ALUTECH
GROUP OF COMPANIES

Profile systems

ALUTECH ALT W62

Window and door system

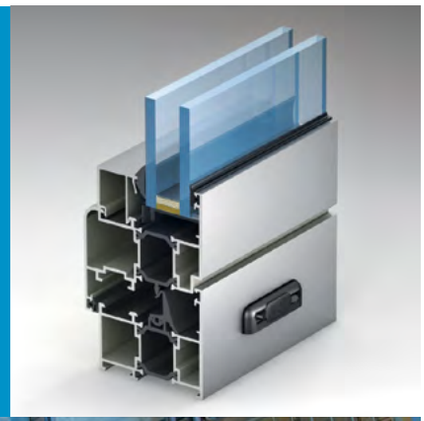

ALUTECH ALT W62
WINDOW
AND DOOR SYSTEM

CONTENTS

ALUTECH ALT W62
WINDOW
AND DOOR SYSTEM

SYSTEM DESCRIPTION

01

Information icons

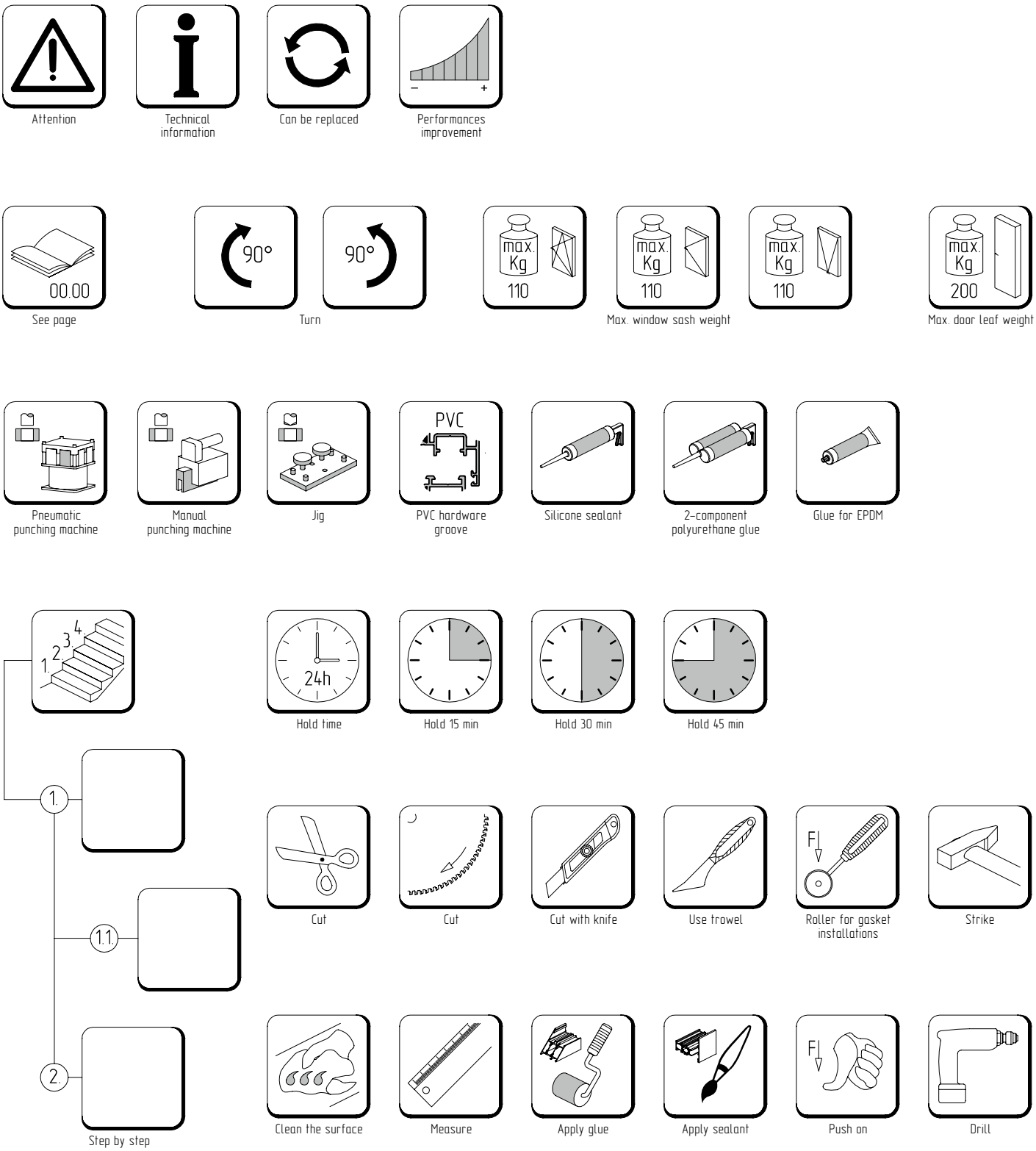

W62 window series

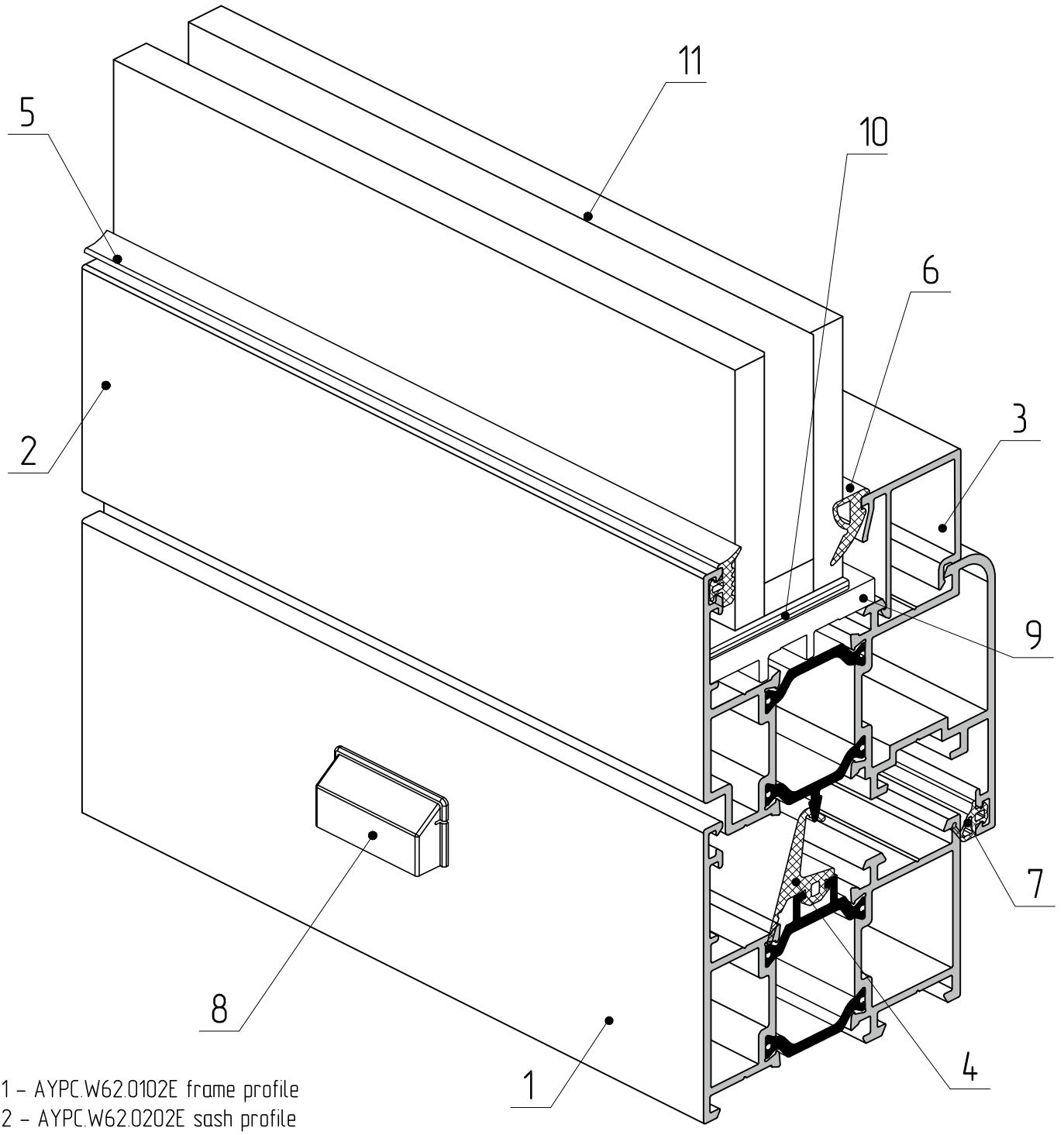

1 – AYPC.W62.0102E frame profile
2 – AYPC.W62.0202E sash profile
3 – AYPC.C48.0606 glass bead profile
4 – FRK51 rubber gasket
5 – FRK29-01 rubber gasket
6 – FRK36 rubber gasket
7 – FRK98 rubber gasket
8 – AYPC.C48.0919M drain plug
9 – AYPC.W62.0901M bearing support
10 – 100x32x1 (100x32x3) kit of leveling supports
11 – 24 mm infill unit

W62 door series

1 – AYPC.W62.0104E door frame profile
2 – AYPC.W62.0204E door leaf profile
3 – AYPC.C48.0606 glass bead profile
4 – AYPC.W62.0801E threshold profile
5 – AYPC.C48.0618 door adjoining profile
6 – PB048.0750-FP felt sealant
7 – FRK07 rubber gasket
8 – FRK29-01 rubber gasket
9 – FRK36 rubber gasket
10 – AYPC.W62.0901M bearing support
11 – 100x32x1 (100x32x3) kit of leveling supports
12 – 24 mm infill unit

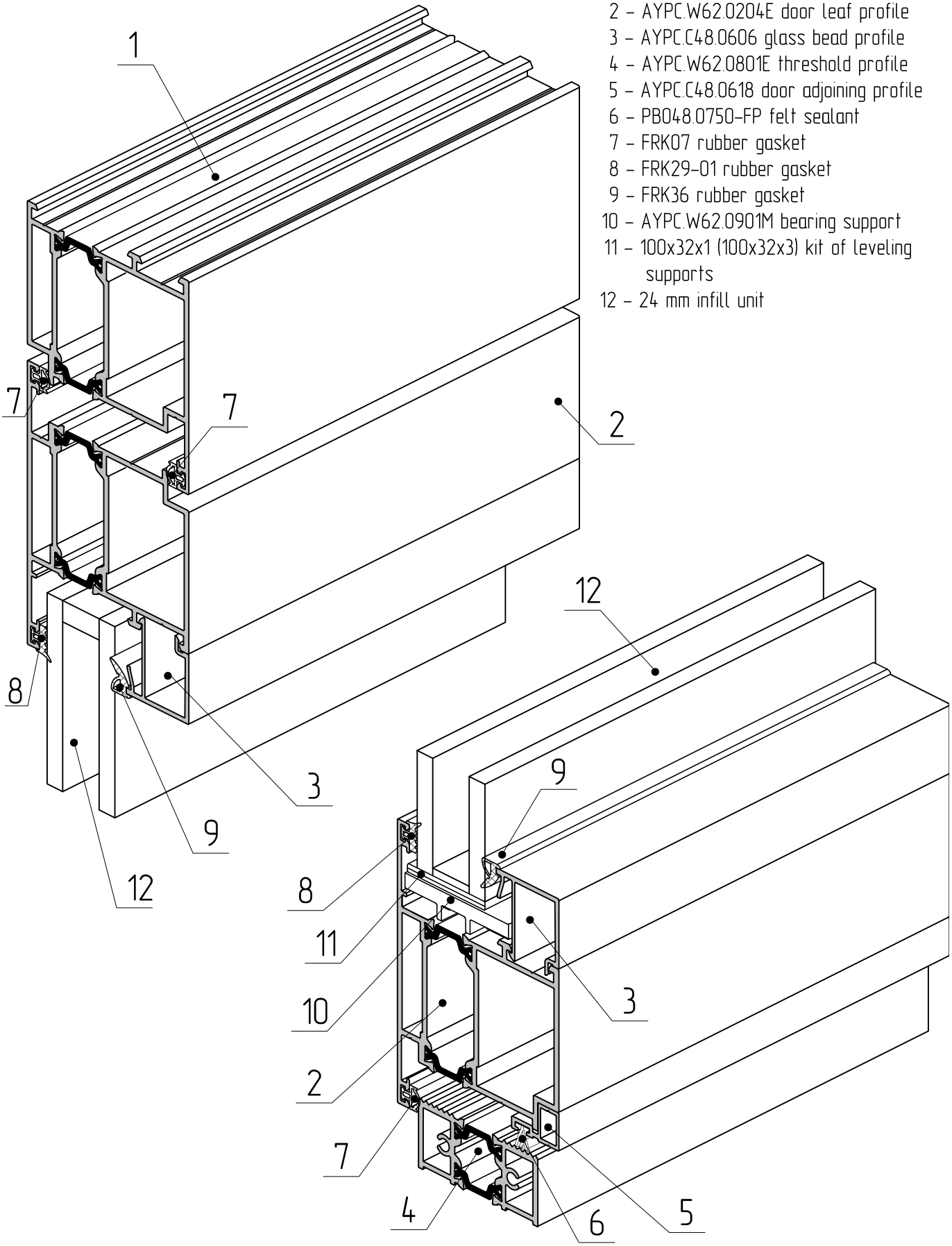

ORDER INFORMATION

02

Article	Name / Drawing	Weight, kg/rm	Exterior perimeter, mm	Cross sectional area, mm²	Code	Profile colour	Bar lenght, rm	Quantity in pack		Weight of a pack	
								pcs	rm	net, kg	gross, kg
AYPC.W62.0101E	Frame profile 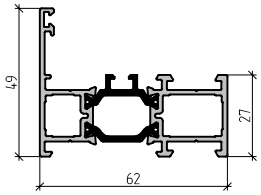	1,209	345	518,8	10860100 10860121 10860124 10860130 10860131 10860808	00 RAL9016 RAL8014 RAL8017 RAL9006 A00-D6	6,5	6	39	47,2 49,2 49,2 49,2 49,2 47,2	47,8 50,5 50,5 50,5 50,5 47,8
AYPC.W62.0102E	Frame profile 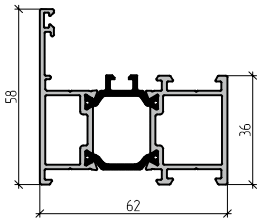	1,381	364	583,1	10860200 10860221 10860224 10860230 10860231 108602808	00 RAL9016 RAL8014 RAL8017 RAL9006 A00-D6	6,5	4	26	35,9 37,3 37,3 37,3 37,3 35,9	36,5 38,8 38,8 38,8 38,8 36,5
AYPC.W62.0103E	Frame profile 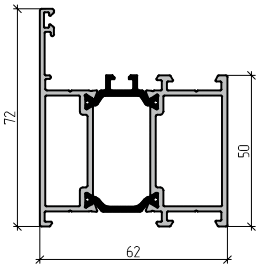	1,7	392	701,8	10861100 10861121 10861124 10861130 10861131 108611808	00 RAL9016 RAL8014 RAL8017 RAL9006 A00-D6	6,5	4	26	44,3 45,8 45,8 45,8 45,8 44,3	44,9 47,6 47,6 47,6 47,6 44,9
AYPC.W62.0104E	Frame profile 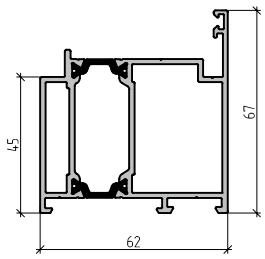	1,72	324	685,6	10860300 10860321 10860324 10860330 10860331 108603808	00 RAL9016 RAL8014 RAL8017 RAL9006 A00-D6	6,5	4	26	44,7 46,0 46,0 46,0 46,0 44,7	45,4 47,8 47,8 47,8 47,8 45,4
AYPC.W62.0105E	Frame profile 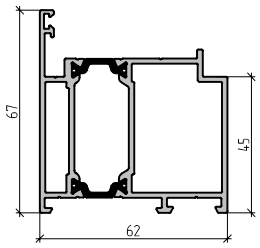	1,72	324	685,6	10861200 10861221 10861224 10861230 10861231 108612808	00 RAL9016 RAL8014 RAL8017 RAL9006 A00-D6	6,5	4	26	44,7 46,0 46,0 46,0 46,0 44,7	45,4 47,8 47,8 47,8 47,8 45,4

Article	Name / Drawing	Weight, kg/rm	Exterior perimeter, mm	Cross sectional area, mm²	Code	Profile colour	Bar lenght, rm	Quantity in pack		Weight of a pack	
								pcs	rm	net, kg	gross, kg
AYPC.W62.0106E	Frame profile 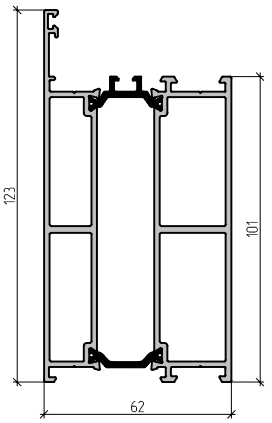	2,92	474	1171,5	10861300 10861321 10861324 10861330 10861331 108613808	00 RAL9016 RAL8014 RAL8017 RAL9006 A00-D6	6,5	2	13	38,0 38,9 38,9 38,9 38,9 38,0	38,6 41,9 41,9 41,9 41,9 38,6
AYPC.W62.0107E	Frame profile 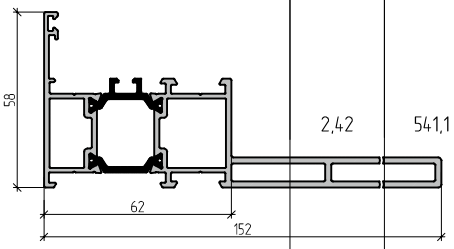	2,42	541,1	967,2	10862800 10862821 10862824 10862830 10862831 108628808	00 RAL9016 RAL8014 RAL8017 RAL9006 A00-D6	6,5	2	13	31,5 32,5 32,5 32,5 32,5 31,5	32,3 33,3 33,3 33,3 33,3 32,3
AYPC.W62.0815E	Frame profile 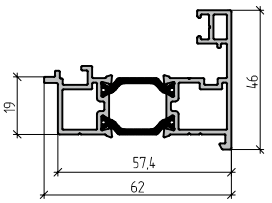	1,14	294	480,1	10864400 10864421 10864424 10864430 10864431 108644808	00 RAL9016 RAL8014 RAL8017 RAL9006 A00-D6	6,5	4	26	29,6 30,5 30,5 30,5 30,5 29,6	30,2 31,1 31,1 31,1 31,1 30,2
AYPC.W62.0121E	Widener profile 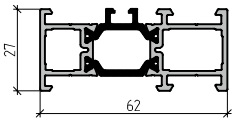	1,1	285	480,7	10864100 10864121 10864124 10864130 10864131 108641808	00 RAL9016 RAL8014 RAL8017 RAL9006 A00-D6	6,5	4	26	28,6 29,5 29,5 29,5 29,5 28,6	29,2 30,1 30,1 30,1 30,1 29,2
AYPC.W62.0122E	Widener profile 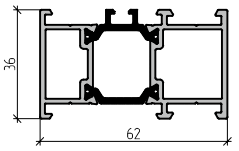	1,27	304	544,8	10864200 10864221 10864224 10864230 10864231 108642808	00 RAL9016 RAL8014 RAL8017 RAL9006 A00-D6	6,5	4	26	33,1 34,1 34,1 34,1 34,1 33,1	33,9 34,9 34,9 34,9 34,9 33,9

Article	Name / Drawing	Weight, kg/rm	Exterior perimeter, mm	Cross sectional area, mm²	Code	Profile colour	Bar lenght, rm	Quantity in pack		Weight of a pack	
								pcs	rm	net, kg	gross, kg
AYPC.W62.0123E	Widener profile 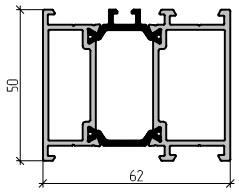	1,59	332,9	661,9	10864300 10864321 10864324 10864330 10864331 108643808	00 RAL9016 RAL8014 RAL8017 RAL9006 A00-D6	6,5	4	26	41,4 42,5 42,5 42,5 42,5 41,4	42,5 43,5 43,5 43,5 43,5 42,5
AYPC.W62.0201E	Sash profile 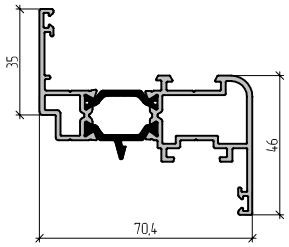	1,376	401	575,4	10861400 10861421 10861424 10861430 10861431 108614808	00 RAL9016 RAL8014 RAL8017 RAL9006 A00-D6	6,5	4	26	35,8 37,3 37,3 37,3 37,3 35,8	36,4 38,8 38,8 38,8 38,8 36,4
AYPC.W62.0202E	Sash profile 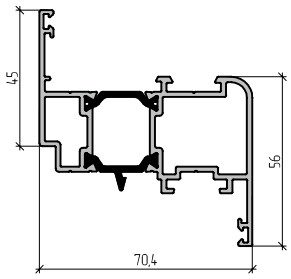	1,616	421	667,1	10860400 10860421 10860424 10860430 10860431 108604808	00 RAL9016 RAL8014 RAL8017 RAL9006 A00-D6	6,5	4	26	42,0 43,7 43,7 43,7 43,7 42,0	42,7 45,4 45,4 45,4 45,4 42,7
AYPC.W62.0203E	Sash profile 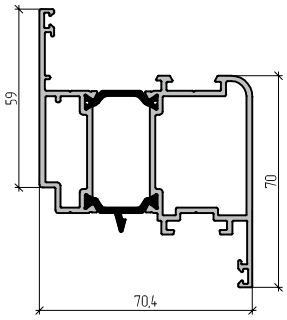	1,98	441	800,6	10862900 10862921 10862924 10862930 10862931 108629808	00 RAL9016 RAL8014 RAL8017 RAL9006 A00-D6	6,5	2	13	25,8 26,8 26,8 26,8 26,8 25,8	26,6 27,6 27,6 27,6 27,6 26,6
AYPC.W62.0204E	Door leaf profile 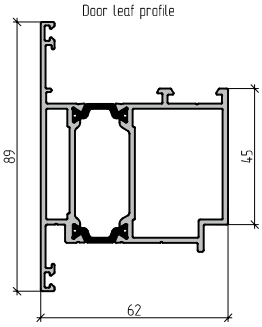	1,84	384	730,8	10860500 10860521 10860524 10860530 10860531 108605808	00 RAL9016 RAL8014 RAL8017 RAL9006 A00-D6	6,5	4	26	47,8 49,3 49,3 49,3 49,3 47,8	48,7 51,3 51,3 51,3 51,3 48,7

Article	Name / Drawing	Weight, kg/rm	Exterior perimeter, mm	Cross sectional area, mm²	Code	Profile colour	Bar lenght, rm	Quantity in pack		Weight of a pack	
								pcs	rm	net, kg	gross, kg
AYPC.W62.0205E	Door leaf profile 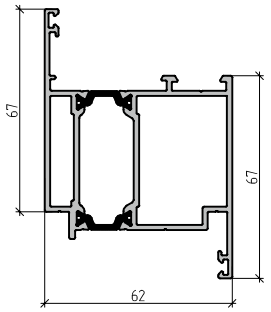	1,84	384	730,8	10860600 10860621 10860624 10860630 10860631 108606808	00 RAL9016 RAL8014 RAL8017 RAL9006 A00-D6	6,5	4	26	47,8 49,3 49,3 49,3 49,3 47,8	48,7 51,3 51,3 51,3 51,3 47,8
AYPC.W62.0211E	Sash profile 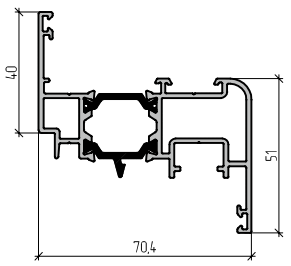	1,515	418	553,6	10865100 10865121 10865124 10865130 10865131 108651808	00 RAL9016 RAL8014 RAL8017 RAL9006 A00-D6	6,5	2	13	19,7 20,5 20,5 20,5 20,5 19,7	20,1 21,3 21,3 21,3 21,3 20,1
AYPC.W62.0212E	Sash profile 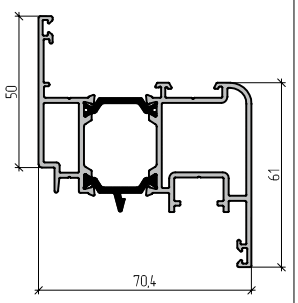	1,753	438	713,6	10865200 10865221 10865224 10865230 10865231 108652808	00 RAL9016 RAL8014 RAL8017 RAL9006 A00-D6	6,5	2	13	22,8 23,7 23,7 23,7 23,7 22,8	23,7 24,7 24,7 24,7 24,7 23,7
AYPC.W62.0214E	Door leaf profile 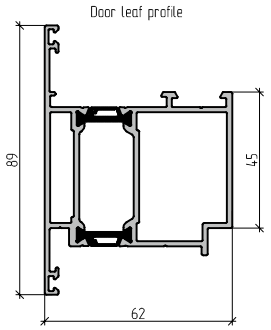	1,88	384	751,0	10863900 10863921 10863924 10863930 10863931 108639808	00 RAL9016 RAL8014 RAL8017 RAL9006 A00-D6	6,5	4	26	48,9 50,1 50,1 50,1 50,1 48,9	50,3 51,5 51,5 51,5 51,5 50,3
AYPC.W62.0215E	Door leaf profile 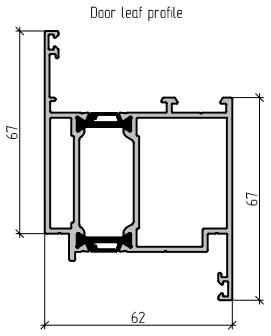	1,88	384	751,0	10864000 10864021 10864024 10864030 10864031 108640808	00 RAL9016 RAL8014 RAL8017 RAL9006 A00-D6	6,5	4	26	48,9 50,1 50,1 50,1 50,1 48,9	50,0 51,3 51,3 51,3 51,3 50,0

Article	Name / Drawing	Weight, kg/rm	Exterior perimeter, mm	Cross sectional area, mm²	Code	Profile colour	Bar lenght, rm	Quantity in pack		Weight of a pack	
								pcs	rm	net, kg	gross, kg
AYPC.W62.0221E	Sash profile 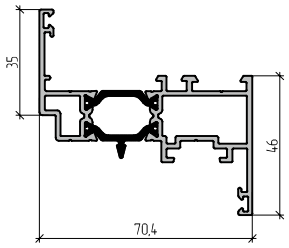	1,426	418	584,1	10865300 10865321 10865324 10865330 10865331 108653808	00 RAL9016 RAL8014 RAL8017 RAL9006 A00-D6	6,5	4	26	37,1 38,7 38,7 38,7 38,7 37,1	37,8 40,3 40,3 40,3 40,3 37,8
AYPC.W62.0222E	Sash profile 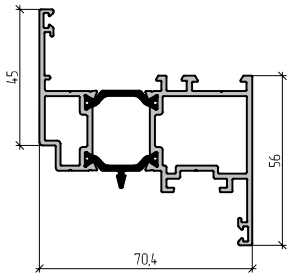	1,666	436	675,5	10865400 10865421 10865424 10865430 10865431 108654808	00 RAL9016 RAL8014 RAL8017 RAL9006 A00-D6	6,5	4	26	43,3 45,0 45,0 45,0 45,0 43,3	44,2 46,8 46,8 46,8 46,8 44,2
AYPC.W62.0223E	Sash profile 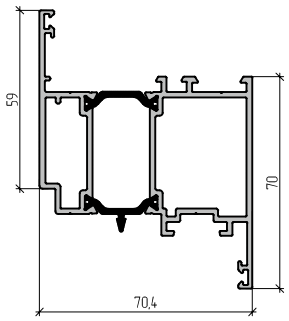	2,035	463	808,4	10865500 10865521 10865524 10865530 10865531 108655808	00 RAL9016 RAL8014 RAL8017 RAL9006 A00-D6	6,5	2	13	26,5 27,4 27,4 27,4 27,4 26,5	27,0 28,5 28,5 28,5 28,5 27,0
AYPC.W62.0301E	Transom bar profile 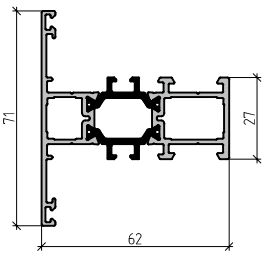	1,353	430	583,6	10860700 10860721 10860724 10860730 10860731 108607808	00 RAL9016 RAL8014 RAL8017 RAL9006 A00-D6	6,5	4	26	35,2 36,9 36,9 36,9 36,9 35,2	35,8 38,3 38,3 38,3 38,3 35,8
AYPC.W62.0302E	Transom bar profile 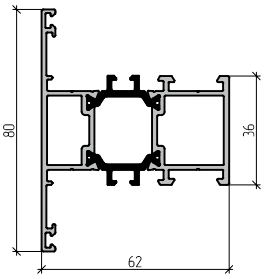	1,529	448	647,9	10860800 10860821 10860824 10860830 10860831 108608808	00 RAL9016 RAL8014 RAL8017 RAL9006 A00-D6	6,5	4	26	39,8 41,5 41,5 41,5 41,5 39,8	40,6 43,1 43,1 43,1 43,1 40,6

Article	Name / Drawing	Weight, kg/rm	Exterior perimeter, mm	Cross sectional area, mm²	Code	Profile colour	Bar lenght, rm	Quantity in pack		Weight of a pack	
								pcs	rm	net, kg	gross, kg
AYPC.W62.0303E	Transom bar profile 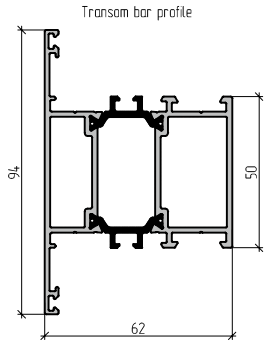	1,85	476	766,6	10861500 10861521 10861524 10861530 10861531 108615808	00 RAL9016 RAL8014 RAL8017 RAL9006 A00-D6	6,5	4	26	48,1 50,0 50,0 50,0 50,0 48,1	48,9 51,9 51,9 51,9 51,9 48,9
AYPC.W62.0304E	Transom bar profile 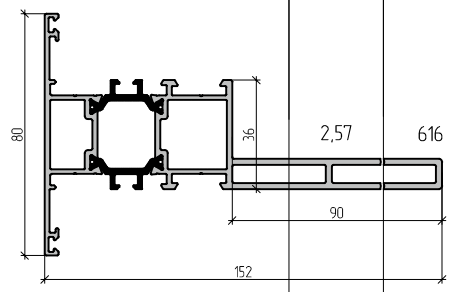	2,57	616	1032,1	10863000 10863021 10863024 10863030 10863031 108630808	00 RAL9016 RAL8014 RAL8017 RAL9006 A00-D6	6,5	2	13	33,4 34,7 34,7 34,7 34,7 33,4	34,4 35,7 35,7 35,7 35,7 34,4
AYPC.W62.0305E	Transom bar profile 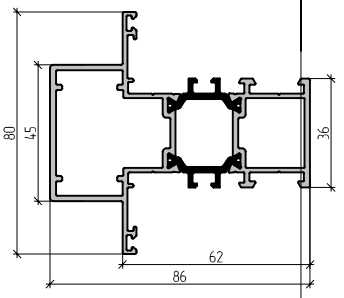	1,91	488	787,6	10863100 10863121 10863124 10863130 10863131 108631808	00 RAL9016 RAL8014 RAL8017 RAL9006 A00-D6	6,5	2	13	24,8 25,7 25,7 25,7 25,7 24,8	25,5 26,6 26,6 26,6 26,6 25,5
AYPC.W62.0306E	Transom bar profile 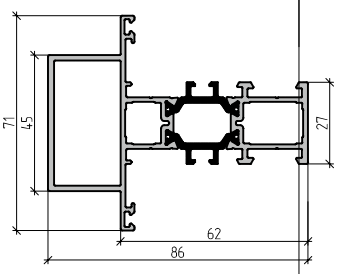	1,81	472	761,9	10863700 10863721 10863724 10863730 10863731 108637808	00 RAL9016 RAL8014 RAL8017 RAL9006 A00-D6	6,5	4	26	47,1 48,8 48,8 48,8 48,8 47,1	48,4 50,5 50,5 50,5 50,5 48,4
AYPC.W62.0307E	Transom bar profile 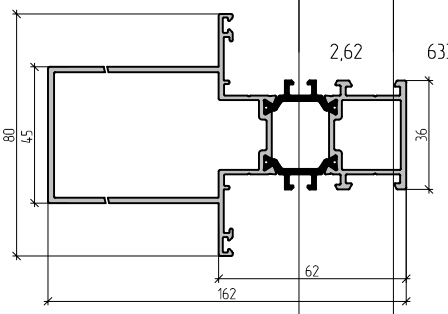	2,62	633	1051,5	10863500 10863521 10863524 10863530 10863531 108635808	00 RAL9016 RAL8014 RAL8017 RAL9006 A00-D6	6,5	2	13	34,1 35,0 35,0 35,0 35,0 34,1	34,9 35,9 35,9 35,9 35,9 34,9

Article	Name / Drawing	Weight, kg/rm	Exterior perimeter, mm	Cross sectional area, mm²	Code	Profile colour	Bar lenght, rm	Quantity in pack		Weight of a pack	
								pcs	rm	net, kg	gross, kg
AYPC.W62.0308E	Transom bar profile 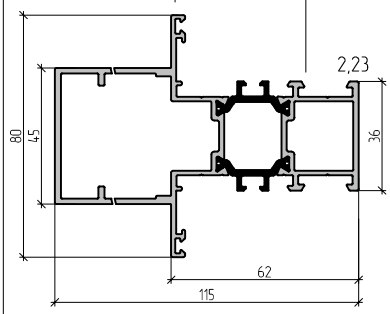	2,23	546	908,3	10863800 10863821 10863824 10863830 10863831 108638808	00 RAL9016 RAL8014 RAL8017 RAL9006 A00-D6	6,5	2	13	29,0 29,8 29,8 29,8 29,8 29,0	29,8 30,6 30,6 30,6 30,6 29,8
AYPC.W62.0321E	Transom bar profile 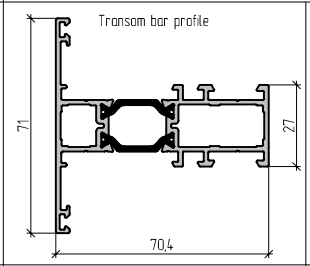	1,436	426	588,1	10865600 10865621 10865624 10865630 10865631 108656808	00 RAL9016 RAL8014 RAL8017 RAL9006 A00-D6	6,5	4	26	37,3 39,0 39,0 39,0 39,0 37,3	38,1 40,6 40,6 40,6 40,6 38,1
AYPC.W62.0501E	Double casement profile 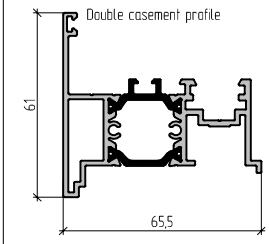	1,411	404	592,3	10861600 10861621 10861624 10861630 10861631 108616808	00 RAL9016 RAL8014 RAL8017 RAL9006 A00-D6	6,5	4	26	36,7 38,3 38,3 38,3 38,3 36,7	37,5 39,8 39,8 39,8 39,8 37,5
AYPC.W62.0502E	Double casement profile 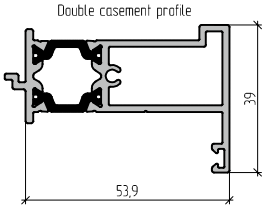	1,04	246	437,7	10861700 10861721 10861724 10861730 10861731 108617808	00 RAL9016 RAL8014 RAL8017 RAL9006 A00-D6	6,5	4	26	27,3 28,3 28,3 28,3 28,3 27,3	28,1 29,4 29,4 29,4 29,4 28,1
AYPC.W62.0602	Glass bead profile 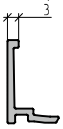	0,17	75,1	63,1	10804500 10804521 10804524 10804530 10804531 108045808	00 RAL9016 RAL8014 RAL8017 RAL9006 A00-D6	6,5	12	78	13,3 14,0 14,0 14,0 14,0 13,3	13,6 14,3 14,3 14,3 14,3 13,6
AYPC.W62.0603	Glass bead profile 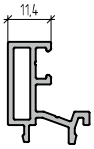	0,372	133,2	137,8	10804600 10804621 10804624 10804630 10804631 108046806	00 RAL9016 RAL8014 RAL8017 RAL9006 A00-E6	6,5	12	78	29,0 30,3 30,3 30,3 30,3 29,0	29,5 30,8 30,8 30,8 30,8 29,5
AYPC.W62.0604	Glass bead profile 	0,104	50,8	38,6	10804700	00	6,5	8	52	5,4	5,5

Article	Name / Drawing	Weight, kg/rm	Exterior perimeter, mm	Cross sectional area, mm²	Code	Profile colour	Bar lenght, rm	Quantity in pack		Weight of a pack	
								pcs	rm	net, kg	gross, kg
AYPC.W62.0701	Transom bar fastening profile 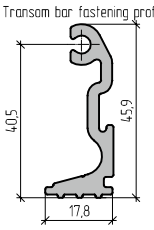	0,688	161	253,8	10801000	00	3,25	12	39	26,8	27,1
AYPC.W62.0801E	Threshold profile 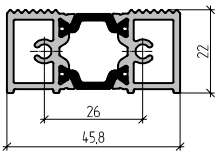	0,954	147	402,1	10860900 108609806	00 A00-E6	6,5	6	39	37,2	37,7
AYPC.W62.0802	Threshold profile 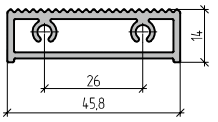	0,665	246,5	246,5	10801800 108018806	00 A00-E6	6,5	8	52	34,6	35,4
AYPC.W62.0803E	Door adjoining profile 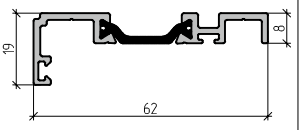	0,545	231	240,8	10861900 10861921 10861924 10861930 10861931 108619806	00 RAL9016 RAL8014 RAL8017 RAL9006 A00-E6	6,5	8	52	28,3 30,1 30,1 30,1 30,1 28,3	29,1 30,7 30,7 30,7 30,7 29,1
AYPC.W62.0804	Thermal compensation profile 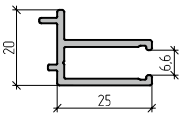	0,355	152	131,4	10802000 10802021 10802024 10802030 10802031 108020808	00 RAL9016 RAL8014 RAL8017 RAL9006 A00-D6	6,5	12	78	27,7 29,5 29,5 29,5 29,5 27,7	28,5 29,9 29,9 29,9 29,9 28,5
AYPC.W62.0805E	Auxiliary door profile 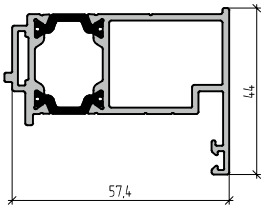	1,176	239	484,3	10862100 10862121 10862124 10862130 10862131 108621808	00 RAL9016 RAL8014 RAL8017 RAL9006 A00-D6	6,5	4	26	30,6 31,5 31,5 31,5 31,5 30,6	31,3 32,7 32,7 32,7 32,7 31,3
AYPC.W62.0806E	Connecting profile 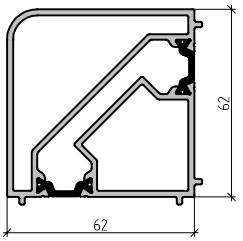	2,096	259	824,1	10862200 10862221 10862224 10862230 10862231 108622808	00 RAL9016 RAL8014 RAL8017 RAL9006 A00-D6	6,5	2	13	27,2 27,8 27,8 27,8 27,8 27,2	28,0 30,0 30,0 30,0 30,0 28,0

Article	Name / Drawing	Weight, kg/rm	Exterior perimeter, mm	Cross sectional area, mm²	Code	Profile colour	Bar lenght, rm	Quantity in pack		Weight of a pack	
								pcs	rm	net, kg	gross, kg
AYPC.W62.0807E	Connecting profile 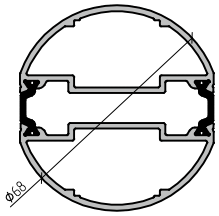	1,872	213	741,9	10862300 10862321 10862324 10862330 10862331 108623808	00 RAL9016 RAL8014 RAL8017 RAL9006 A00-D6	6,5	2	13	24,3 24,7 24,7 24,7 24,7 24,3	25,1 26,7 26,7 26,7 26,7 25,1
AYPC.W62.0808	Rotary clip profile 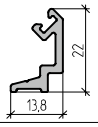	0,223	87	82,6	10802400 10802421 10802424 10802430 10802431 108024806	00 RAL9016 RAL8014 RAL8017 RAL9006 A00-E6	6,5	12	78	17,4 18,4 18,4 18,4 18,4 17,4	18,2 18,7 18,7 18,7 18,7 18,2
AYPC.W62.0809	Rotary clip profile 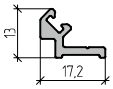	0,168	75	62,2	10802500 10802521 10802524 10802530 10802531 108025806	00 RAL9016 RAL8014 RAL8017 RAL9006 A00-E6	6,5	12	78	13,1 14,0 14,0 14,0 14,0 13,1	13,9 14,2 14,2 14,2 14,2 13,9
AYPC.W62.0811E	Connecting profile 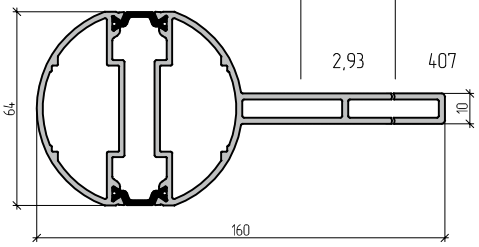	2,93	407	1137,5	10863200 10863221 10863224 10863230 10863231 108632808	00 RAL9016 RAL8014 RAL8017 RAL9006 A00-D6	6,5	2	13	38,1 38,8 38,8 38,8 38,8 38,1	38,6 39,3 39,3 39,3 39,3 38,6
AYPC.W62.0812E	Connecting profile 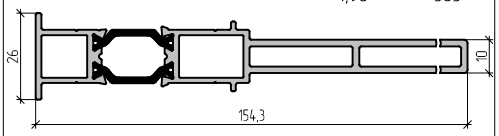	1,98	383	796,1	10863300 10863321 10863324 10863330 10863331 108633808	00 RAL9016 RAL8014 RAL8017 RAL9006 A00-D6	6,5	2	13	25,7 26,3 26,3 26,3 26,3 25,7	26,4 27,1 27,1 27,1 27,1 26,4
AYPC.C48.0614	Leveling profile 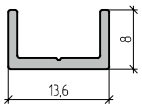	0,097	55,4	35,8	10402700	00	6,5	8	52	5,0	5,1
AYPC.C48.0615	Flange profile 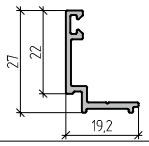	0,210	108,5	77,6	10402800 10402821 10402824 10402830 10402831	00 RAL9016 RAL8014 RAL8017 RAL9006	6,5	12	78	16,4 17,7 17,7 17,7 17,7	16,8 18,1 18,1 18,1 18,1
AYPC.110.0702	Reinforcing profile 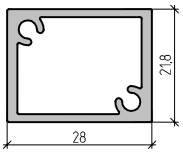	0,49	99,0	181,2	10203100	00	3,1	12	37,2	18,2	18,5

Article	Name / Drawing	Weight, kg/rm	Exterior perimeter, mm	Cross sectional area, mm²	Code	Profile colour	Bar lenght, rm	Quantity in pack		Weight of a pack	
								pcs	rm	net, kg	gross, kg
AYPC.C48.0602	Glass bead profile 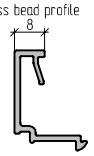	0,23	117	85,1	10405800 10405821 10405824 10405830 10405831 104058808	00 RAL9016 RAL8014 RAL8017 RAL9006 A00-D6	6,5	18	117	26,9 30,2 30,2 30,2 30,2 26,9	27,4 30,7 30,7 30,7 30,7 27,4
AYPC.C48.0603	Glass bead profile 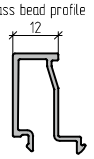	0,251	144,9	93,3	10401700 10401721 10401724 10401730 10401731 104017808	00 RAL9016 RAL8014 RAL8017 RAL9006 A00-D6	6,5	18	117	29,4 31,3 31,3 31,3 31,3 29,4	29,9 31,8 31,8 31,8 31,8 29,9
AYPC.C48.0604	Glass bead profile 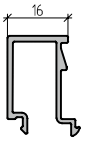	0,278	149,5	103,1	10401800 10401821 10401824 10401830 10401831 104018808	00 RAL9016 RAL8014 RAL8017 RAL9006 A00-D6	6,5	18	117	32,5 34,4 34,4 34,4 34,4 32,5	33,2 35,1 35,1 35,1 35,1 33,2
AYPC.C48.0605	Glass bead profile 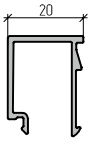	0,279	150,8	103,4	10401900 10401921 10401924 10401930 10401931 104019808	00 RAL9016 RAL8014 RAL8017 RAL9006 A00-D6	6,5	18	117	32,6 34,2 34,2 34,2 34,2 32,6	33,3 34,9 34,9 34,9 34,9 33,3
AYPC.C48.0606	Glass bead profile 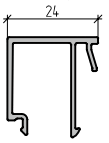	0,307	172,2	113,4	10405400 10405421 10405424 10405430 10405431 104054808	00 RAL9016 RAL8014 RAL8017 RAL9006 A00-D6	6,5	18	117	35,9 37,8 37,8 37,8 37,8 35,9	36,7 38,1 38,1 38,1 38,1 36,7
AYPC.C48.0607	Glass bead profile 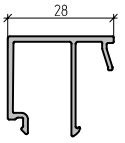	0,322	180,2	119,4	10402000 10402021 10402024 10402030 10402031 104020808	00 RAL9016 RAL8014 RAL8017 RAL9006 A00-D6	6,5	18	117	37,7 39,9 39,9 39,9 39,9 37,9	38,4 40,6 40,6 40,6 40,6 38,4
AYPC.C48.0608	Glass bead profile 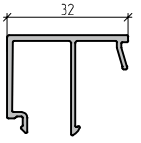	0,339	188,2	125,4	10402100 10402121 10402124 10402130 10402131 104021808	00 RAL9016 RAL8014 RAL8017 RAL9006 A00-D6	6,5	18	117	39,7 41,9 41,9 41,9 41,9 39,7	40,4 42,6 42,6 42,6 42,6 40,4
AYPC.C48.0611	Drain profile 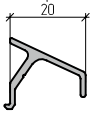	0,184	88,3	68,3	10402400 10402421 10402424 10402430 10402431 104024808	00 RAL9016 RAL8014 RAL8017 RAL9006 A00-D6	6,5	12	78	14,4 15,5 15,5 15,5 15,5 14,4	14,8 15,9 15,9 15,9 15,9 14,8
AYPC.W62.0601	Rod profile 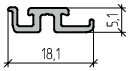	0,116	66,1	43,1	108634806	A00-E6	4	10	40	4,6	4,7
AYPC.C48.0612	Rod profile 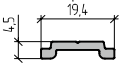	0,136	49,6	50,4	10402500	00	6,5	24	156	21,2	21,3
AYPC.C48.0618	Door adjoining profile 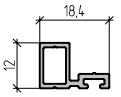	0,163	72,2	60,3	10403100 10403121 10403124 10403130 10403131 104031806	00 RAL9016 RAL8014 RAL8017 RAL9006 A00-E6	6,5	18	117	19,1 20,3 20,3 20,3 20,3 19,1	19,4 20,7 20,7 20,7 20,7 19,4

Article	Name / Drawing	Weight, kg/rm	Exterior perimeter, mm	Cross sectional area, mm²	Code	Profile colour	Bar lenght, rm	Quantity in pack		Weight of a pack	
								pcs	rm	net, kg	gross, kg
AYPC.C48.0702	Corner crimping profile 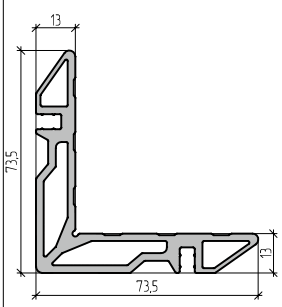	2,103	322,9	776,1	10403600	00	3,25	2	6,5	13,6	13,6
AYPC.C48.0703	Corner crimping profile 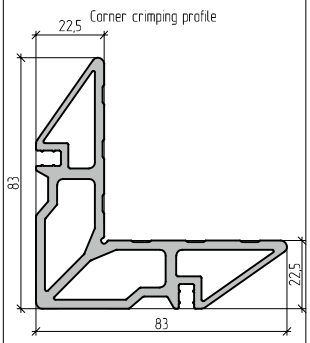	2,822	347,0	1045,3	10403700	00	3,25	2	6,5	18,3	18,3
AYPC.C48.0704	Corner crimping profile 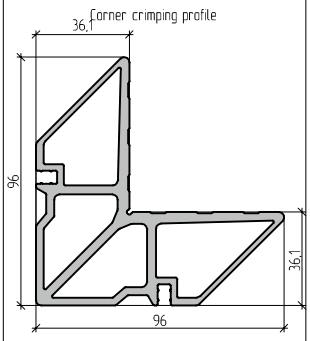	3,816	387,5	1413,6	10403800	00	3,25	2	6,5	24,8	24,8
AYPC.C48.0705	Corner crimping profile 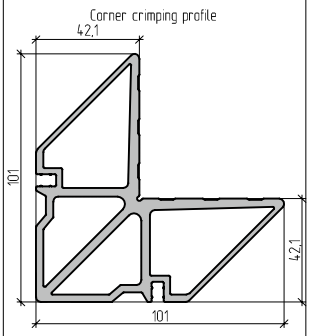	4,09	399,7	1514,9	10403900	00	3,25	2	6,5	26,6	26,6
AYPC.C48.0707	Corner crimping profile 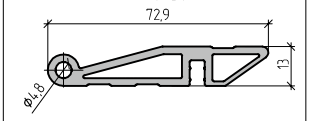	1,07	175,9	396,2	10405600	00	3,25	4	13	13,9	13,9
AYPC.C48.0708	Corner crimping profile 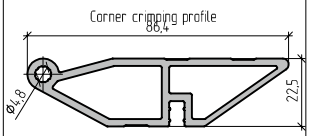	1,384	210,6	512,7	10405700	00	3,25	4	13	17,9	17,9

Article	Name / Drawing	Weight, kg/rm	Exterior perimeter, mm	Cross sectional area, mm²	Code	Profile colour	Bar lenght, rm	Quantity in pack		Weight of a pack	
								pcs	rm	net, kg	gross, kg
AYPC.W50.0703	Corner crimping profile 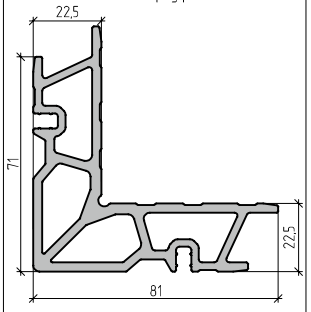	2,982	379,5	1104,1	12402300	00	3,25	2	6,5	19,4	19,5

ALUTECH ALT W62
WINDOW
AND DOOR SYSTEM

ACCESSORIES

03

Image	Code	Article	Weight, kg/rm	Application
	10210600	FRK07	0,031	EPDM rubber gasket. Quantity in pack – 400 rm
	10413200	FRK28	0,106	EPDM rubber gasket. Quantity in pack – 150 rm
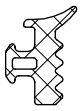	10415900	FRK29-01	0,043	EPDM rubber gasket. Quantity in pack – 400 rm
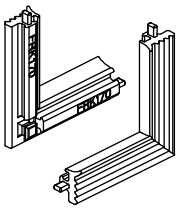	10915200	FRK170	0,003	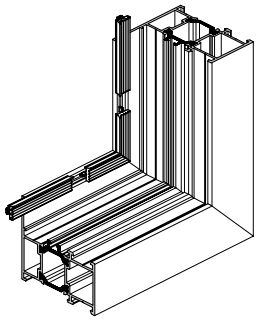 EPDM rubber corner. Quantity in pack – 100 pcs
	11216300	FRK36	0,070	EPDM rubber gasket. Quantity in pack – 250 rm
	10415500	FRK38	0,092	EPDM rubber gasket. Quantity in pack – 400 rm
	10820200	FRK51	0,134	EPDM rubber gasket. Quantity in pack – 120 rm
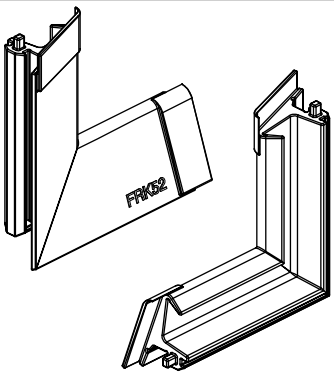	10820300	FRK52	0,013	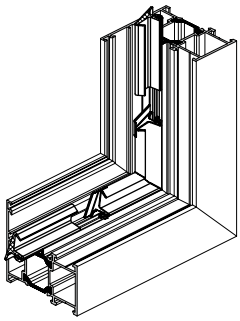 EPDM rubber corner. Quantity in pack – 100 pcs
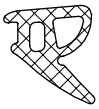	11216600	FRK67	0,110	EPDM rubber gasket. Quantity in pack – 200 rm
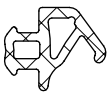	10821000	FRK98	0,029	EPDM rubber gasket. Quantity in pack – 575 rm
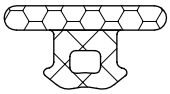	10821100	FRK101	0,001	EPDM/EPDM foam. rubber gasket. Quantity in pack – 350 rm

Image	Code	Article	Weight, kg/rm	Application
	10211300	PB048.0750-FP	0,009	Felt sealant. Quantity in pack – 1000 rm
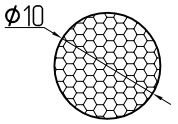	10952300	AYPC.W72.0912	0,031	Sealing rope. Quantity in pack – 45 rm
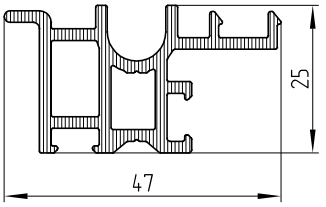	10911700	AYPC.W72.0920	0,431	Universal adapter profile. Quantity in pack – 12 pcs (5,8 rm)
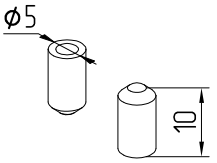	18112400	5x10 DIN6325D	0,001	Pin. Quantity in pack – 100 pcs Can be supplied by Alutech only. Possible to replace by 5x10 DIN6325 pin

Image	Code	Article	Application
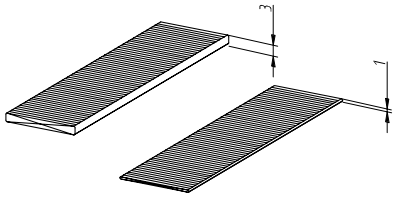	10414600 10414800	100x26x1 100x26x3	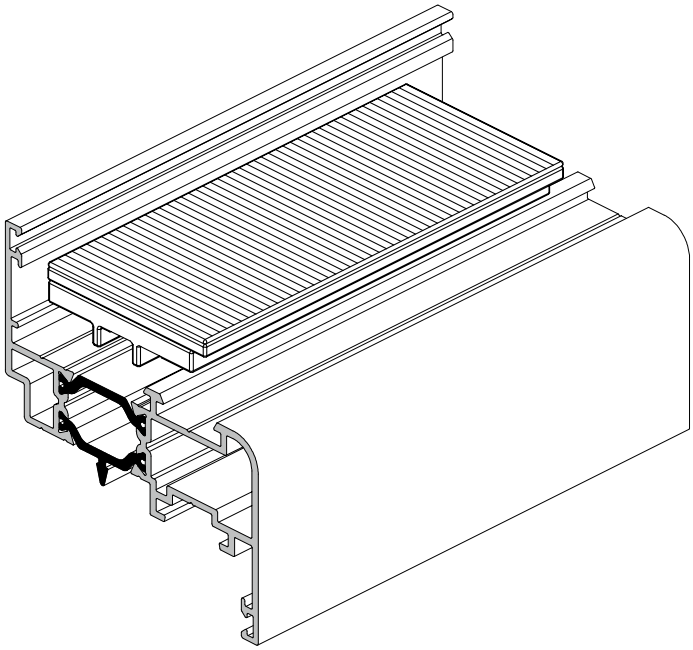 Leveling plate. Quantity in pack – 1000 pcs
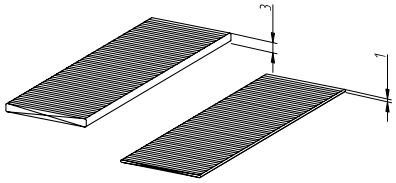	11213400 11213600	100x32x1 100x32x3	
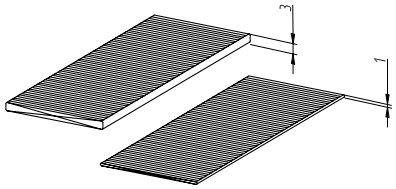	11213700 11213900	100x38x1 100x38x3	
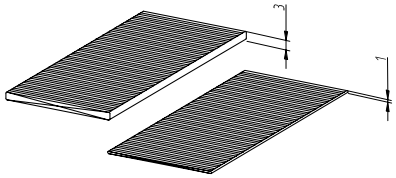	11218100 11218300	100x44x1 100x44x3	
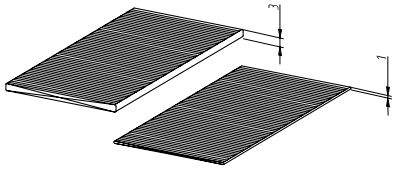	11218400 11218600	100x50x1 100x50x3	
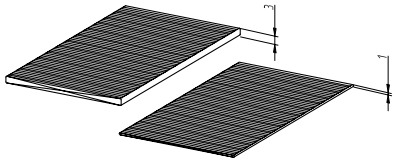	11219100 11219300	100x56x1 100x56x3	

Image	Code	Article	Application
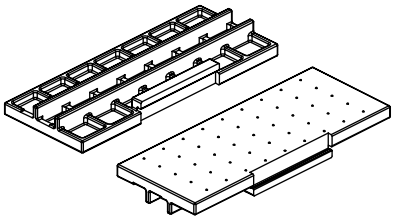	10815800	AYPC.W62.0901M	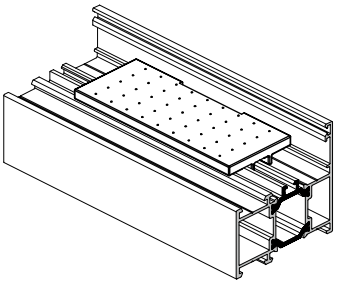 Bearing plate. Quantity in pack – 135 pcs
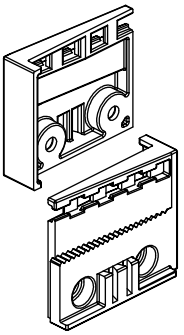	10810200	AYPC.W62.0902	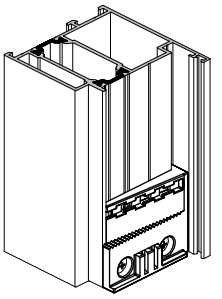 Brush holder kit. Quantity in pack – 20 kits
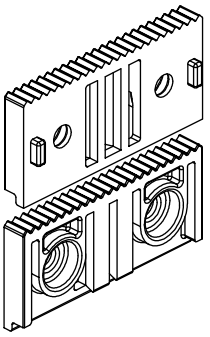	10810400	AYPC.W62.0903	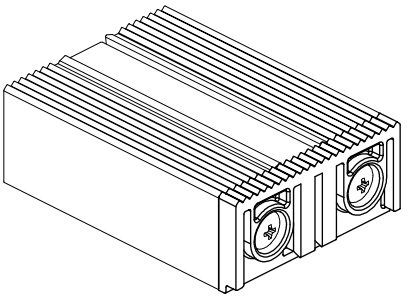 Threshold plug. Quantity in pack – 100 pcs
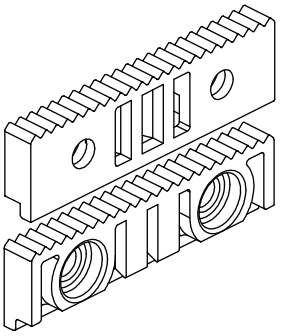	10810500	AYPC.W62.0904	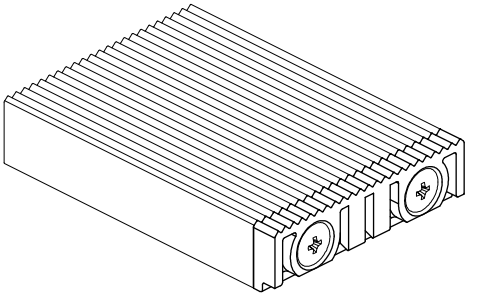 Threshold plug. Quantity in pack – 100 pcs
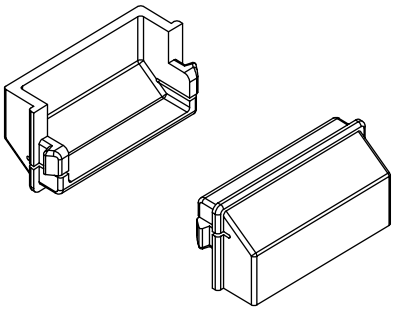	10417600	AYPC.C48.0919M Color: black	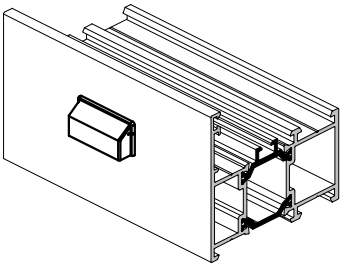 Drain plug. Quantity in pack – 100 pcs
	10417601	AYPC.C48.0919M Color: white	

Image	Code	Article	Application
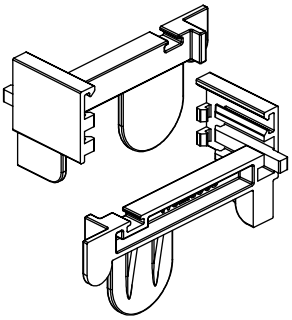	10810600	AYPC.W62.0905	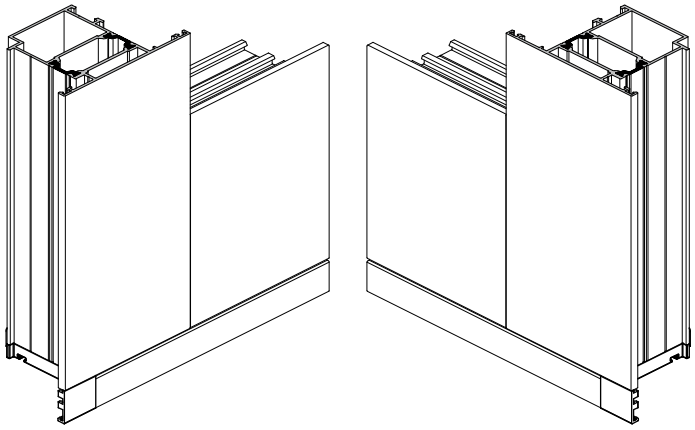 Door adjoining profile plug kit. Quantity in pack – 75 kits
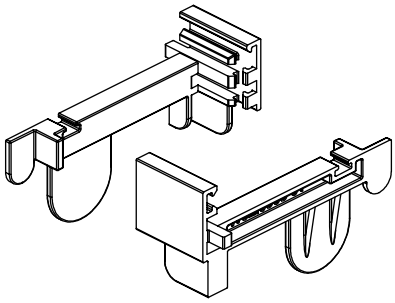		AYPC.W62.0905-01	
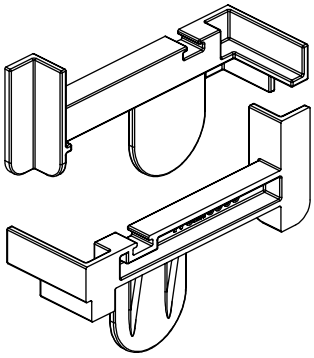	10810800	AYPC.W62.0906	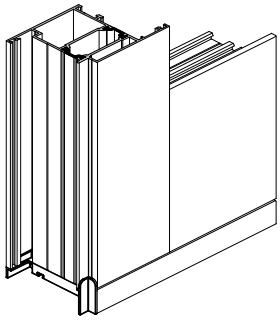 Plug for door adjoining profile. Quantity in pack – 50 pcs
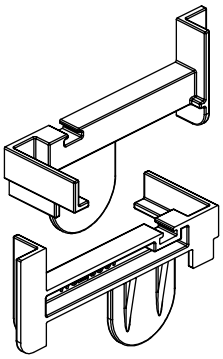	10810900	AYPC.W62.0907	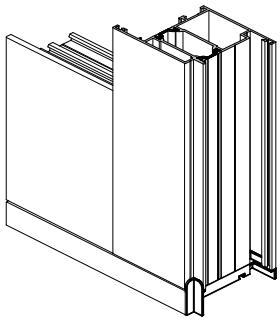 Plug for door adjoining profile. Quantity in pack – 50 pcs
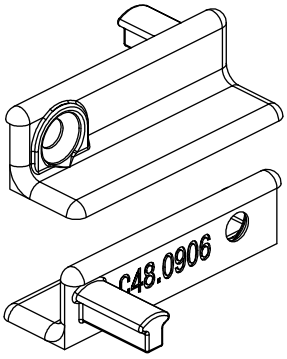	10410400	AYPC.C48.0906	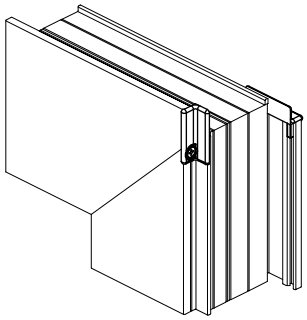 Plug. Quantity in pack – 100 pcs
	10410500	AYPC.C48.0907	

Image	Code	Article	Application
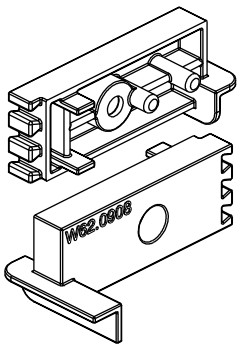	10811000	AYPC.W62.0908	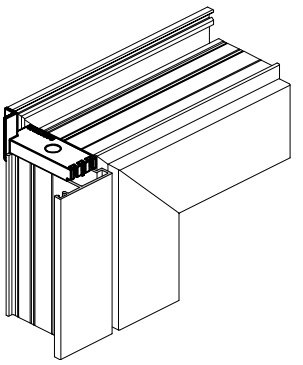
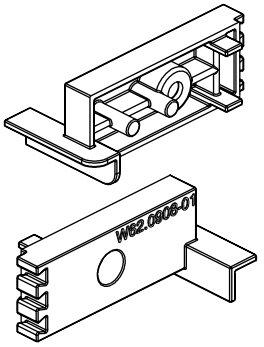		AYPC.W62.0908-01	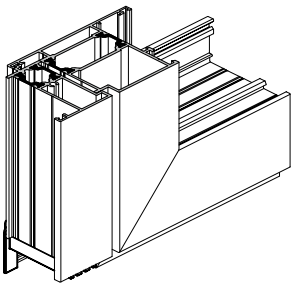 Double casement profile plug kit. Quantity in pack – 25 kits
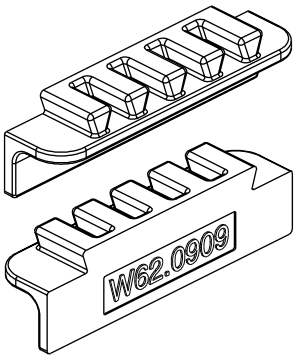	10811200	AYPC.W62.0909	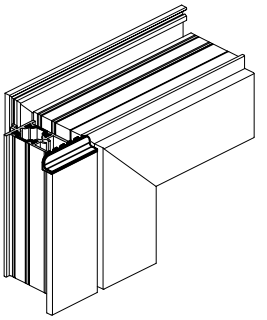 Double casement profile plug. Quantity in pack – 50 pcs
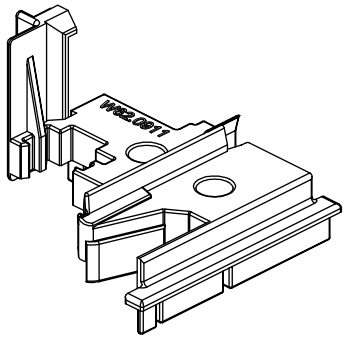	10819100	AYPC.W62.0911	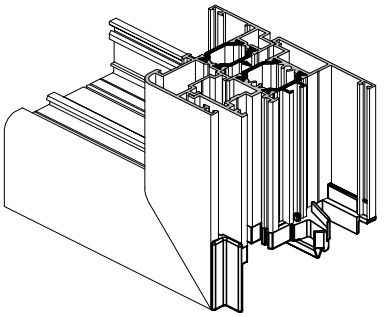
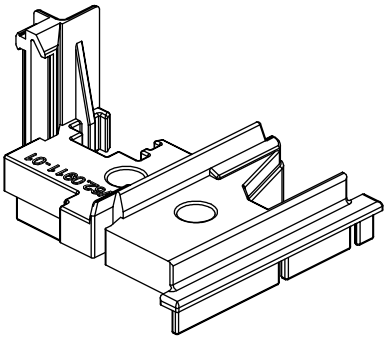		AYPC.W62.0911-01	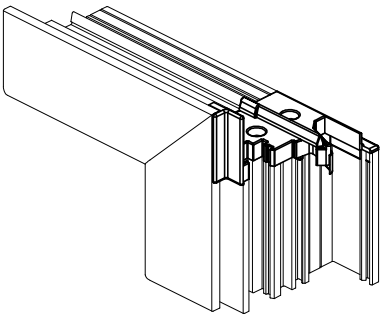 Double casement profile plug kit. Quantity in pack – 25 kits

Image	Code	Article	Application
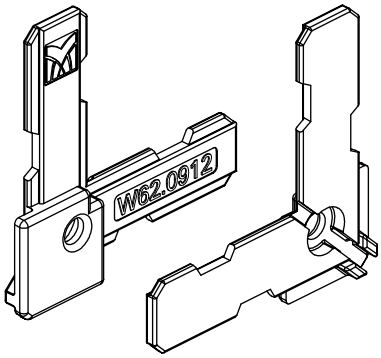	10816900	AYPC.W62.0912	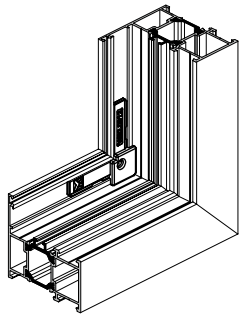 Plastic corner. Quantity in pack – 120 pcs
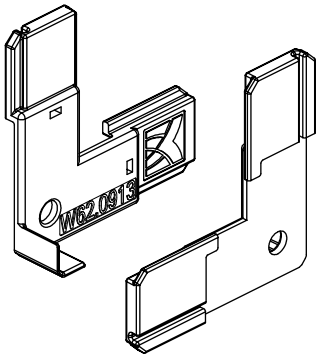	10817000	AYPC.W62.0913	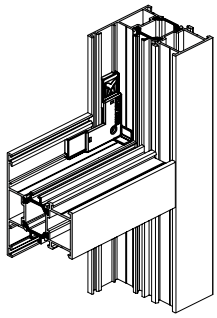 Plastic corner. Quantity in pack – 120 pcs
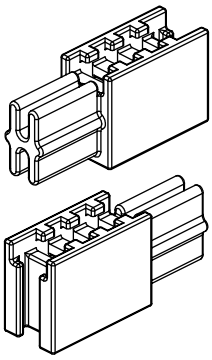	10410700	AYPC.C48.0909	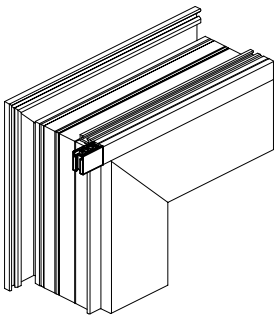 Plug for door adjoining profile. Quantity in pack – 50 pcs
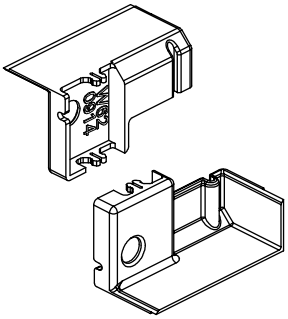	10819000	AYPC.W62.0914	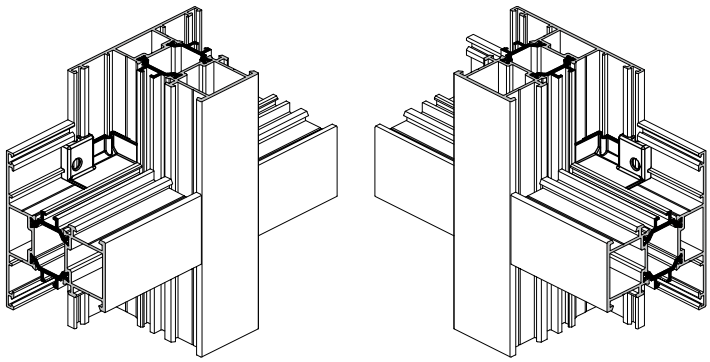 Kit of corner plugs. Quantity in pack – 120 kits
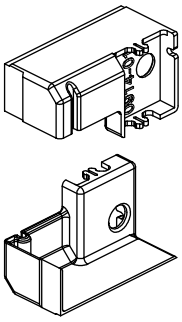		AYPC.W62.0914-01	

Image	Code	Article	Application
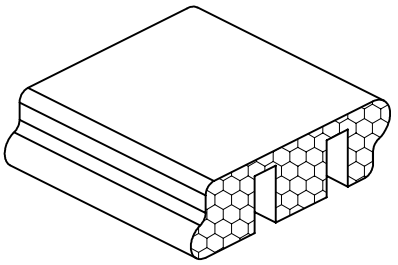	10817100	AYPC.W62.0915	Foamed support. Quantity in pack – 160 pcs 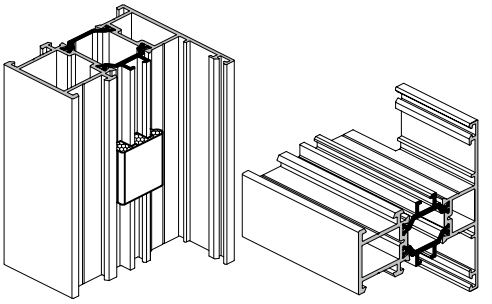 For frame / transom profiles AYPC.W62.0101E, AYPC.W62.0121E / AYPC.W62.0301E, AYPC.W62.0321E
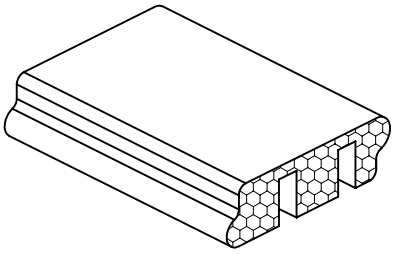	10817200	AYPC.W62.0915-01	Foamed support. Quantity in pack – 160 pcs 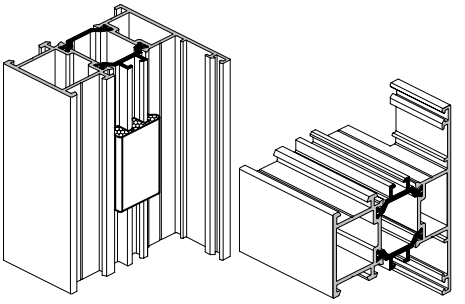 For frame / transom profiles AYPC.W62.0102E, AYPC.W62.0122E / AYPC.W62.0302E
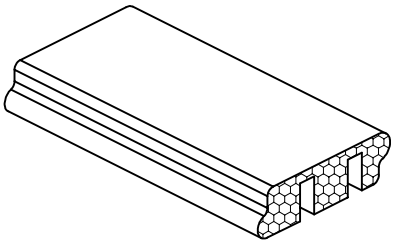	10818400	AYPC.W62.0915-02	Foamed support. Quantity in pack – 160 pcs 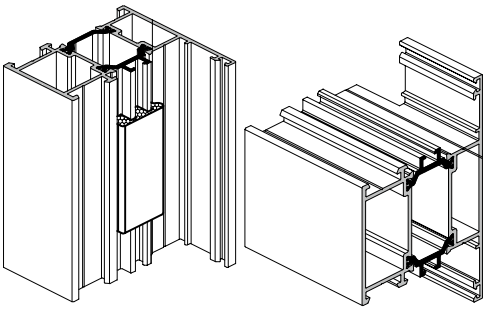 For frame / transom profiles AYPC.W62.0103E, AYPC.W62.0123E / AYPC.W62.0303E
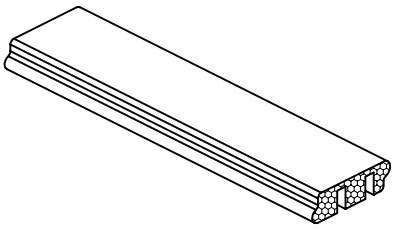	10818500	AYPC.W62.0915-03	Foamed support. Quantity in pack – 90 pcs 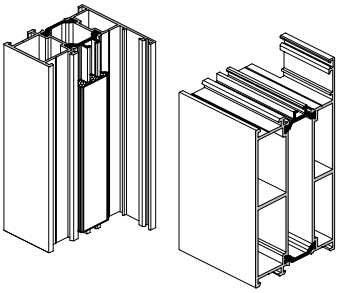 For frame profiles AYPC.W62.0106E

Image	Code	Article	Application
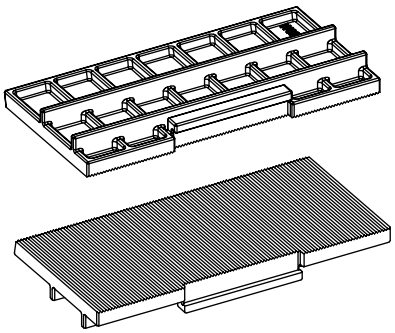	10819200	AYPC.W62.0917	Bearing plate. Quantity in pack – 100 pcs 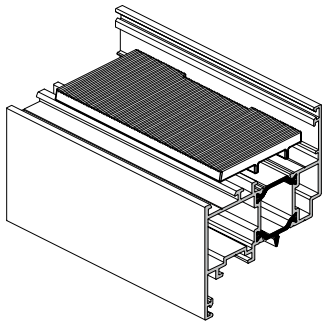 For sash / transom profiles AYPC.W62.0221E, AYPC.W62.0222E, AYPC.W62.0223E / AYPC.W62.0321E
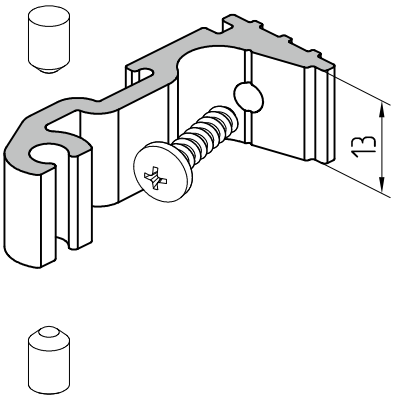	10811500	AYPC.W62.0951	Transom fixing element. Quantity in pack – 200 kits *Kit includes: AYPC.W62.0950 – 1 pcs; screw 3,9x16-A2 DIN7981 – 1 pcs; pin 5x8 DIN6325 – 2 pcs* *Base profile – AYPC.W62.0701* 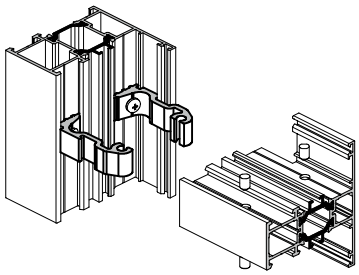 For frame / transom profiles AYPC.W62.0101E, AYPC.W62.0121E / AYPC.W62.0301E, AYPC.W62.0321E
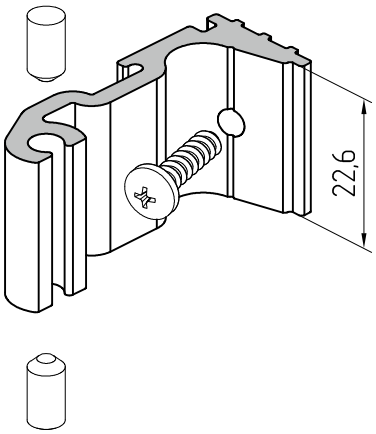	10811600	AYPC.W62.0951-01	Transom fixing element. Quantity in pack – 100 kits *Kit includes: AYPC.W62.0950-01 – 1 pcs; screw 3,9x16-A2 DIN7981 – 1 pcs; pin 5x10 DIN6325D – 2 pcs* *Base profile – AYPC.W62.0701* 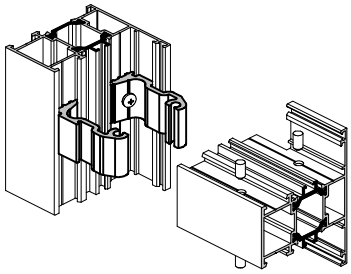 For frame / transom profiles AYPC.W62.0102E, AYPC.W62.0122E / AYPC.W62.0302E
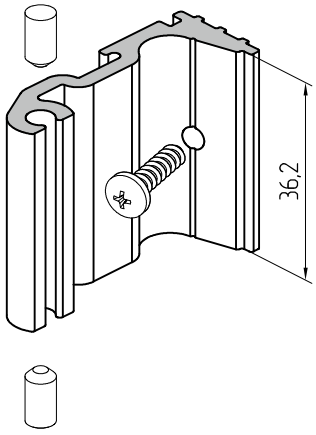	10811700	AYPC.W62.0951-02	Transom fixing element. Quantity in pack – 80 kits *Kit includes: AYPC.W62.0950-02 – 1 pcs; screw 3,9x16-A2 DIN7981 – 1 pcs; pin 5x10 DIN6325D – 2 pcs* *Base profile – AYPC.W62.0701* 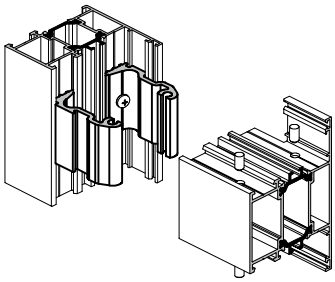 For frame / transom profiles AYPC.W62.0103E, AYPC.W62.0123E / AYPC.W62.0303E

Image	Code	Article	Application
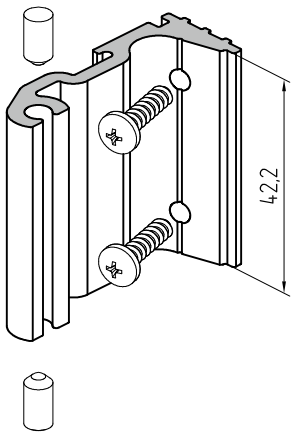	10811800	AYPC.W62.0951-03	Transom fixing element. Quantity in pack – 60 kits *Kit includes: AYPC.W62.0950-03 – 1 pcs; screw 3,9x16-A2 DIN7981 – 2pcs; pin 5x10 DIN6325D – 2 pcs* *Base profile – AYPC.W62.0701* 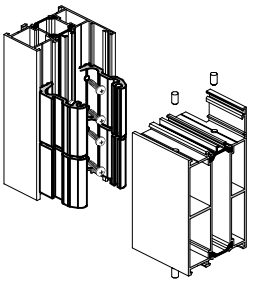 For frame profiles AYPC.W62.0106E
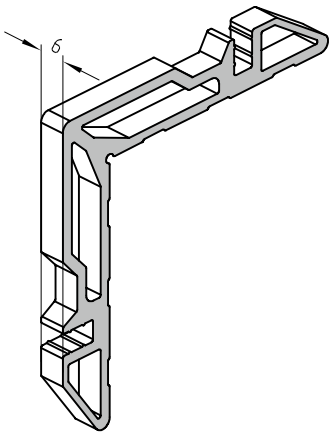	10811900	AYPC.W62.0952	Clamping corner made from *AYPC.C48.0702*. Quantity in pack – 400 pcs 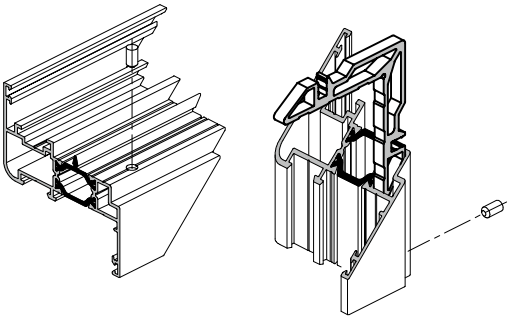 For sash / adapter profiles AYPC.W62.0201E, AYPC.W62.0211E, AYPC.W62.0221E / AYPC.W62.0819E
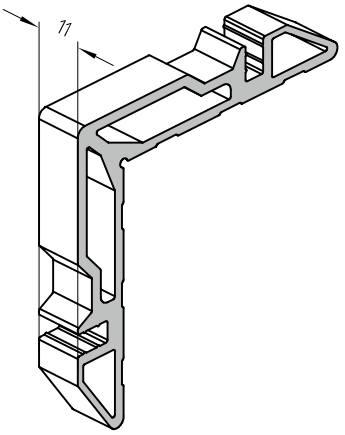	10812000	AYPC.W62.0952-01	Clamping corner made from *AYPC.C48.0702*. Quantity in pack – 200 pcs 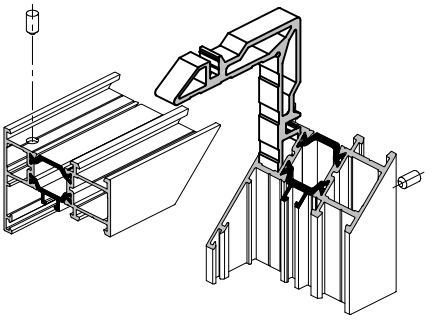 For frame / transom profiles AYPC.W62.0101E, AYPC.W62.0109E, AYPC.W62.0815E / AYPC.W62.0301E
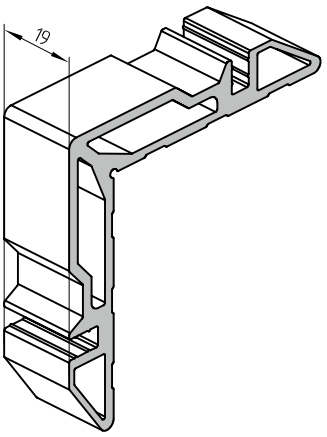	10812100	AYPC.W62.0952-02	Clamping corner made from *AYPC.C48.0702*. Quantity in pack – 100 pcs 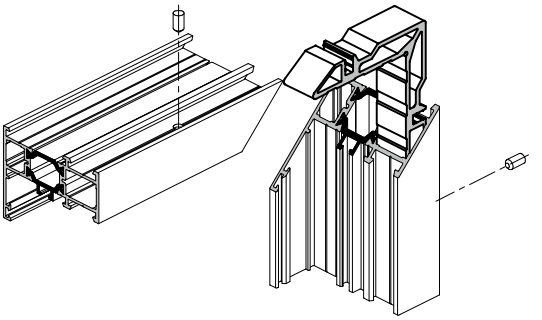 For frame / sash / transom profiles AYPC.W62.0101E / AYPC.W62.0209 / AYPC.W62.0301E

Image	Code	Article	Application
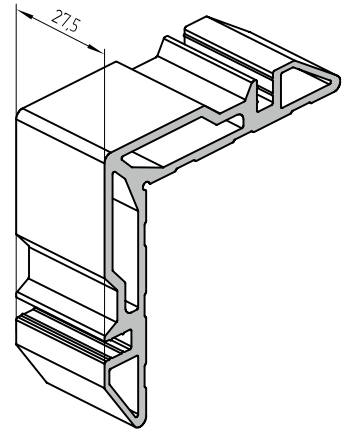	10812200	AYPC.W62.0952-03	Clamping corner made from *AYPC.C48.0702*. Quantity in pack – 100 pcs 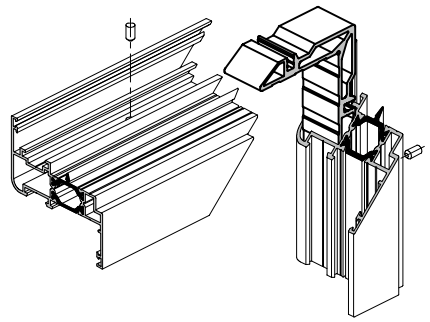 For sash profiles AYPC.W62.0201E, AYPC.W62.0211E, AYPC.W62.0221E
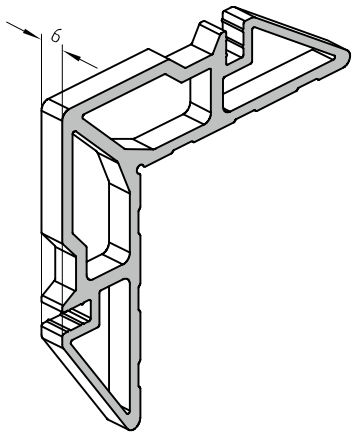	10812300	AYPC.W62.0953	Clamping corner made from *AYPC.C48.0703*. Quantity in pack – 200 pcs 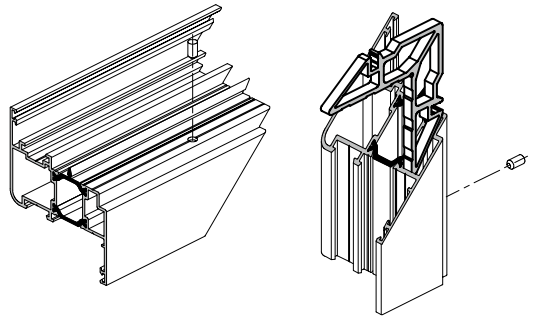 For sash profiles AYPC.W62.0202E, AYPC.W62.0212E, AYPC.W62.0222E
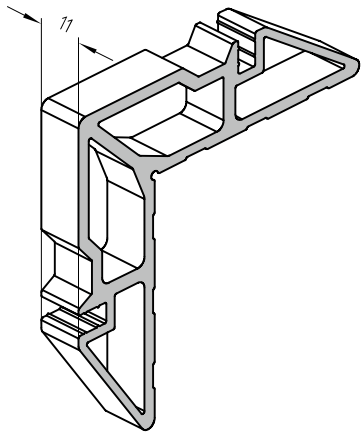	10812400	AYPC.W62.0953-01	Clamping corner made from *AYPC.C48.0703*. Quantity in pack – 200 pcs 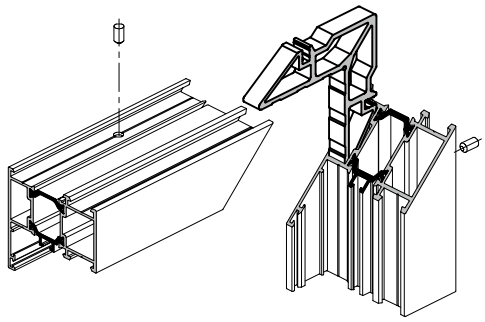 For frame / transom profiles AYPC.W62.0101E, AYPC.W62.0121E / AYPC.W62.0301E
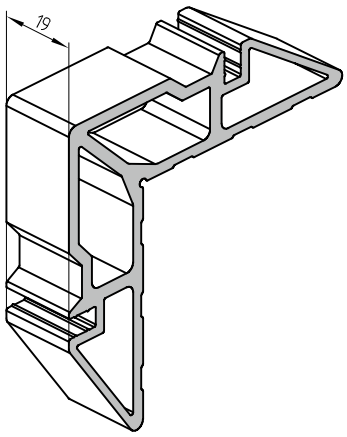	10812500	AYPC.W62.0953-02	Clamping corner made from *AYPC.C48.0703*. Quantity in pack – 100 pcs 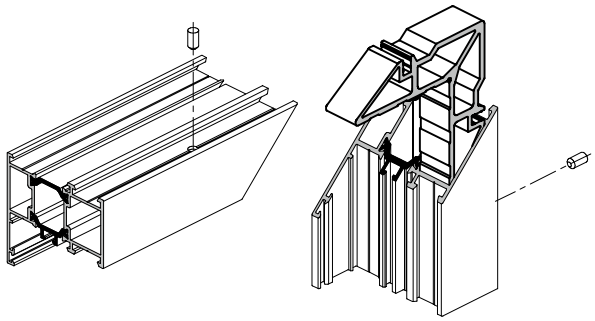 For frame / transom profiles AYPC.W62.0102E, AYPC.W62.0122E / AYPC.W62.0302E

Image	Code	Article	Application
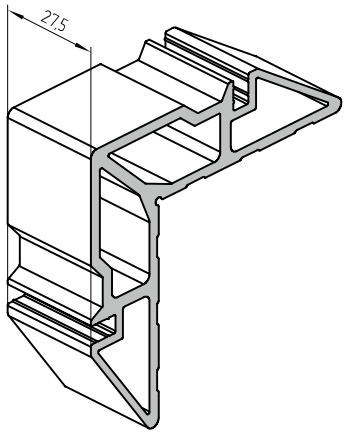	10812600	AYPC.W62.0953-03	Clamping corner made from *AYPC.C48.0703*. Quantity in pack – 40 pcs 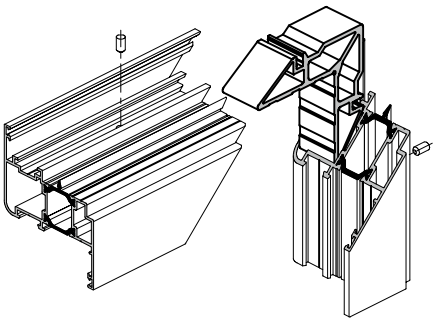 For sash profiles AYPC.W62.0202E, AYPC.W62.0212E, AYPC.W62.0222E
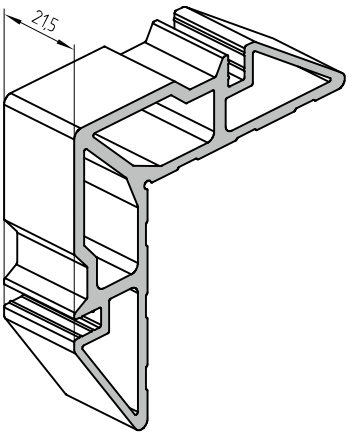	10812700	AYPC.W62.0953-04	Clamping corner made from *AYPC.C48.0703*. Quantity in pack – 60 pcs 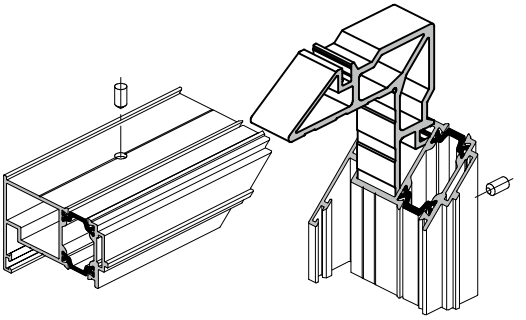 For auxiliary door profile AYPC.W62.0805E
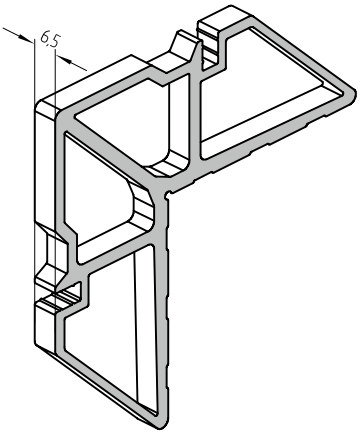	10812800	AYPC.W62.0954	Clamping corner made from *AYPC.C48.0704*. Quantity in pack – 200 pcs 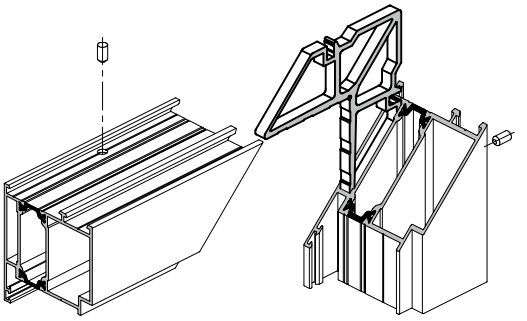 For frame / sash profiles AYPC.W62.0104E, AYPC.W62.0105E / AYPC.W62.0204E (0214E), AYPC.W62.0205E (0215E)
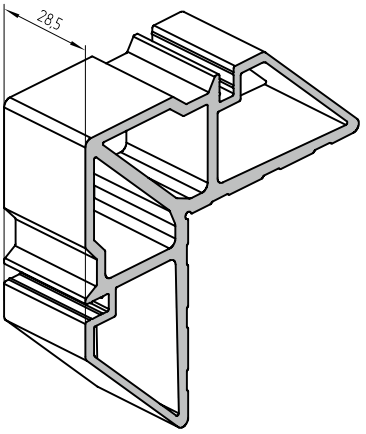	10812900	AYPC.W62.0954-01	Clamping corner made from *AYPC.C48.0704*. Quantity in pack – 50 pcs 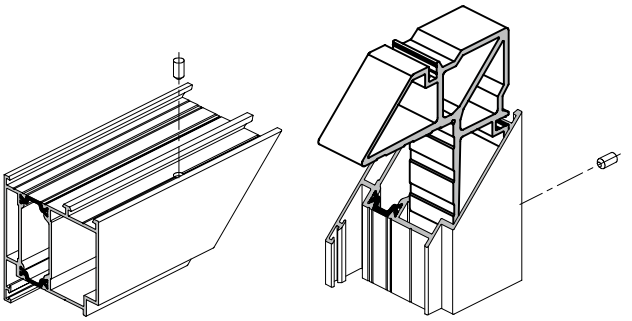 For frame / sash profiles AYPC.W62.0105E / AYPC.W62.0204E (0214E), AYPC.W62.0205E (0215E)

Image	Code	Article	Application
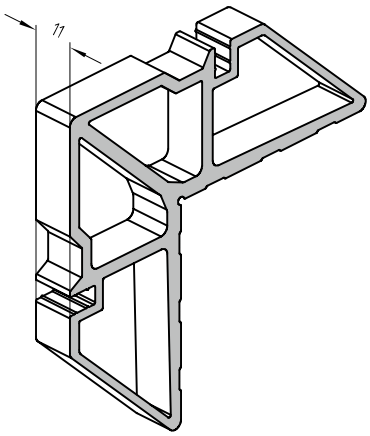	10813000	AYPC.W62.0954-02	Clamping corner made from *AYPC.C48.0704*. Quantity in pack – 140 pcs 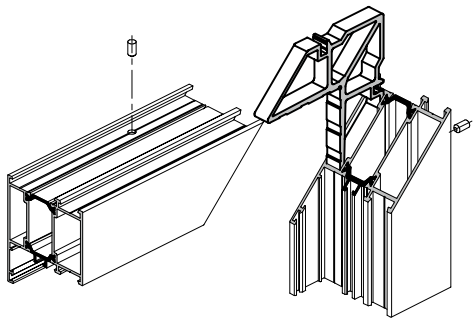 For frame / transom profiles AYPC.W62.0103E / AYPC.W62.0303E
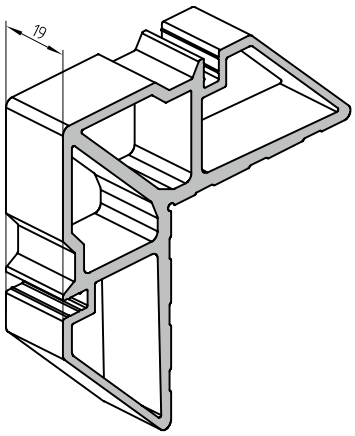	10813100	AYPC.W62.0954-03	Clamping corner made from *AYPC.C48.0704*. Quantity in pack – 70 pcs 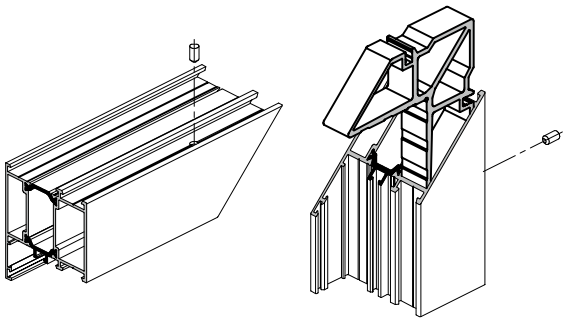 For frame / transom profiles AYPC.W62.0103E / AYPC.W62.0303E
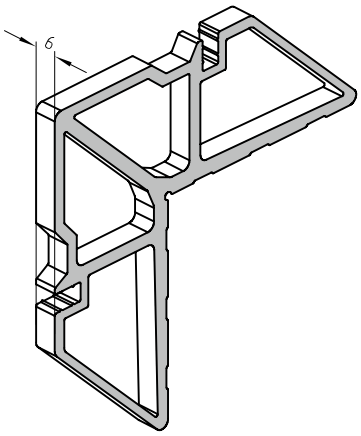	10814900	AYPC.W62.0954-04	Clamping corner made from *AYPC.C48.0704*. Quantity in pack – 200 pcs 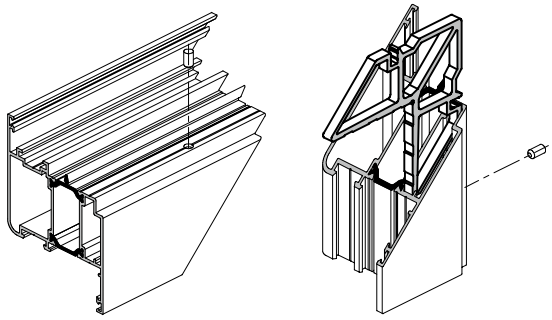 For sash profiles AYPC.W62.0203, AYPC.W62.0223E
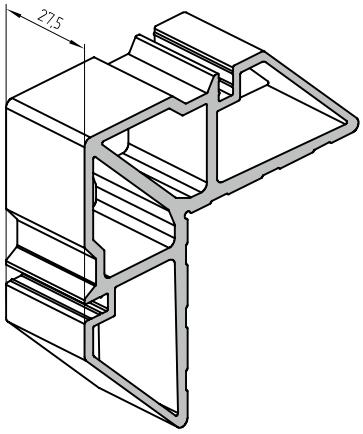	10815000	AYPC.W62.0954-05	Clamping corner made from *AYPC.C48.0704*. Quantity in pack – 50 pcs 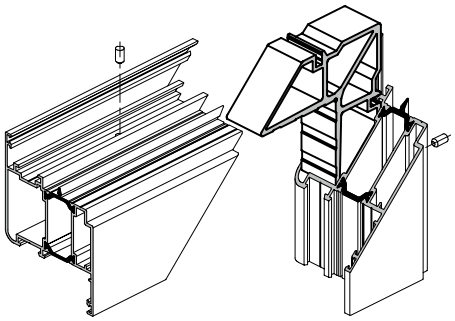 For sash profiles AYPC.W62.0203, AYPC.W62.0223E

Image	Code	Article	Application
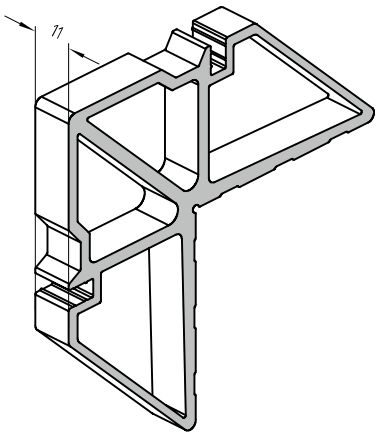	10813200	AYPC.W62.0955	Clamping corner made from *AYPC.C48.0705*. Quantity in pack – 120 pcs 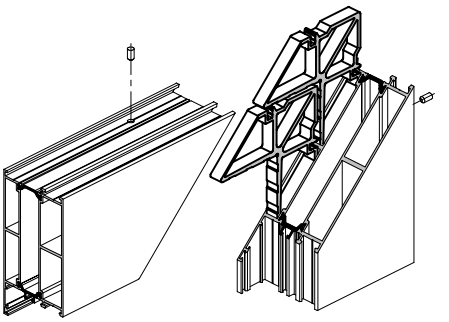 For frame profiles AYPC.W62.0106E
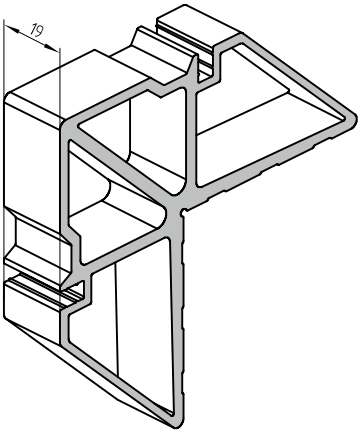	10813300	AYPC.W62.0955-01	Clamping corner made from *AYPC.C48.0705*. Quantity in pack – 70 pcs 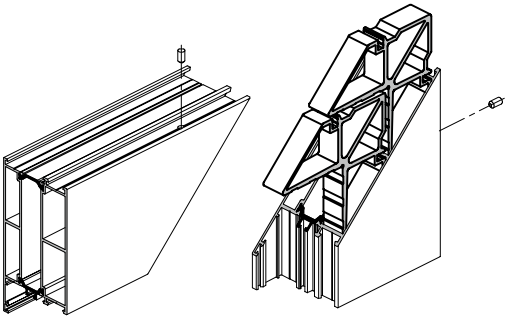 For frame profiles AYPC.W62.0106E
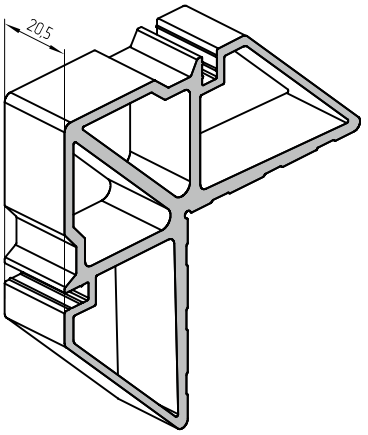	10813400	AYPC.W62.0955-02	Clamping corner made from *AYPC.C48.0705*. Quantity in pack – 60 pcs 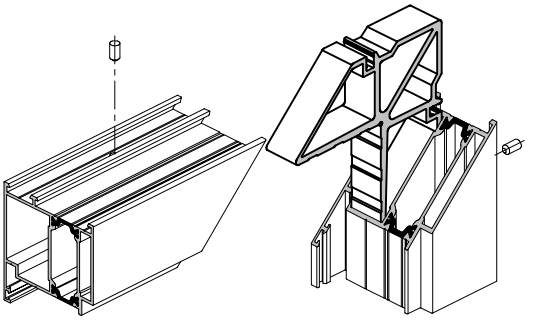 For frame / sash profiles AYPC.W62.0104E / AYPC.W62.0204E (0214E), AYPC.W62.0205E (0215E)
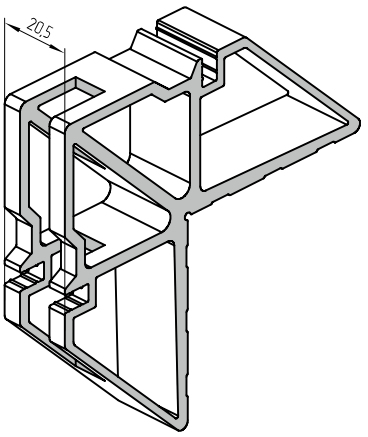	10815400	AYPC.W62.0956	Clamping corner made from *AYPC.C48.0705*. Quantity in pack – 32 pcs 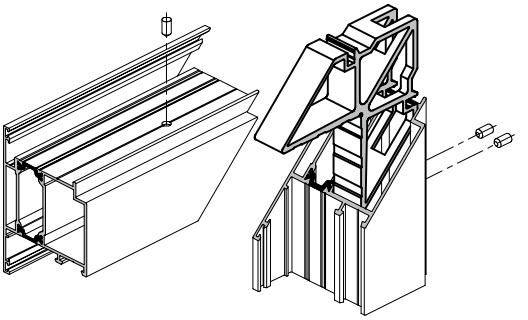 For sash profiles AYPC.W62.0204E (0214E) / AYPC.W62.0205E (0215E)

Image	Code	Article	Application
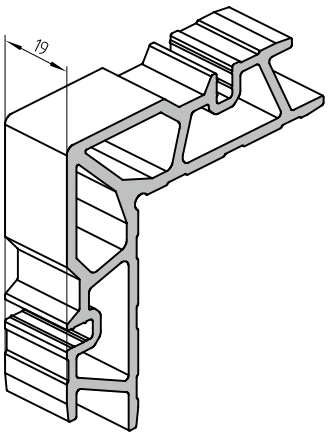	12431000	AYPC.W50.0931	Clamping corner made from *AYPC.W50.0703*. Quantity in pack – 60 pcs 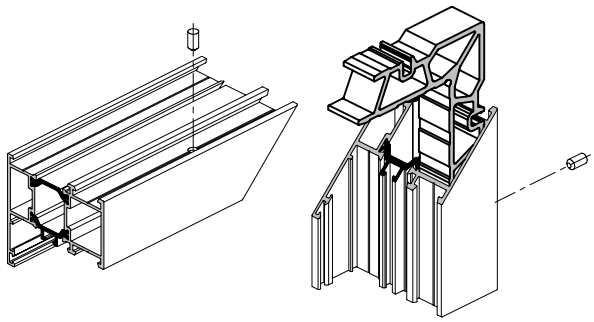 For frame / transom profiles AYPC.W62.0102E / AYPC.W62.0302E
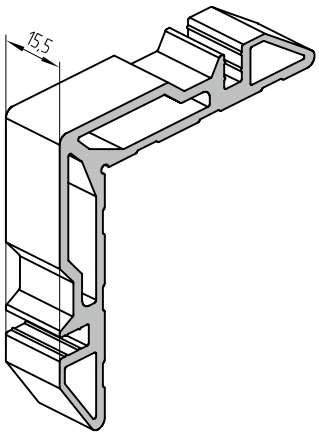	11231400	AYPC.F50.1950-05	Clamping corner made from *AYPC.C48.0702*. Quantity in pack – 32 pcs 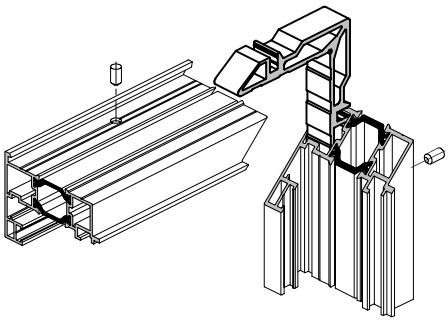 For frame profiles AYPC.W62.0815E
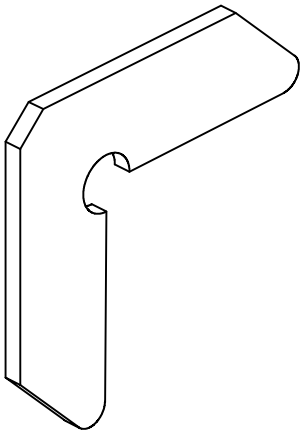	10462100	AYPC.C43.0905	Leveling corner. Quantity in pack – 200 pcs 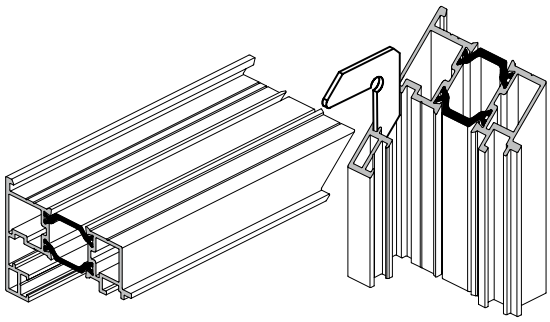 For frame profiles AYPC.W62.0815E
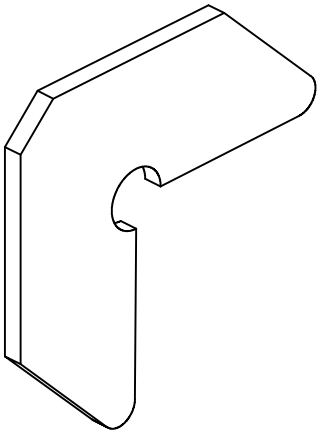	10813600	AYPC.W62.0957	Leveling corner. Quantity in pack – 200 pcs 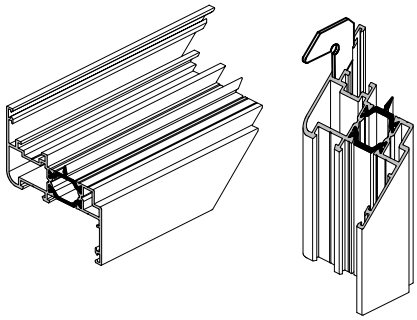 For frame / sash / transom profiles AYPC.W62.0104E, AYPC.W62.0105E / AYPC.W62.02XXE / AYPC.W62.03XXE

Image	Code	Article	Application
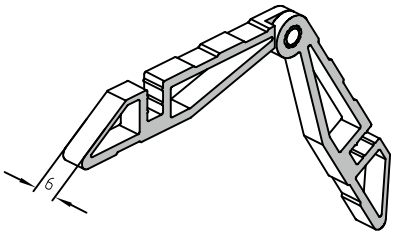	10813700	AYPC.W62.0960	Clamping corner made from *AYPC.C48.0707*. Quantity in pack – 50 pcs 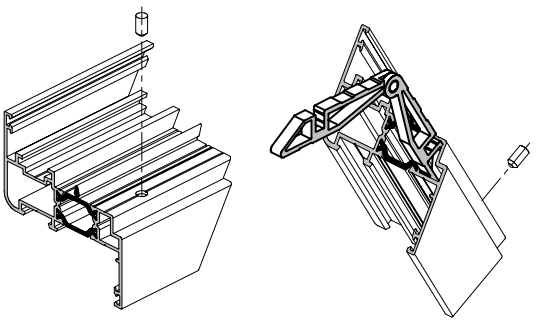 For sash profiles AYPC.W62.0201E, AYPC.W62.0211E, AYPC.W62.0221E
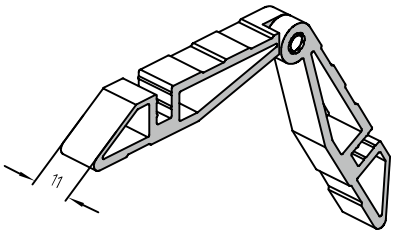	10813800	AYPC.W62.0960-01	Clamping corner made from *AYPC.C48.0707*. Quantity in pack – 50 pcs 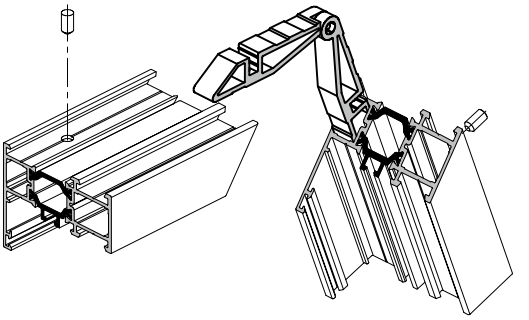 For frame / transom profiles AYPC.W62.0101E, AYPC.W62.0121E / AYPC.W62.0301E
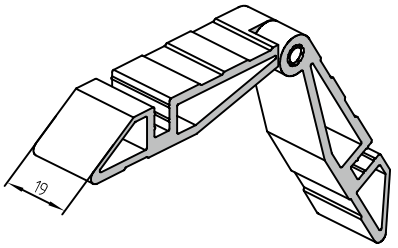	10813900	AYPC.W62.0960-02	Clamping corner made from *AYPC.C48.0707*. Quantity in pack – 100 pcs 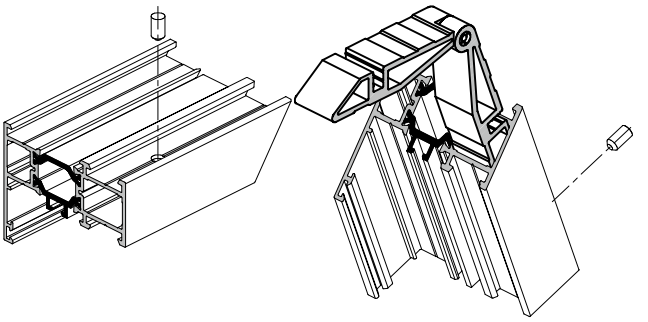 For frame / transom profiles AYPC.W62.0101E, AYPC.W62.0121E / AYPC.W62.0301E
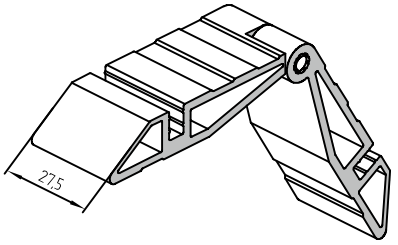	10814000	AYPC.W62.0960-03	Clamping corner made from *AYPC.C48.0707*. Quantity in pack – 20 pcs 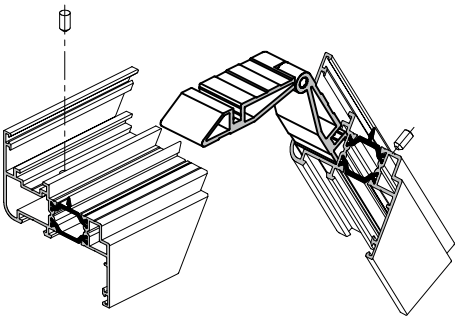 For sash profiles AYPC.W62.0201E, AYPC.W62.0211E, AYPC.W62.0221E

Image	Code	Article	Application
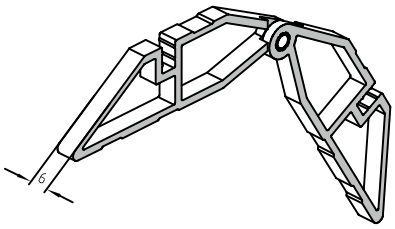	10814200	AYPC.W62.0962	Clamping corner made from *AYPC.C48.0708*. Quantity in pack – 50 pcs 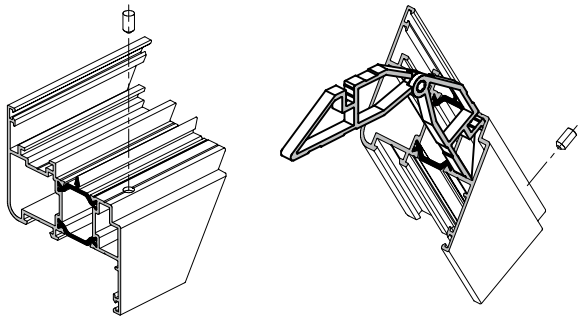 For sash profiles AYPC.W62.0202E, AYPC.W62.0212E, AYPC.W62.0222E
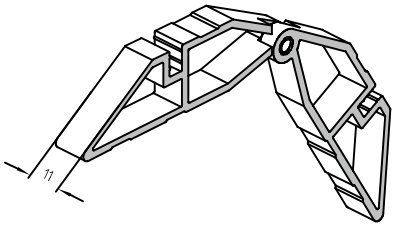	10814300	AYPC.W62.0962-01	Clamping corner made from *AYPC.C48.0708*. Quantity in pack – 28 pcs 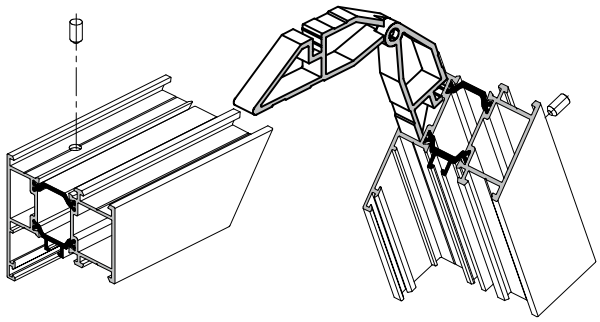 For frame / transom profiles AYPC.W62.0102E, AYPC.W62.0122E / AYPC.W62.0302E
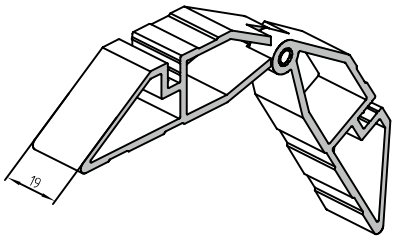	10814400	AYPC.W62.0962-02	Clamping corner made from *AYPC.C48.0708*. Quantity in pack – 40 pcs 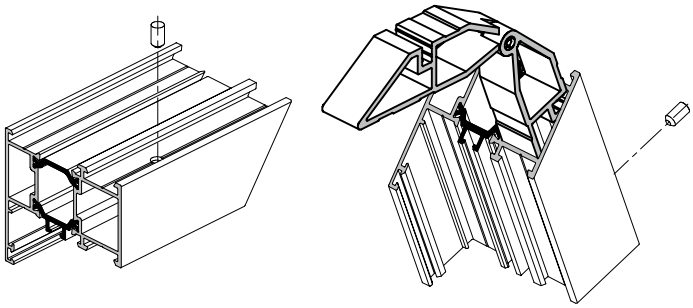 For frame / transom profiles AYPC.W62.0102E, AYPC.W62.0122E / AYPC.W62.0302E
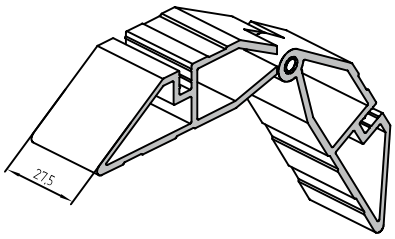	10814500	AYPC.W62.0962-03	Clamping corner made from *AYPC.C48.0708*. Quantity in pack – 40 pcs 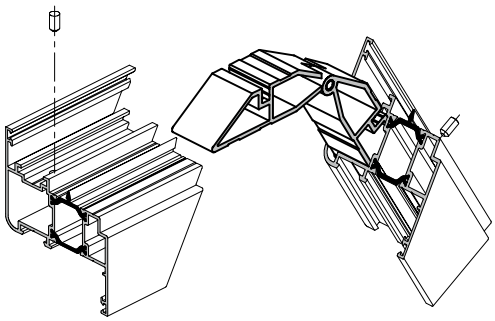 For sash profiles AYPC.W62.0202E, AYPC.W62.0212E, AYPC.W62.0222E

Image	Code	Article	Application
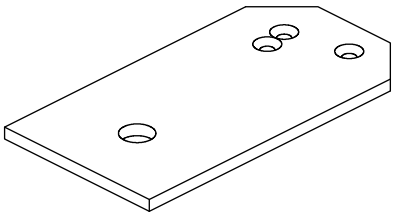	10213000	AYPC.110.0943	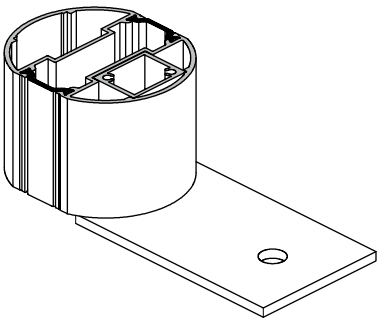 Plate. Quantity in pack – 30 pcs

Window sill

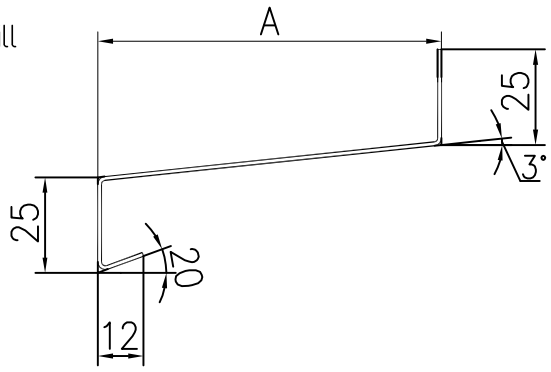

Article	Dimension A	Weight, kg/rm	Catalogue code	Profile colour	Bar length, rm	Quantity in pack	Standard order, rm	Article	Dimension A	Weight, kg/rm	Catalogue code	Profile colour	Bar length, rm	Quantity in pack	Standard order, rm
WE90	A = 90 mm	0,405	1160101 1160102 330027219 330027249 330027259 330027203 330027204 330027207 330027208 330027213 330027215 330027221 330027222 330027223 330027225 330027226	white (~RAL9016) brown (~RAL8014) golden oak cherry nut grey (~RAL7038) beige purple red (~RAL3004) silver (~RAL9006) anthracite (~RAL7016) green fir (~RAL6009) cream (~RAL1013) dark brown (~RAL8019) light ivory (~RAL1015) green moss (~RAL6005) темно-синий (~RAL5011)	6	48	48 48 48 48 48 192 192 192 192 192 192 192 192 192 192 192	WE205	A = 205 mm	0,727	1160511 1160512 330032219 330032249 330032259 330032203 330032204 330032207 330032208 330032213 330032215 330032221 330032222 330032223 330032225 330032226	white (~RAL9016) brown (~RAL8014) golden oak cherry nut grey (~RAL7038) beige purple red (~RAL3004) silver (~RAL9006) anthracite (~RAL7016) green fir (~RAL6009) cream (~RAL1013) dark brown (~RAL8019) light ivory (~RAL1015) green moss (~RAL6005) темно-синий (~RAL5011)	6	48	48 48 48 48 48 192 192 192 192 192 192 192 192 192 192 192
WE110	A = 110 mm	0,467	1160111 1160112 330027219 330027249 330027259 330027203 330027204 330027207 330027208 330027213 330027215 330027221 330027222 330027223 330027225 330027226	white (~RAL9016) brown (~RAL8014) golden oak cherry nut grey (~RAL7038) beige purple red (~RAL3004) silver (~RAL9006) anthracite (~RAL7016) green fir (~RAL6009) cream (~RAL1013) dark brown (~RAL8019) light ivory (~RAL1015) green moss (~RAL6005) темно-синий (~RAL5011)	6	48	48 48 48 48 48 192 192 192 192 192 192 192 192 192 192 192	WE225	A = 225 mm	0,782	1160601 1160602 330033219 330033249 330033259 330033203 330033204 330033207 330033208 330033213 330033215 330033221 330033222 330033223 330033225 330033226	white (~RAL9016) brown (~RAL8014) golden oak cherry nut grey (~RAL7038) beige purple red (~RAL3004) silver (~RAL9006) anthracite (~RAL7016) green fir (~RAL6009) cream (~RAL1013) dark brown (~RAL8019) light ivory (~RAL1015) green moss (~RAL6005) темно-синий (~RAL5011)	6	48	48 48 48 48 48 192 192 192 192 192 192 192 192 192 192 192
WE130	A = 130 mm	0,52	1160201 1160202 330028219 330028249 330028259 330028203 330028204 330028207 330028208 330028213 330028215 330028221 330028222 330028223 330028225 330028226	white (~RAL9016) brown (~RAL8014) golden oak cherry nut grey (~RAL7038) beige purple red (~RAL3004) silver (~RAL9006) anthracite (~RAL7016) green fir (~RAL6009) cream (~RAL1013) dark brown (~RAL8019) light ivory (~RAL1015) green moss (~RAL6005) темно-синий (~RAL5011)	6	48	48 48 48 48 48 192 192 192 192 192 192 192 192 192 192 192	WE250	A = 250 mm	0,838	1160611 1160612 330034219 330034249 330034259 330034203 330034204 330034207 330034208 330034213 330034215 330034221 330034222 330034223 330034225 330034226	white (~RAL9016) brown (~RAL8014) golden oak cherry nut grey (~RAL7038) beige purple red (~RAL3004) silver (~RAL9006) anthracite (~RAL7016) green fir (~RAL6009) cream (~RAL1013) dark brown (~RAL8019) light ivory (~RAL1015) green moss (~RAL6005) темно-синий (~RAL5011)	6	48	48 48 48 48 48 192 192 192 192 192 192 192 192 192 192 192
WE150	A = 150 mm	0,578	1160301 1160302 330029219 330029249 330029259 330029203 330029204 330029207 330029208 330029213 330029215 330029221 330029222 330029223 330029225 330029226	white (~RAL9016) brown (~RAL8014) golden oak cherry nut grey (~RAL7038) beige purple red (~RAL3004) silver (~RAL9006) anthracite (~RAL7016) green fir (~RAL6009) cream (~RAL1013) dark brown (~RAL8019) light ivory (~RAL1015) green moss (~RAL6005) темно-синий (~RAL5011)	6	48	48 48 48 48 48 192 192 192 192 192 192 192 192 192 192 192	WE280	A = 280 mm	0,94	1160701 1160702 330035219 330035249 330035259 330035203 330035204 330035207 330035208 330035213 330035215 330035221 330035222 330035223 330035225 330035226	white (~RAL9016) brown (~RAL8014) golden oak cherry nut grey (~RAL7038) beige purple red (~RAL3004) silver (~RAL9006) anthracite (~RAL7016) green fir (~RAL6009) cream (~RAL1013) dark brown (~RAL8019) light ivory (~RAL1015) green moss (~RAL6005) темно-синий (~RAL5011)	6	48	48 48 48 48 48 192 192 192 192 192 192 192 192 192 192 192
WE165	A = 165 mm	0,615	1160401 1160402 330030219 330030249 330030259 330030203 330030204 330030207 330030208 330030213 330030215 330030221 330030222 330030223 330030225 330030226	white (~RAL9016) brown (~RAL8014) golden oak cherry nut grey (~RAL7038) beige purple red (~RAL3004) silver (~RAL9006) anthracite (~RAL7016) green fir (~RAL6009) cream (~RAL1013) dark brown (~RAL8019) light ivory (~RAL1015) green moss (~RAL6005) темно-синий (~RAL5011)	6	48	48 48 48 48 48 192 192 192 192 192 192 192 192 192 192 192	WE320	A = 320 mm	1,048	1160801 1160802 330036219 330036249 330036259 330036203 330036204 330036207 330036208 330036213 330036215 330036221 330036222 330036223 330036225 330036226	white (~RAL9016) brown (~RAL8014) golden oak cherry nut grey (~RAL7038) beige purple red (~RAL3004) silver (~RAL9006) anthracite (~RAL7016) green fir (~RAL6009) cream (~RAL1013) dark brown (~RAL8019) light ivory (~RAL1015) green moss (~RAL6005) темно-синий (~RAL5011)	6	48	48 48 48 48 48 192 192 192 192 192 192 192 192 192 192 192
WE180	A = 180 mm	0,66	1160501 1160502 330031219 330031249 330031259 330031203 330031204 330031207 330031208 330031213 330031215 330031221 330031222 330031223 330031225 330031226	white (~RAL9016) brown (~RAL8014) golden oak cherry nut grey (~RAL7038) beige purple red (~RAL3004) silver (~RAL9006) anthracite (~RAL7016) green fir (~RAL6009) cream (~RAL1013) dark brown (~RAL8019) light ivory (~RAL1015) green moss (~RAL6005) темно-синий (~RAL5011)	6	48	48 48 48 48 48 192 192 192 192 192 192 192 192 192 192 192	WE360	A = 360 mm	1,154	1160901 1160901 330037219 330037249 330037259 330037203 330037204 330037207 330037208 330037213 330037215 330037221 330037222 330037223 330037225 330037226	white (~RAL9016) brown (~RAL8014) golden oak cherry nut grey (~RAL7038) beige purple red (~RAL3004) silver (~RAL9006) anthracite (~RAL7016) green fir (~RAL6009) cream (~RAL1013) dark brown (~RAL8019) light ivory (~RAL1015) green moss (~RAL6005) темно-синий (~RAL5011)	6	48	48 48 48 48 48 192 192 192 192 192 192 192 192 192 192 192

Side plug

Art.	Product name	Weight, kg/pcs	Catalogue code	Profile	Standard order, pcs	Description	Art.	Product name	Weight, kg/pcs	Catalogue code	Profile	Standard order, pcs	Description
P150R	Side plug (right)	0,025	1161121 1161122	white brown	80	ABS plastic, for sills WE90-WE150	P225L	Side plug (left)	0,038	1161231 1161232	white brown	60	ABS plastic, for sills WE165-WE225
P150L	Side plug (left)	0,025	1161131 1161132	white brown	80	ABS plastic, for sills WE90-WE150	P360R	Side plug (right)	0,057	1161321 1161322	white brown	60	ABS plastic, for sills WE250-WE360
P225R	Side plug (right)	0,038	1161221 1161222	white brown	60	ABS plastic, for sills WE165-WE225	P360L	Side plug (left)	0,057	1161331 1161332	white brown	60	ABS plastic, for sills WE250-WE360

Support bracket

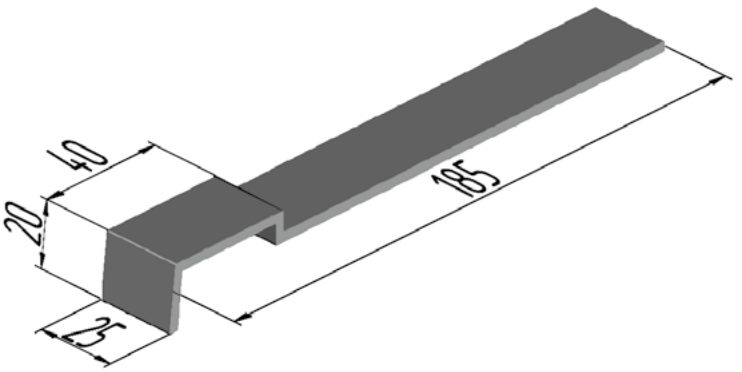

Art.	Product name	Catalogue code	Standard order, pcs	Description
BS	Support bracket	1161400	40	Aluminium

ALUTECH ALT W62
WINDOW
AND DOOR SYSTEM

SCHEME OF GLASS BEARING SUPPORTS INSTALLATION

04

Scheme of glass bearing supports installation

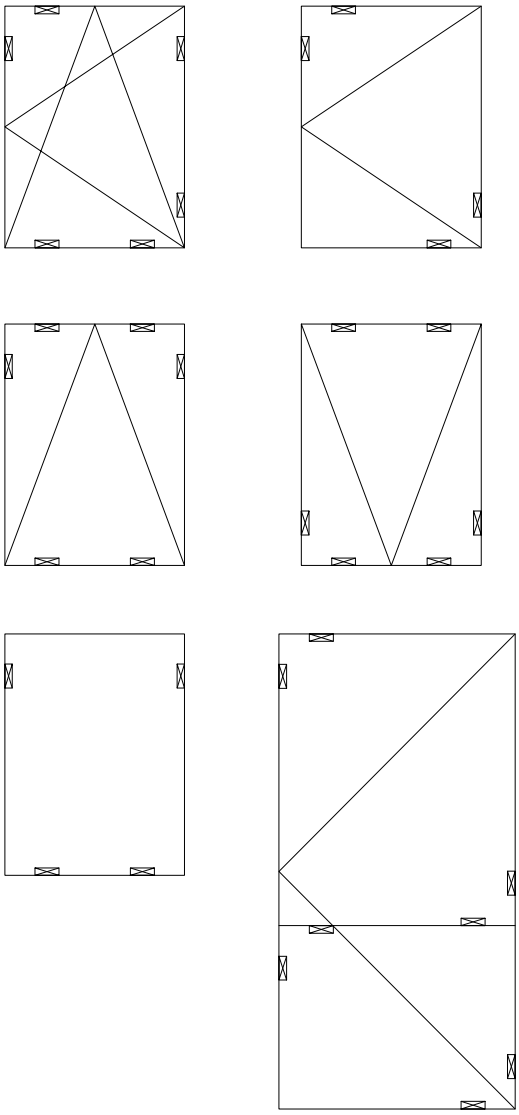

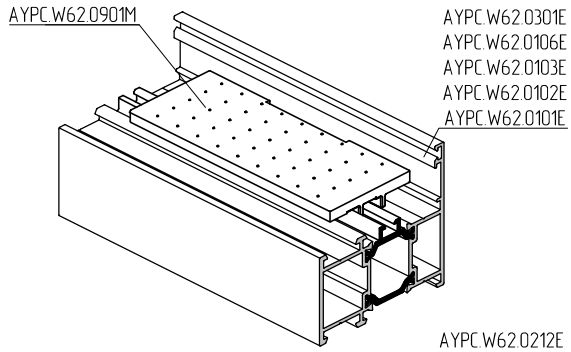

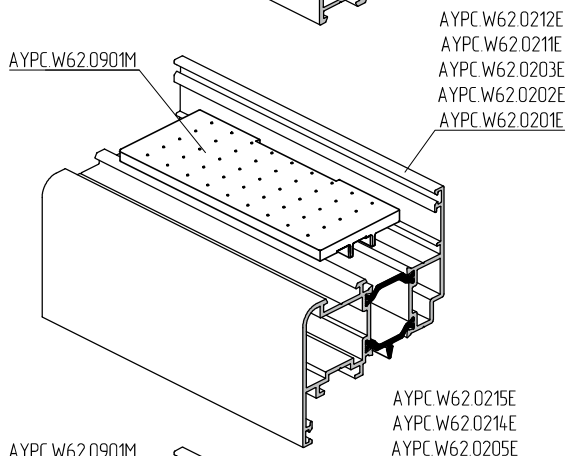

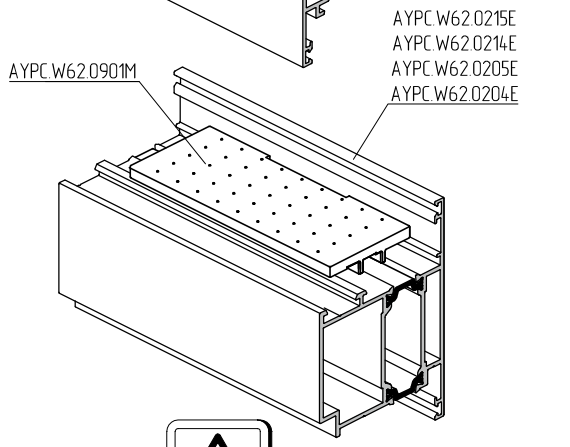

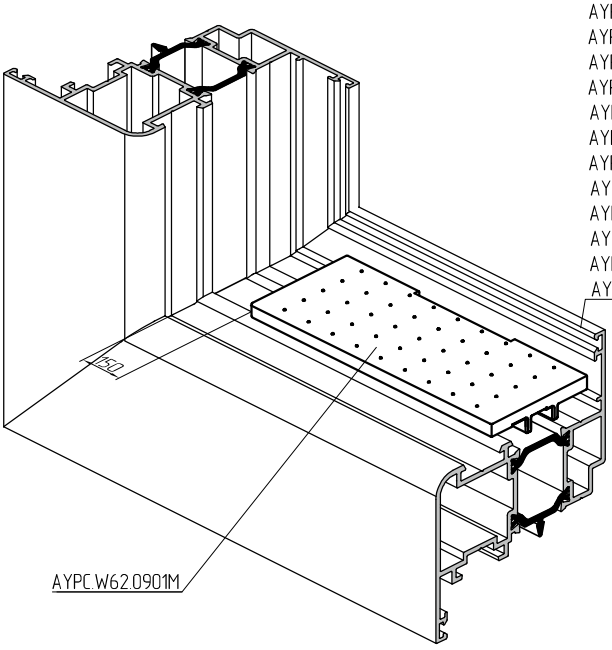

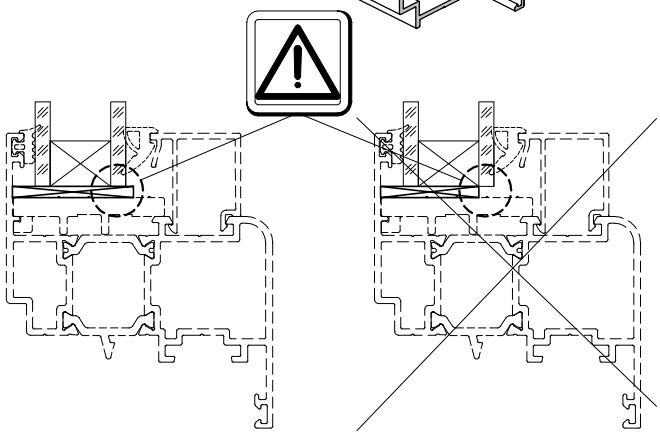

AYPC.W62.0901M bearing support

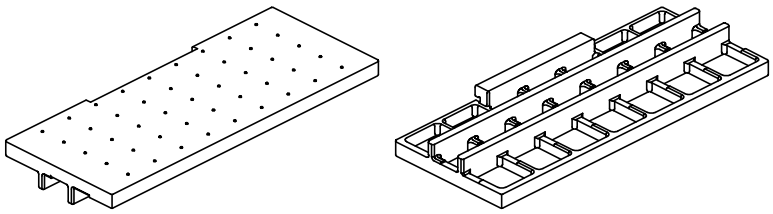

Scheme of glass bearing supports installation

The AYPC.W62.0917 support can be used only in AYPC.W62.0321E transom profiles and AYPC.W62.0221E, AYPC.W62.0222E, AYPC.W62.0223E sash profiles.

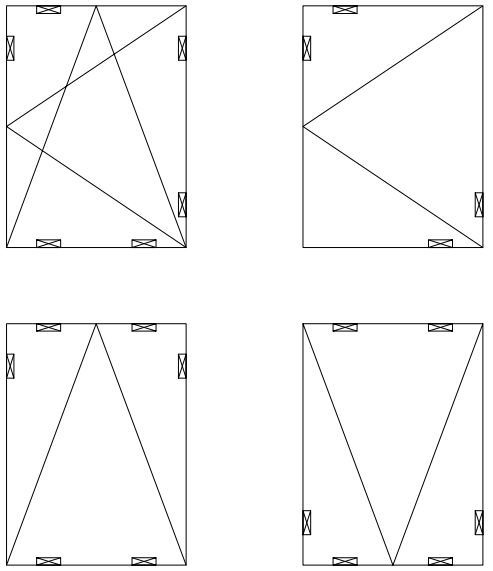

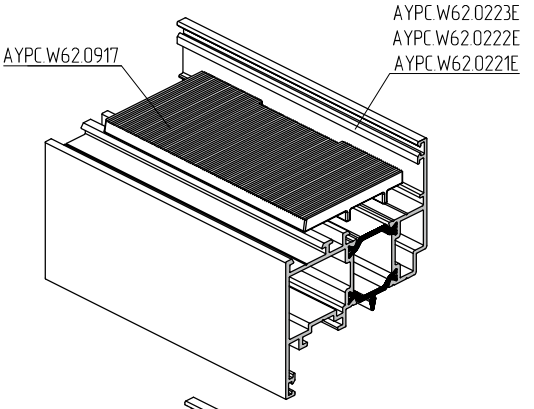

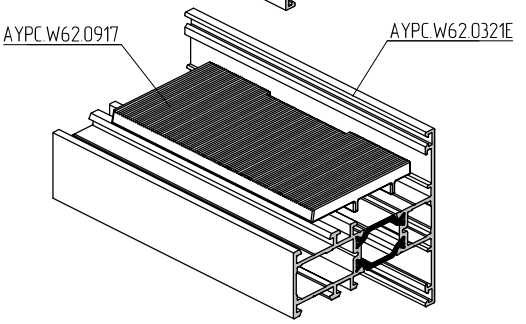

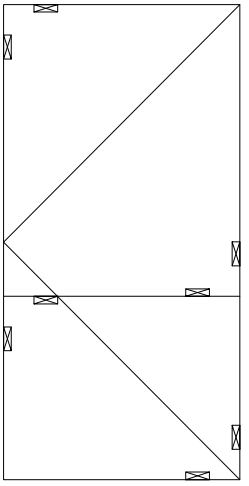

AYPC.W62.0917 bearing support

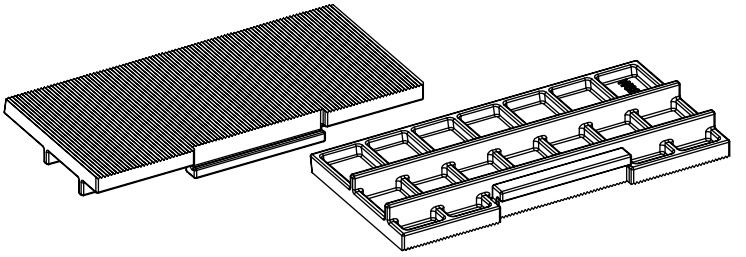

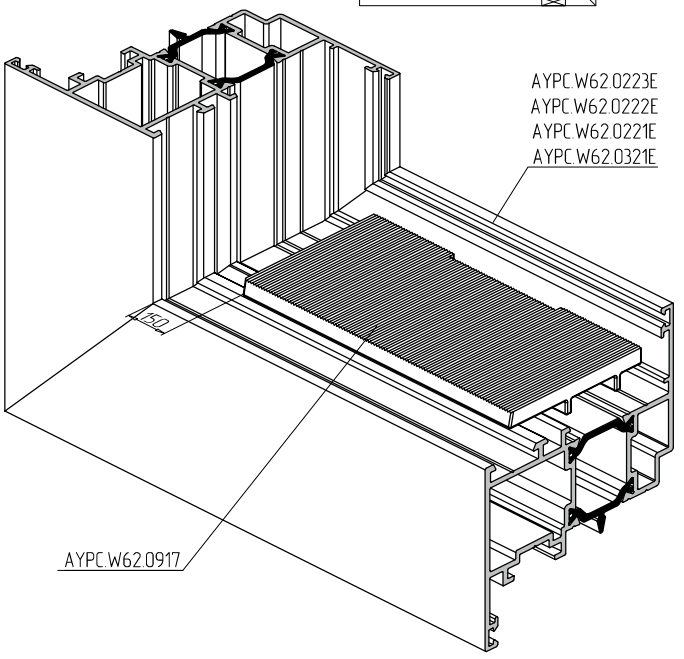

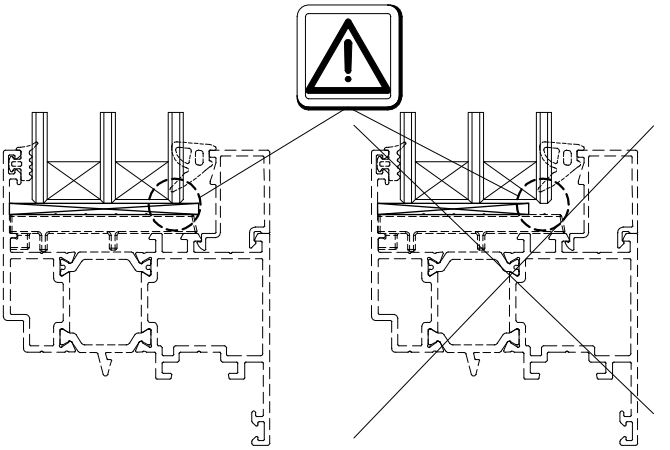

ALUTECH ALT W62
WINDOW
AND DOOR SYSTEM

GASKETS CUTTING AND INSTALLATION

05

Gaskets cutting and installation

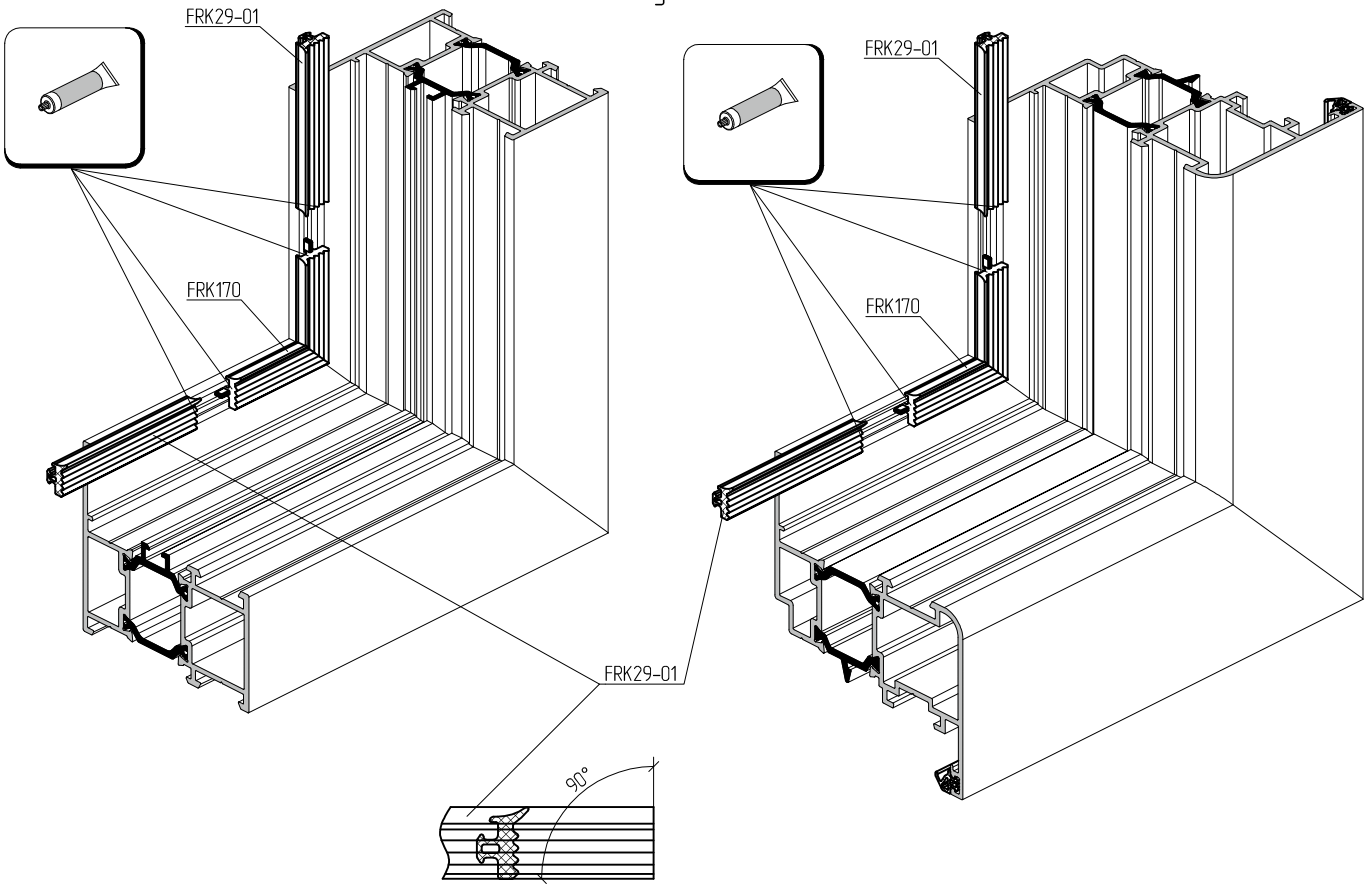

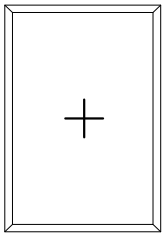

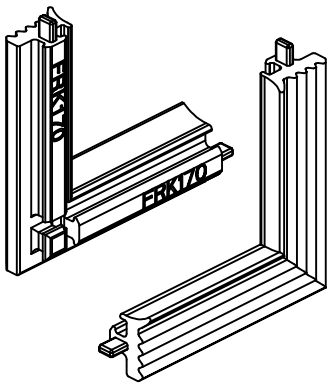

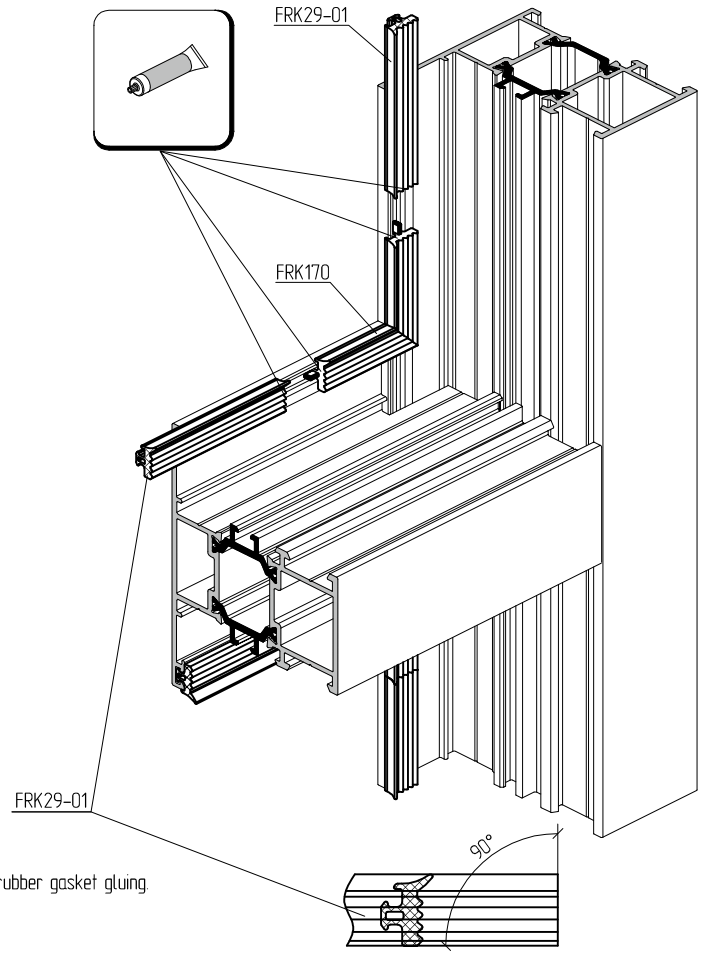

Cut the gasket with 1% of extra length.
Gaskets junctions should be glued with the adhesive, designed for rubber gasket gluing.

Gaskets cutting and installation

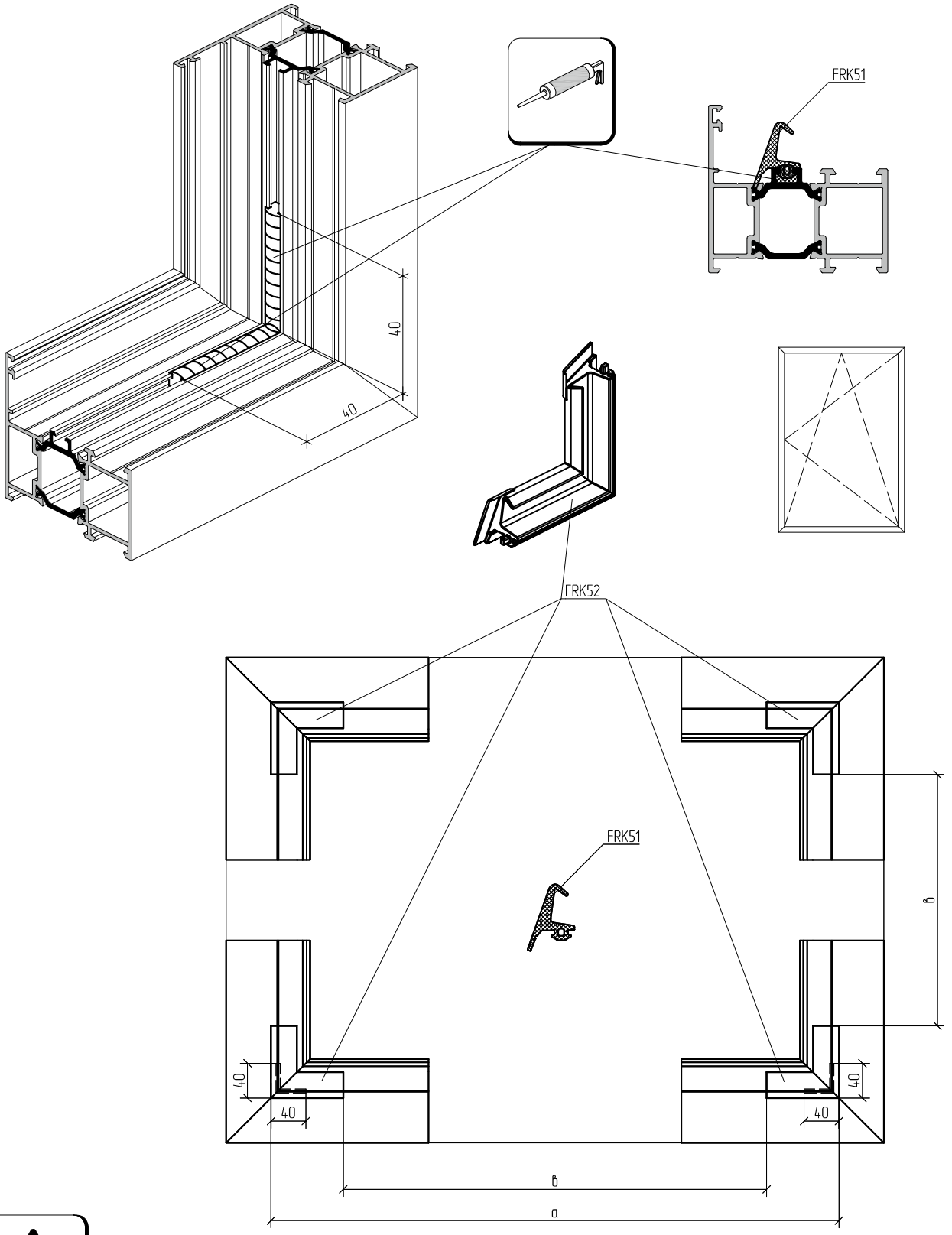

Seal. Sealant info is provided on request.
Cut the gasket with 1% of extra length.

Gaskets cutting and installation

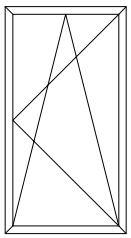

A. Sealing zone. Sealant info is provided on request.

Seal. Sealant info is provided on request.

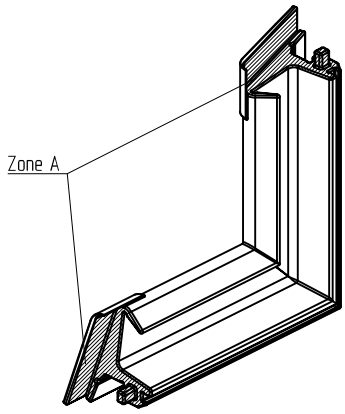

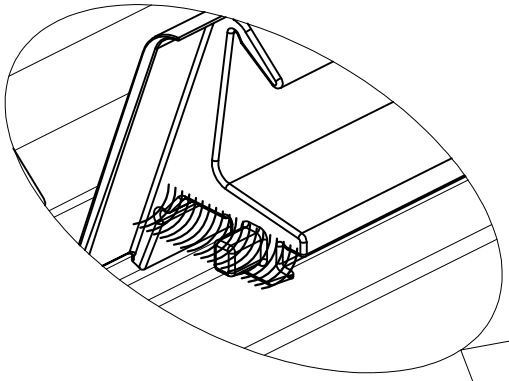

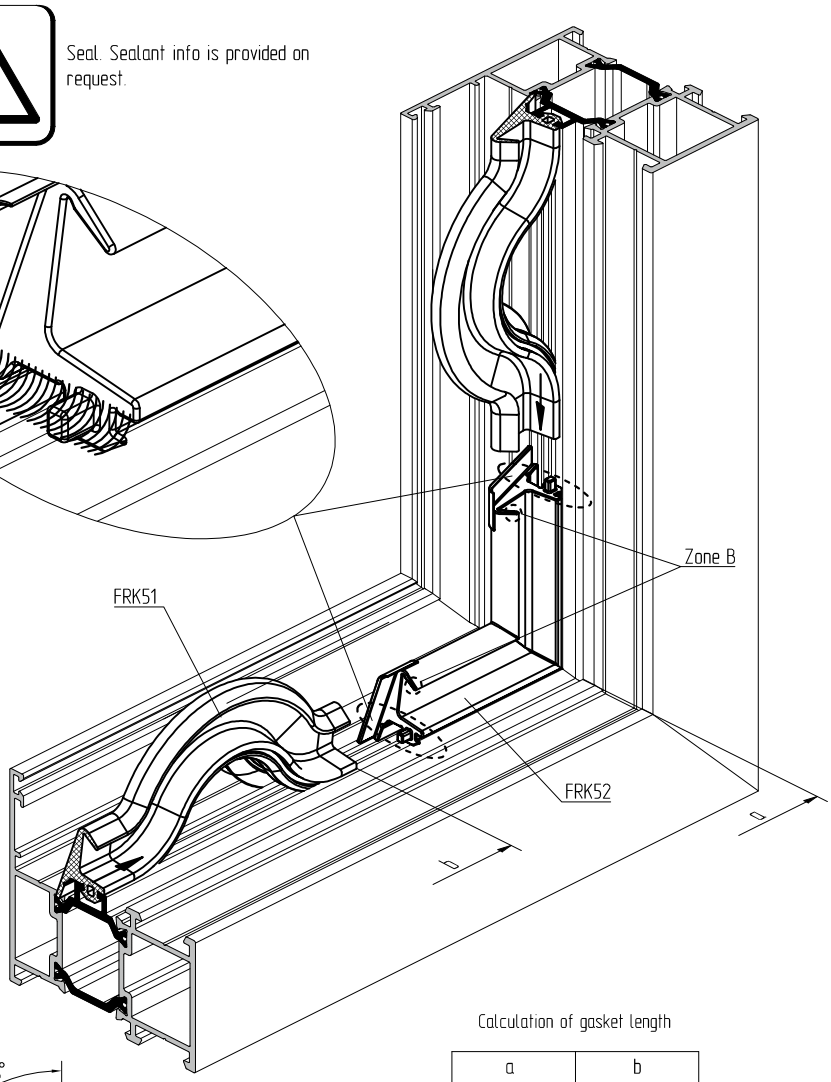

B. Zone for glue for rubber gaskets gluing.

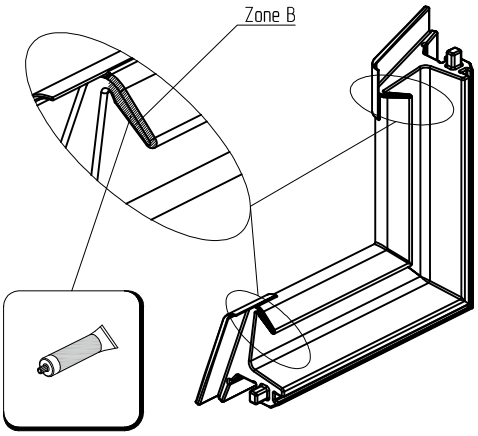

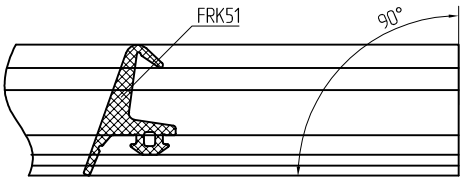

Calculation of gasket length

a	b
≤1000 mm	(a-100)+1%
>1000 mm	(a-100)+0,5%

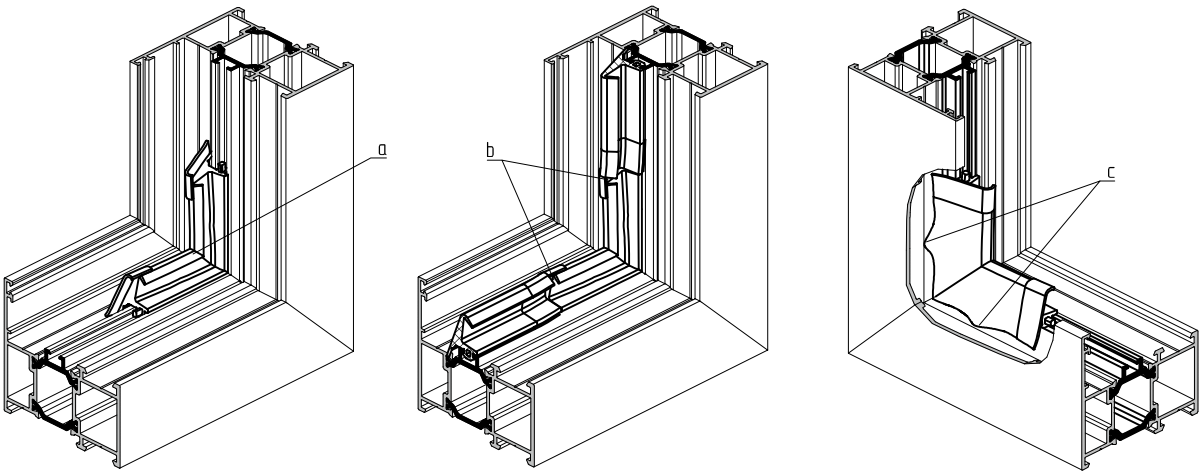

When installing FRK52 rubber corner, avoid pressing through (a), knob of connection between corner and FRK51 gasket (b), deformation (c).

Gaskets cutting and installation

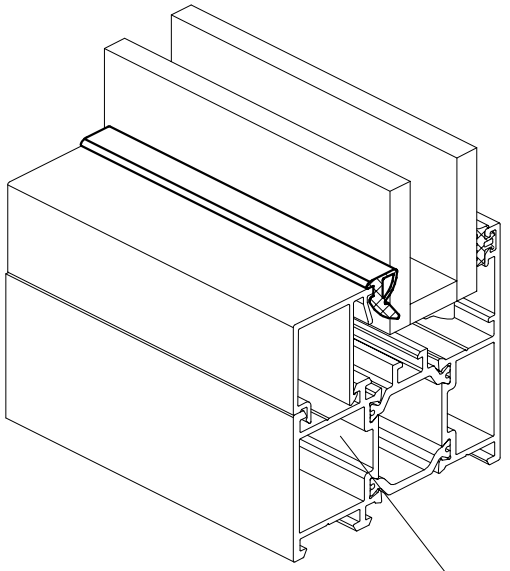

AYPC.W62.0101E
AYPC.W62.0102E
AYPC.W62.0103E
AYPC.W62.0104E
AYPC.W62.0105E
AYPC.W62.0106E ...
AYPC.W62.0301E
AYPC.W62.0302E
AYPC.W62.0303E ...

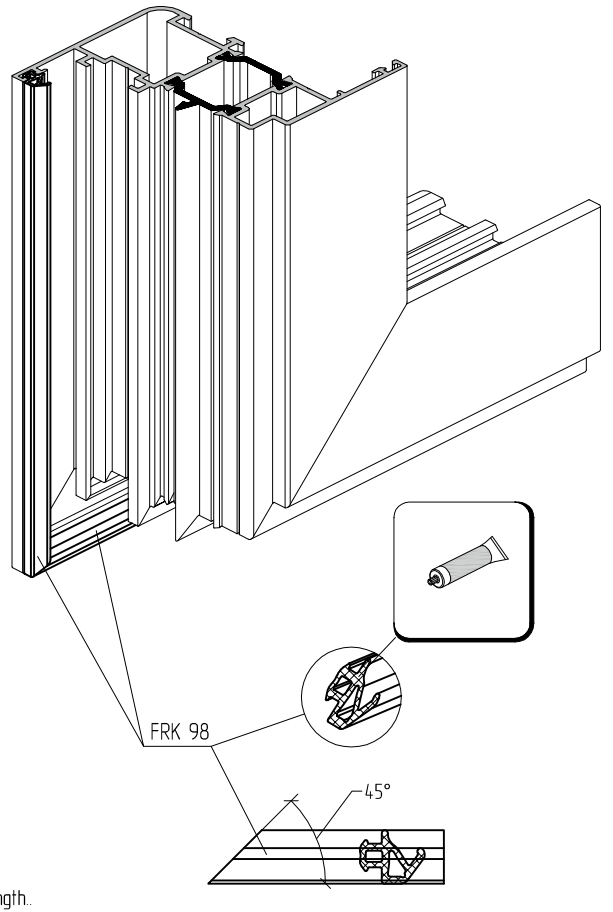

AYPC.W62.0201E
AYPC.W62.0202E
AYPC.W62.0203E
AYPC.W62.0204E
AYPC.W62.0205E
AYPC.W62.0211E
AYPC.W62.0212E
AYPC.W62.0221E
AYPC.W62.0222E
AYPC.W62.0223E

Cut the gasket with 1% of extra length..
Gaskets junctions should be glued with the adhesive, designed for rubber gasket gluing.

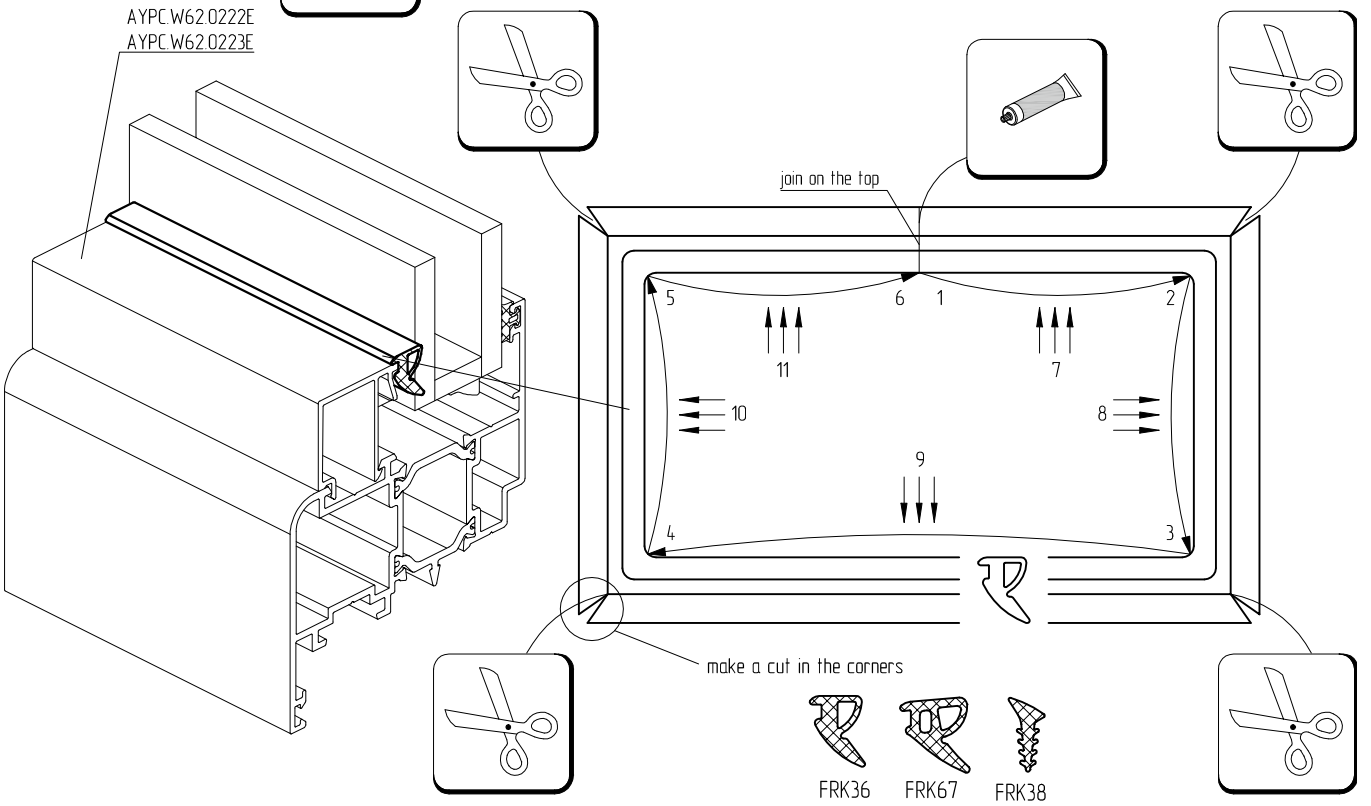

Gaskets cutting and installation

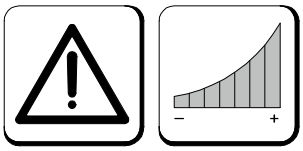

The FRK101 gasket is used in windows with improved performances.
Installation after assemblage and mounting is possible.

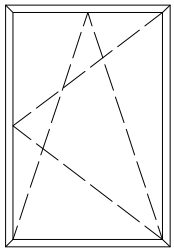

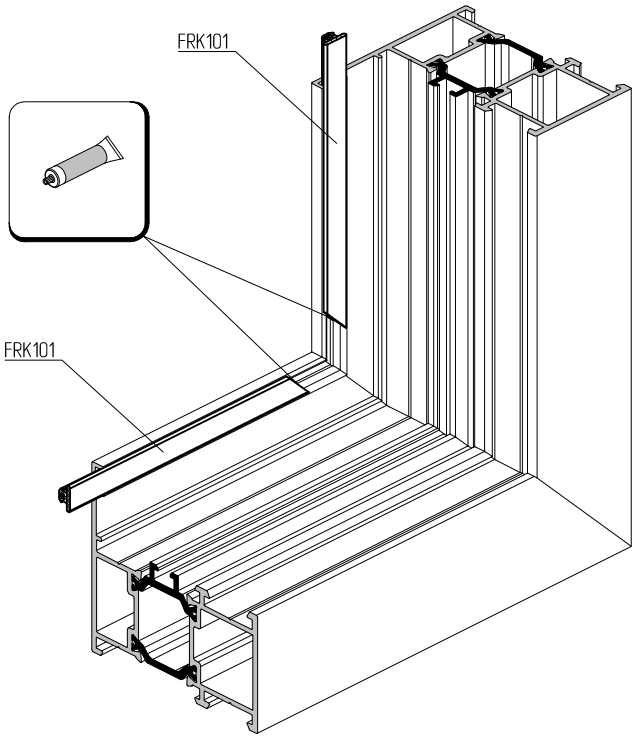

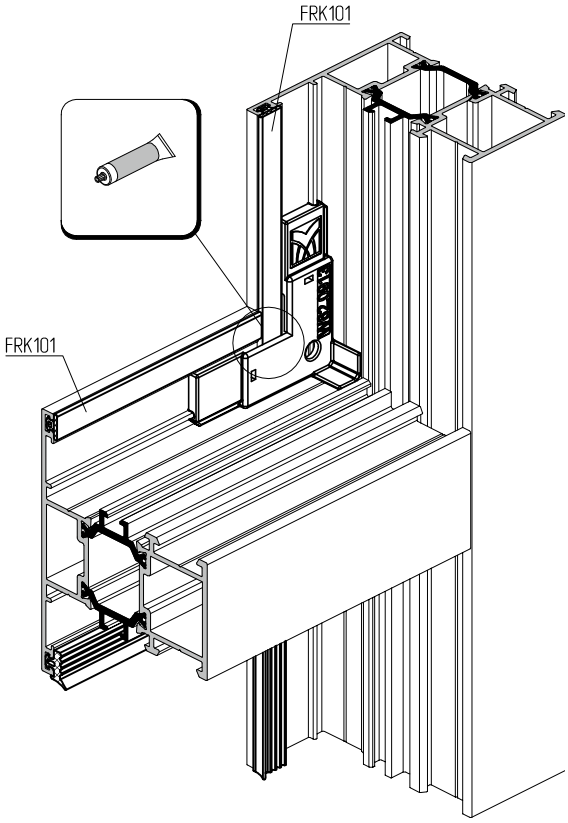

Cutting of FRK101 rubber gasket

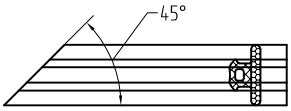

Installation of FRK101 rubber gasket

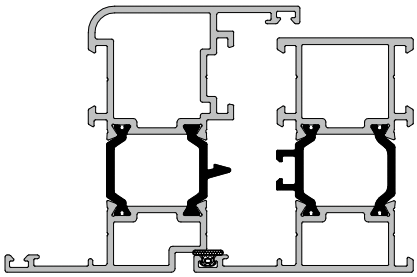

Cutting of FRK101 rubber gasket

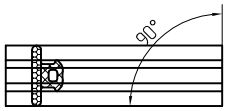

Cut the gasket with 1% of extra length.
Gaskets junctions should be glued with the adhesive, designed for rubber gasket gluing.

ALUTECH ALT W62
WINDOW
AND DOOR SYSTEM

TABLE OF GLAZING

06

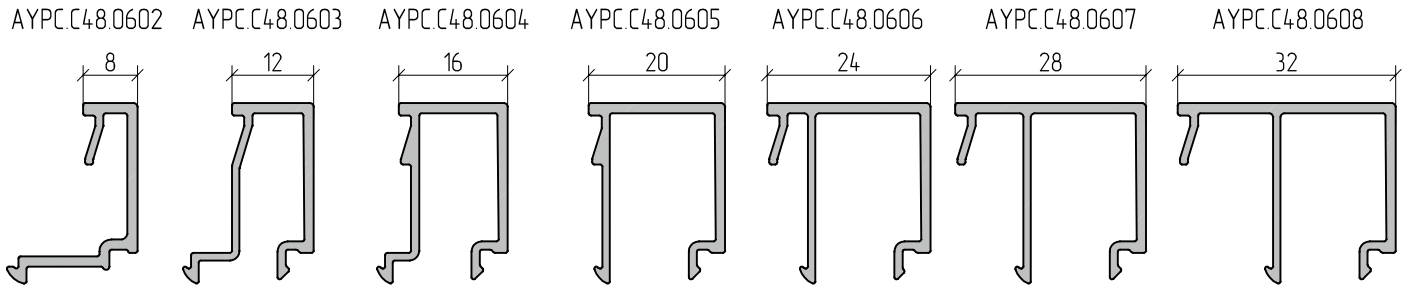

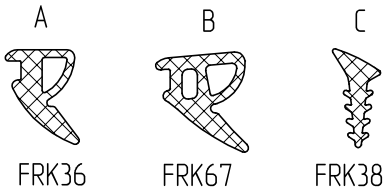

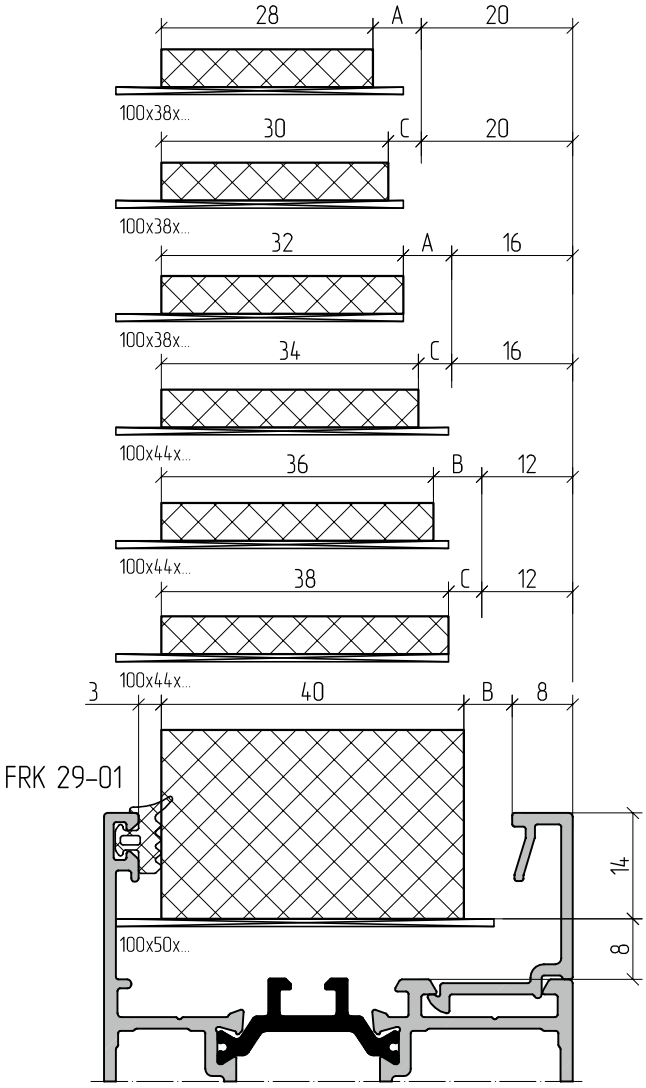

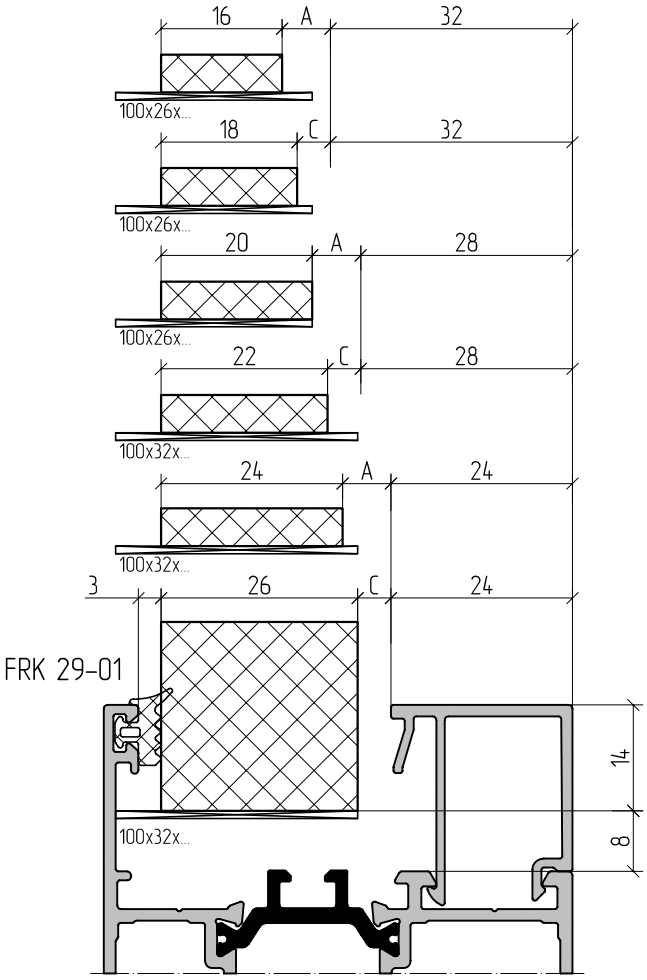

Note:

1 – The base for infill unit installation is the same in all frame and sash profiles.

2 – Data given in the table is for reference, the values are suitable for preliminary calculation . In case of practical use, it's necessary to check their validity on the basis of actual parameters, such as accuracy of infill unit manufacturing (tolerances); accuracy of gaskets manufacturing (tolerances); conditions of gasket installation and system assemblage; tolerances for glass bead profile and tolerances for combined profiles assemblage.

For correct system operation the gaskets must be force fitted .

3 – FRK14-FRK19 gaskets, AYPC.F50.0701 and AYPC.F50.0702 profiles data are provided in ALT F50 catalogue.

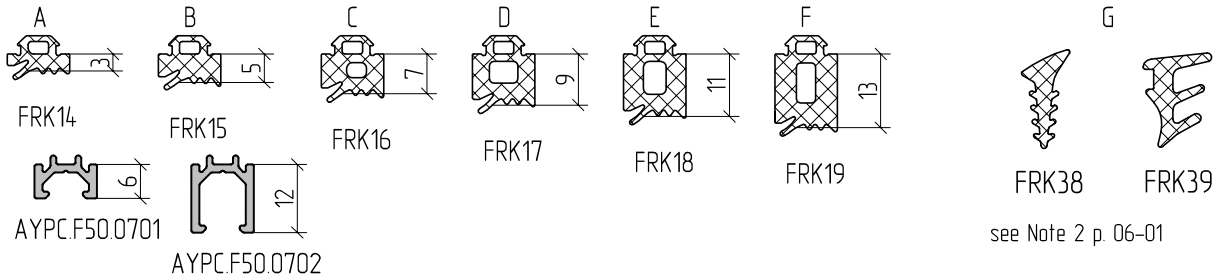

see Note 2 p. 06-01

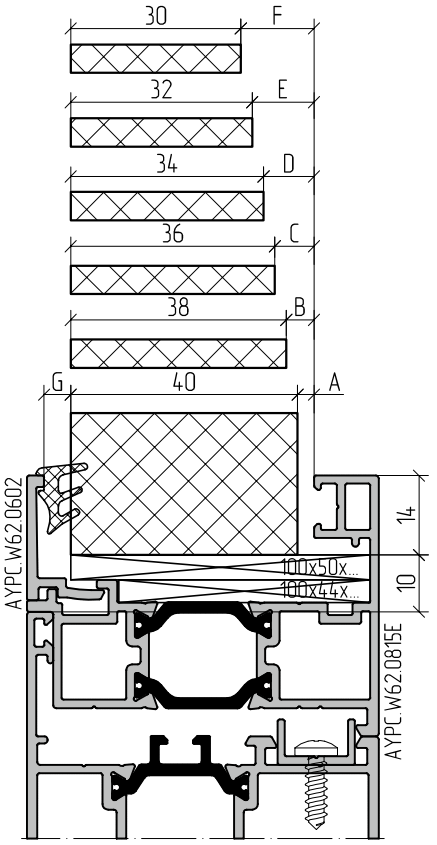

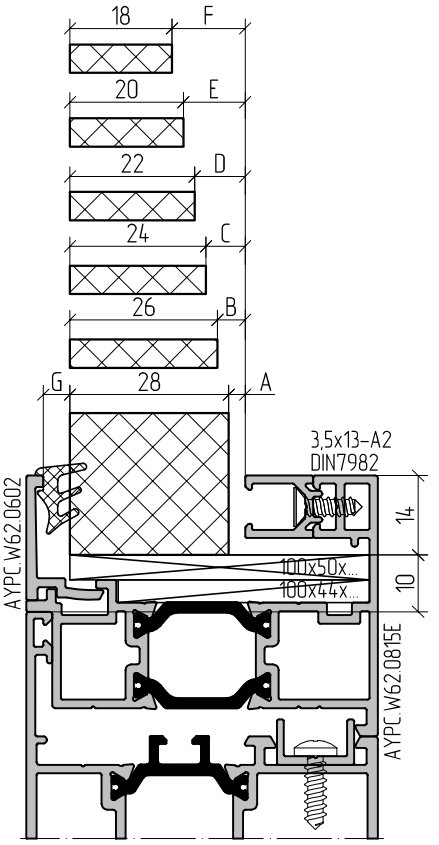

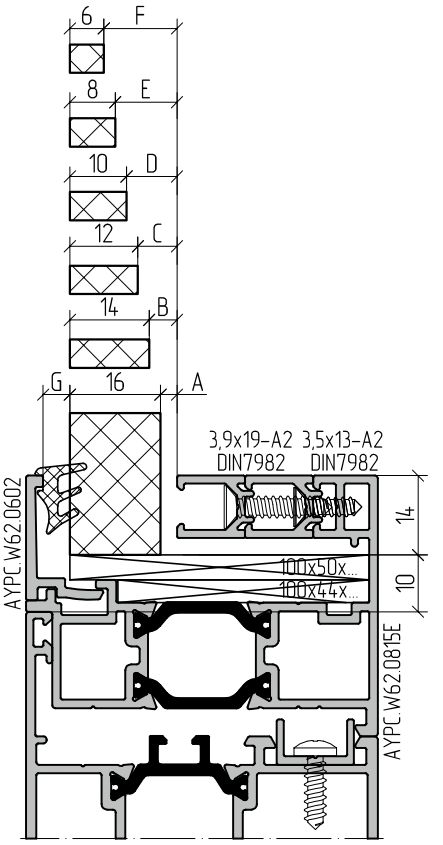

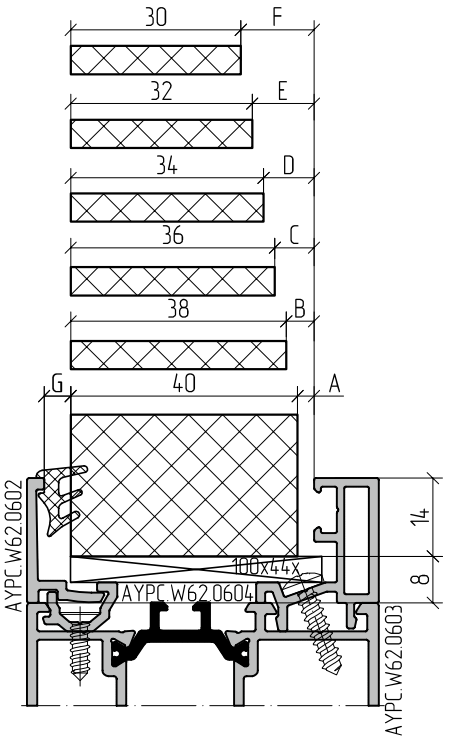

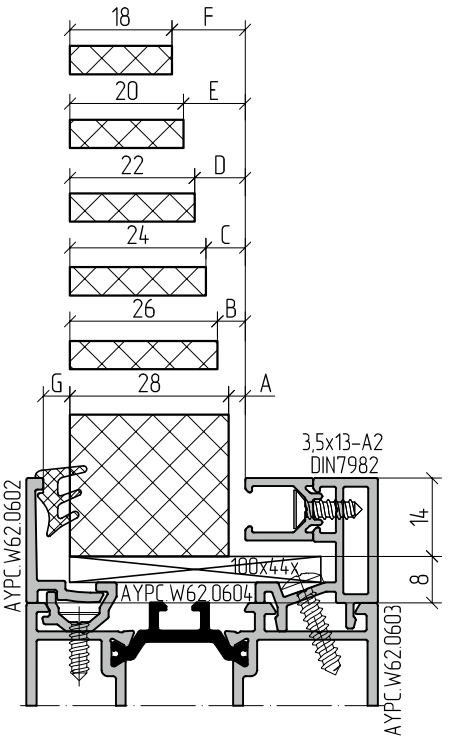

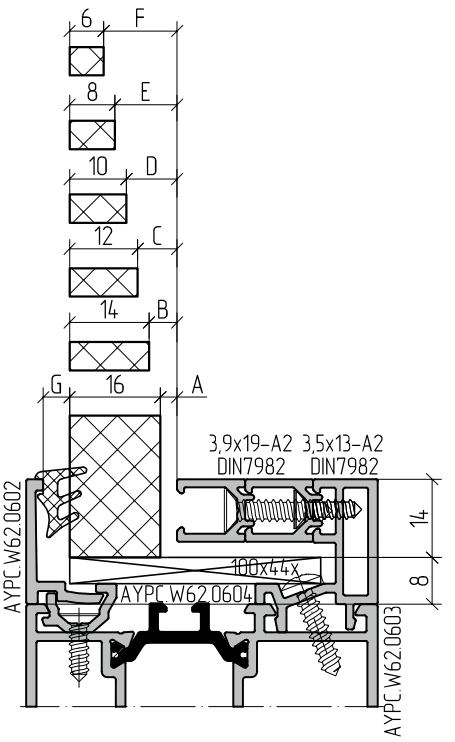

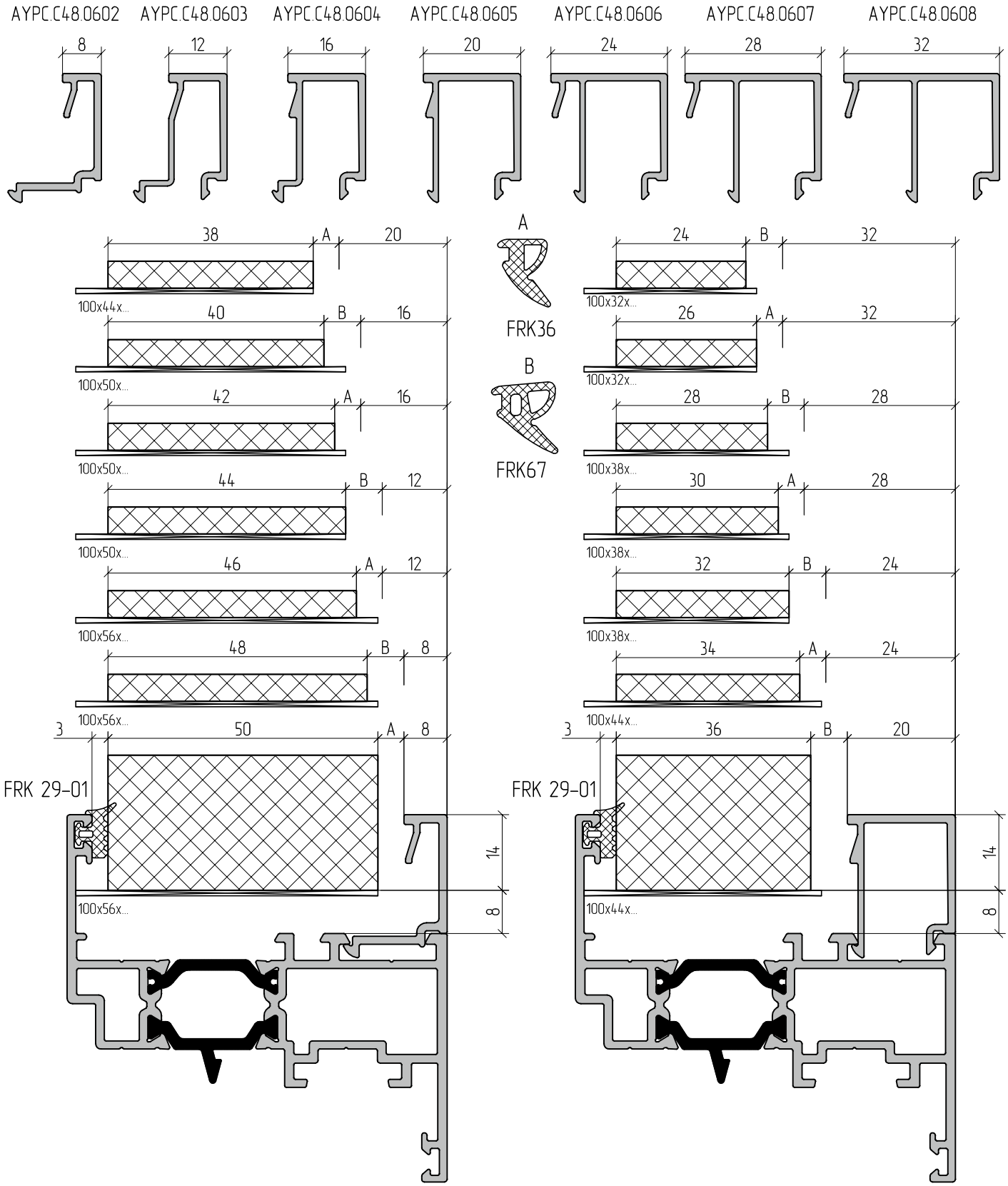

Note:

1 – The **AYPC.W62.0917** bearing support is used for infill units in **AYPC.W62.0221E, AYPC.W62.0222E, AYPC.W62.0223E** sashes and **AYPC.W62.0321E** transom

2 – Data given in the table is for reference, the values are suitable for preliminary calculation . In case of practical use, it's necessary to check their validity on the basis of actual parameters, such as accuracy of infill unit manufacturing (tolerances); accuracy of gaskets manufacturing (tolerances); conditions of gasket installation and system assemblage; tolerances for glass bead profile and tolerances for combined profiles assemblage.

For correct system operation the gaskets must be force fitted .

ALUTECH ALT W62
WINDOW
AND DOOR SYSTEM

WINDOWS. SECTIONS AND JUNCTION

07

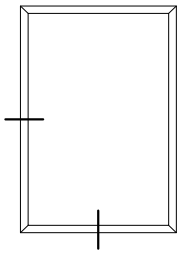

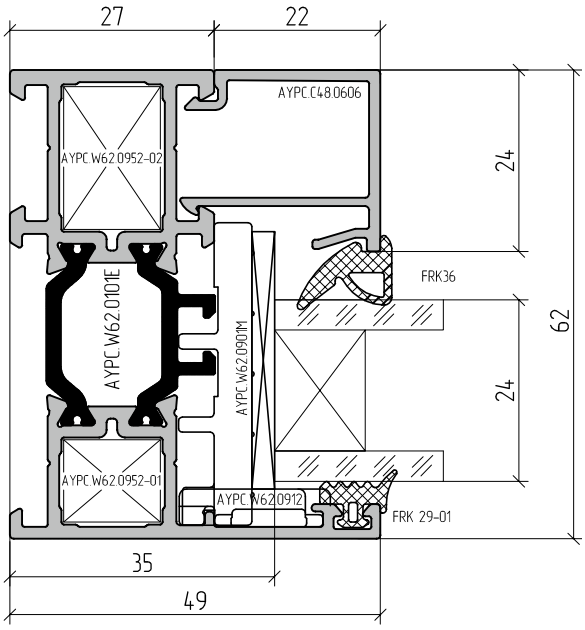
27
22
AYPC.C48.0606
AYPC.W62.0952-02
24
FRK36
AYPC.W62.0101E
AYPC.W62.0901M
62
24
AYPC.W62.0952-01
AYPC.W62.0912
FRK 29-01
35
49

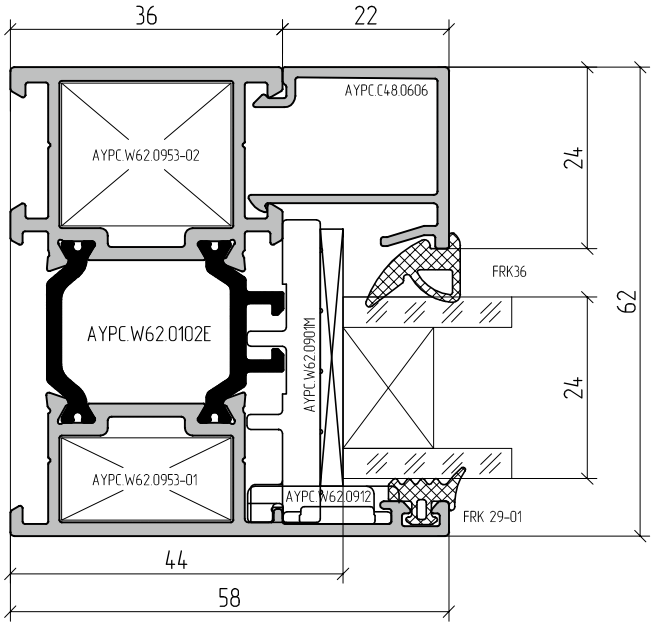
36
22
AYPC.C48.0606
AYPC.W62.0953-02
24
FRK36
AYPC.W62.0102E
AYPC.W62.0901M
62
24
AYPC.W62.0953-01
AYPC.W62.0912
FRK 29-01
44
58

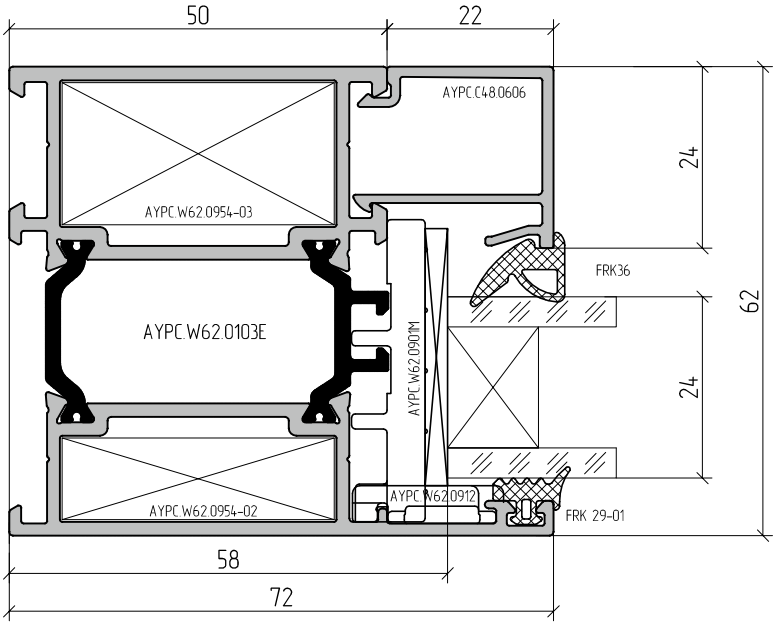
50
22
AYPC.C48.0606
24
AYPC.W62.0954-03
FRK36
AYPC.W62.0103E
AYPC.W62.0901M
62
24
AYPC.W62.0954-02
AYPC.W62.0912
FRK 29-01
58
72

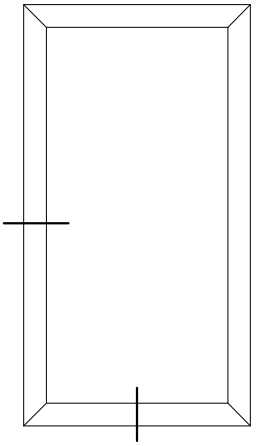

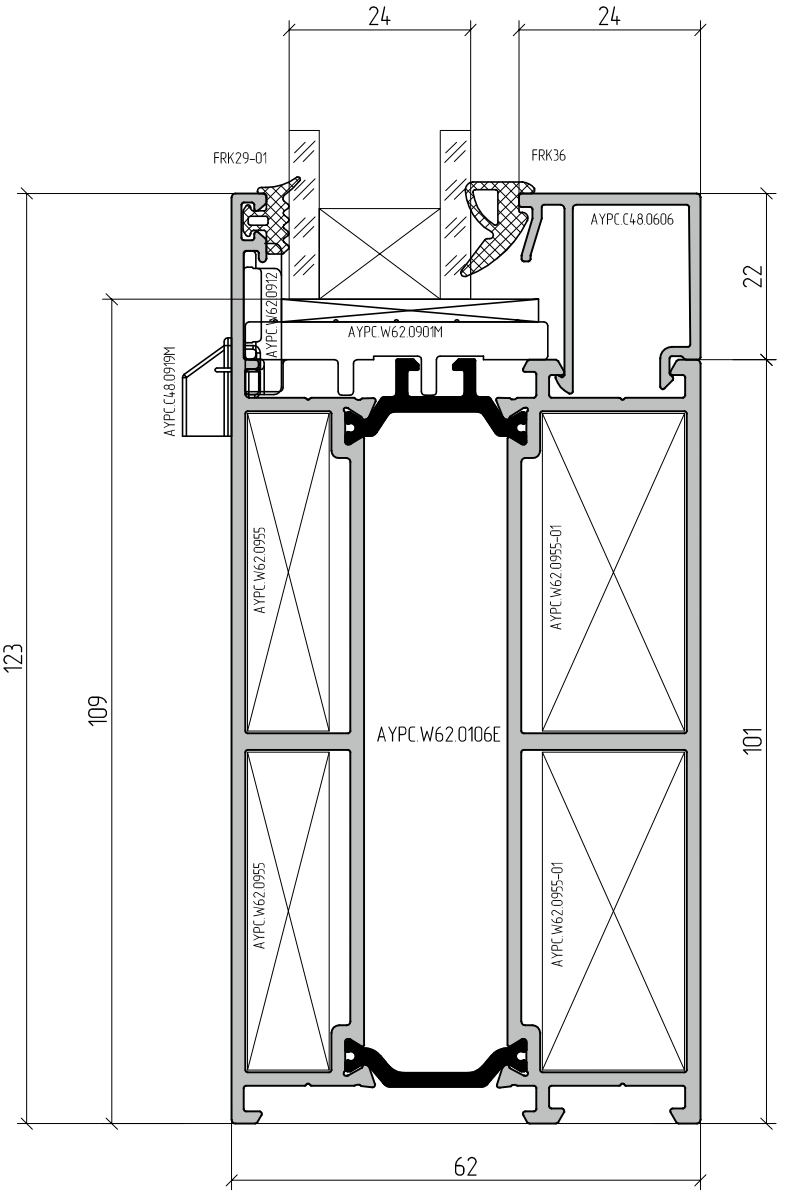
24
24
FRK29-01
FRK36
AYPC.C48.0606
22
AYPC.W62.0912
AYPC.W62.0901M
AYPC.C48.0919M
AYPC.W62.0955
AYPC.W62.0955-01
123
109
AYPC.W62.0106E
101
AYPC.W62.0955
AYPC.W62.0955-01
62

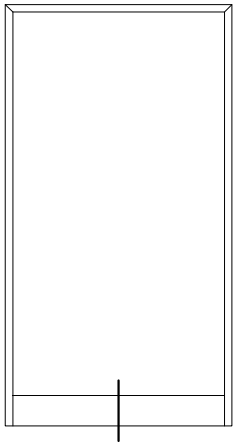

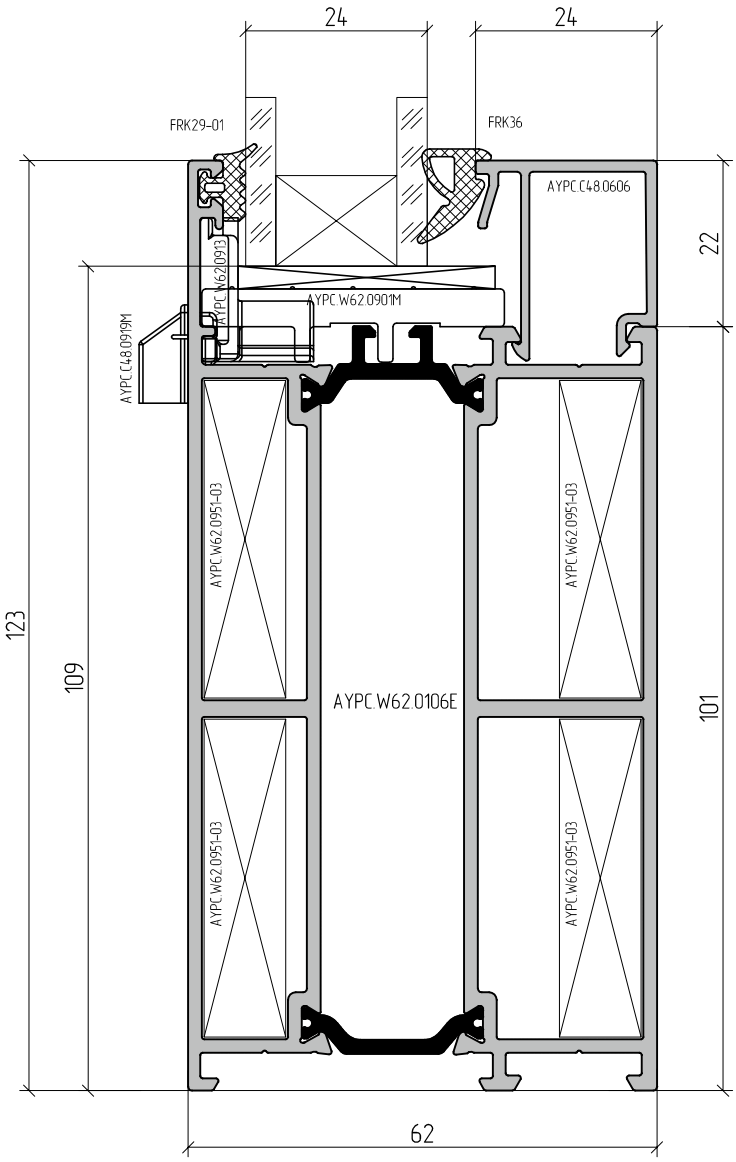
24
24
FRK29-01
FRK36
AYPC.C48.0606
22
AYPC.W62.0913
AYPC.W62.0901M
AYPC.C48.0919M
AYPC.W62.0951-03
AYPC.W62.0951-03
123
109
AYPC.W62.0106E
101
AYPC.W62.0951-03
AYPC.W62.0951-03
62

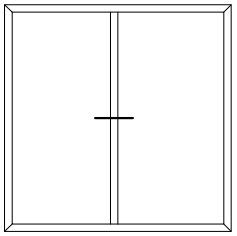

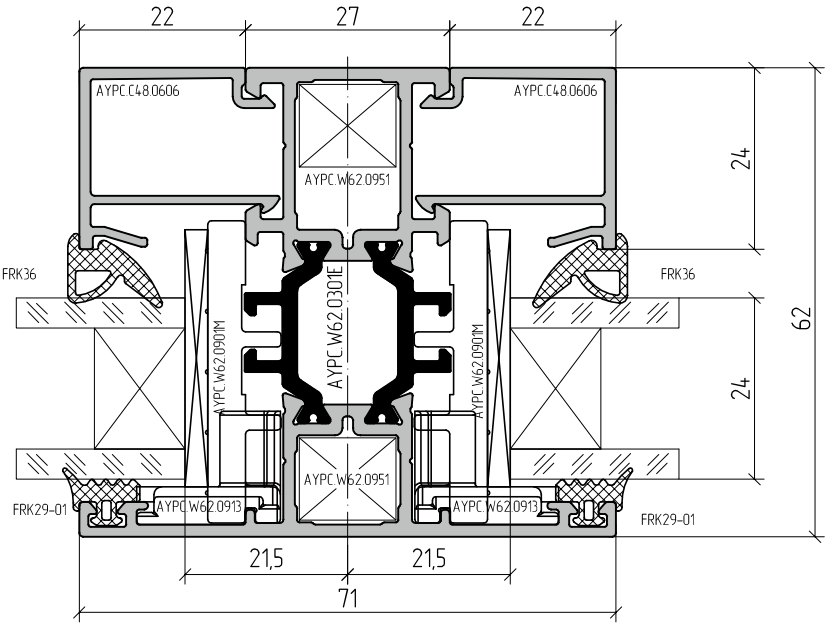
22
27
22
AYPC.C48.0606
AYPC.C48.0606
AYPC.W62.0951
24
FRK36
FRK36
AYPC.W62.0301E
AYPC.W62.0901M
AYPC.W62.0901M
62
24
AYPC.W62.0951
FRK29-01
AYPC.W62.0913
AYPC.W62.0913
FRK29-01
21,5
21,5
71

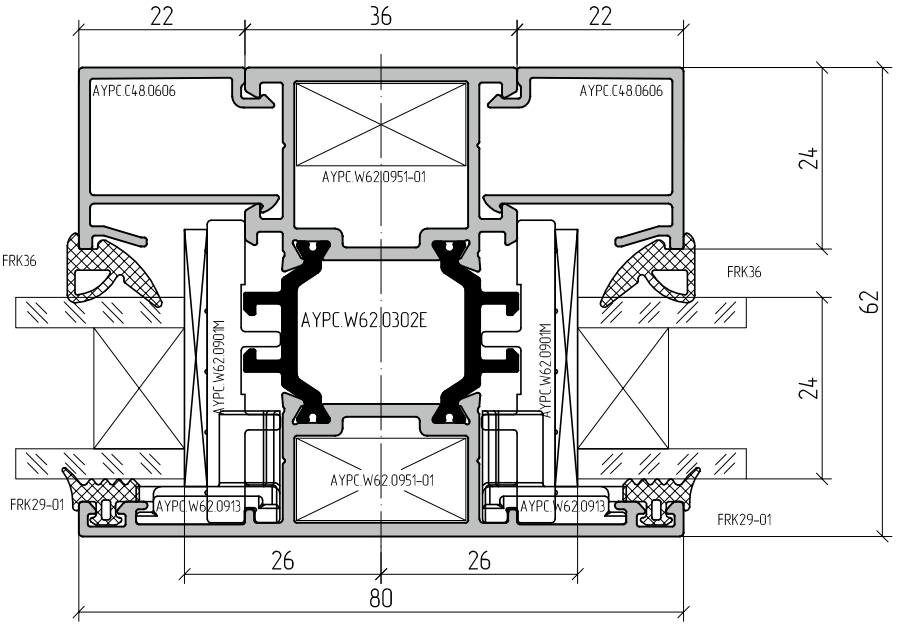
22
36
22
AYPC.C48.0606
AYPC.C48.0606
AYPC.W62.0951-01
24
FRK36
FRK36
AYPC.W62.0302E
AYPC.W62.0901M
AYPC.W62.0901M
62
24
AYPC.W62.0951-01
FRK29-01
AYPC.W62.0913
AYPC.W62.0913
FRK29-01
26
26
80

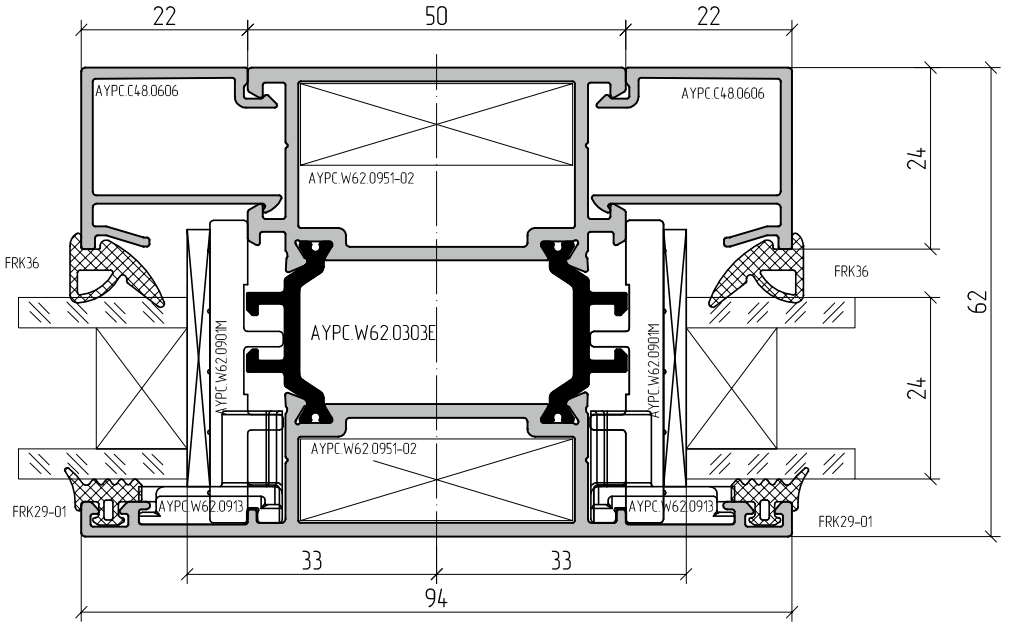
22
50
22
AYPC.C48.0606
AYPC.C48.0606
AYPC.W62.0951-02
24
FRK36
FRK36
AYPC.W62.0303E
AYPC.W62.0901M
AYPC.W62.0901M
62
24
AYPC.W62.0951-02
FRK29-01
AYPC.W62.0913
AYPC.W62.0913
FRK29-01
33
33
94

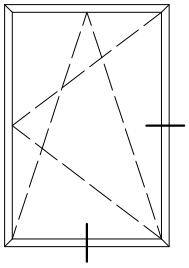

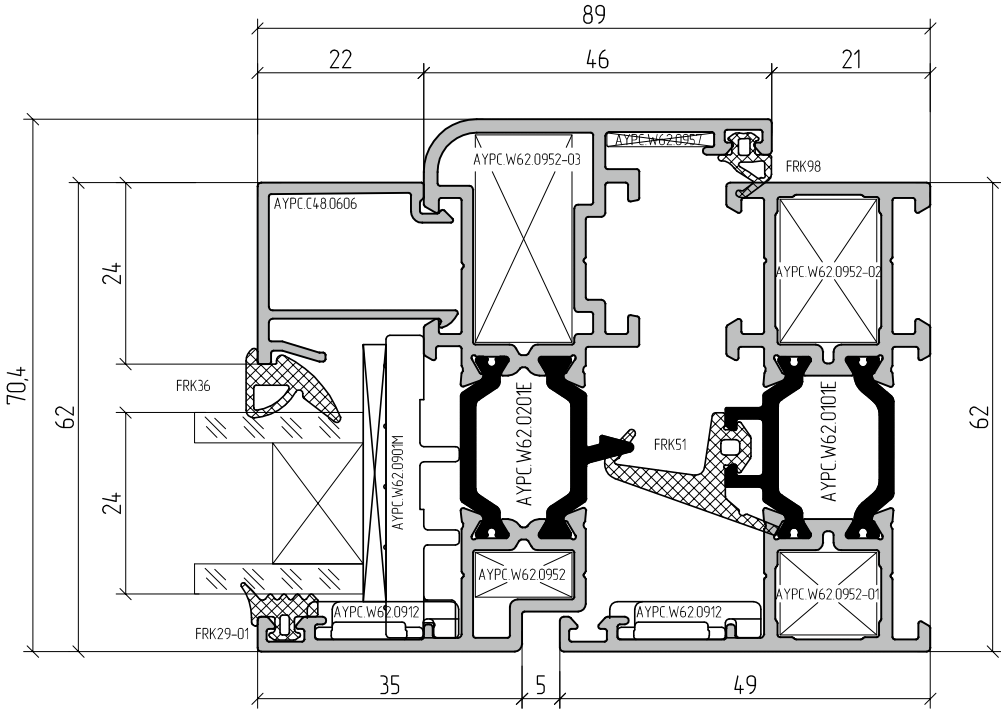
89
22
46
21
AYPC.W62.0952-03
AYPC.W62.0957
FRK98
AYPC.C48.0606
AYPC.W62.0952-02
24
70,4
62
FRK36
AYPC.W62.0901M
AYPC.W62.0201E
FRK51
AYPC.W62.0101E
62
24
AYPC.W62.0952
AYPC.W62.0952-01
AYPC.W62.0912
AYPC.W62.0912
FRK29-01
35
5
49

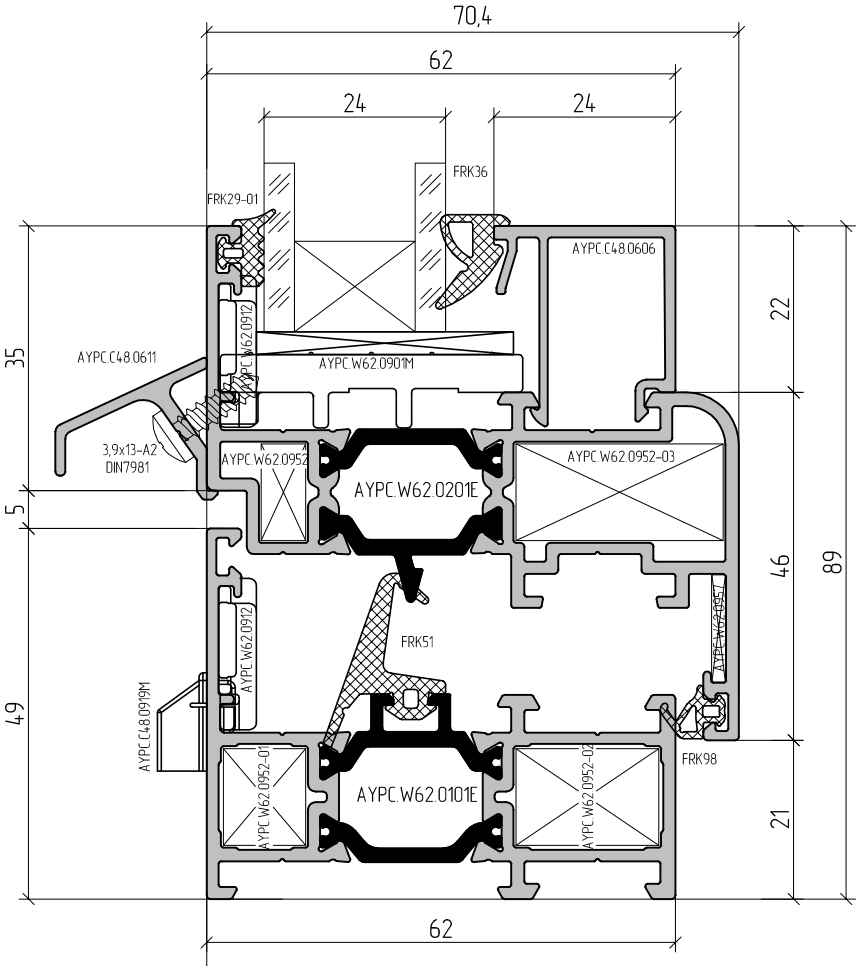
70,4
62
24
24
FRK36
FRK29-01
AYPC.C48.0606
22
35
AYPC.C48.0611
AYPC.W62.0912
AYPC.W62.0901M
3,9x13-A2
DIN7981
AYPC.W62.0952
AYPC.W62.0201E
AYPC.W62.0952-03
5
46
89
AYPC.W62.0912
FRK51
AYPC.W62.0957
49
AYPC.C48.0919M
AYPC.W62.0952-01
AYPC.W62.0101E
AYPC.W62.0952-02
FRK98
21
62

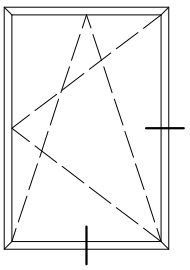

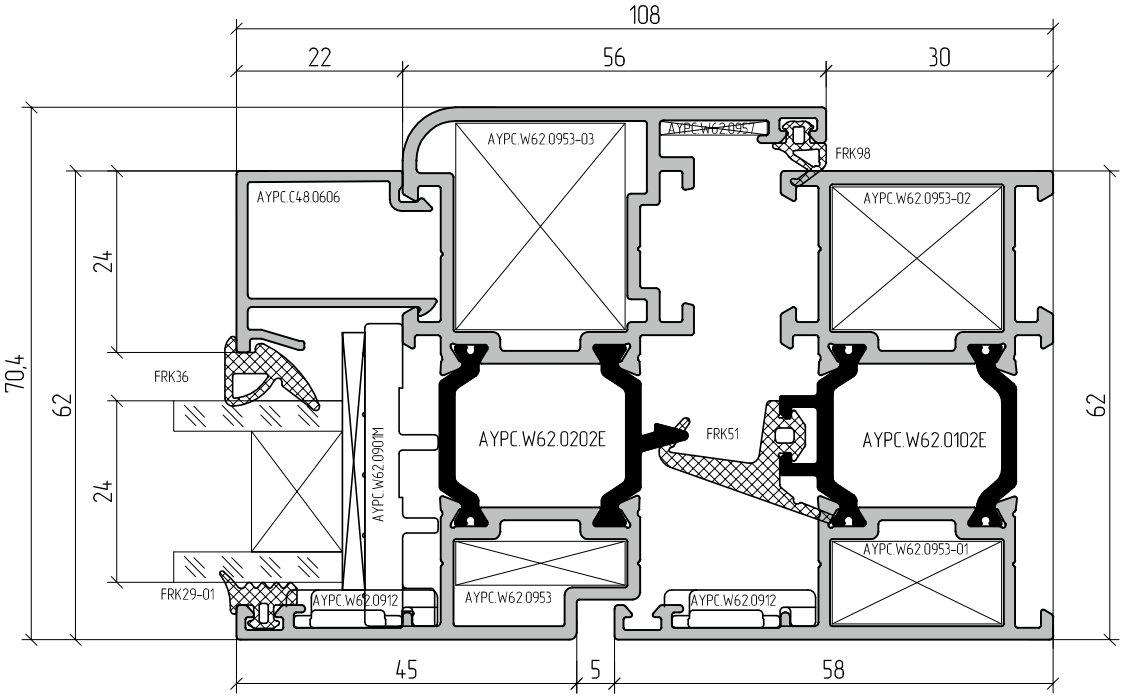
108
22
56
30
AYPC.W62.0953-03
AYPC.W62.0957
FRK98
AYPC.C48.0606
AYPC.W62.0953-02
24
70,4
62
FRK36
AYPC.W62.0901M
AYPC.W62.0202E
FRK51
AYPC.W62.0102E
62
24
AYPC.W62.0953-01
FRK29-01
AYPC.W62.0912
AYPC.W62.0953
AYPC.W62.0912
45
5
58

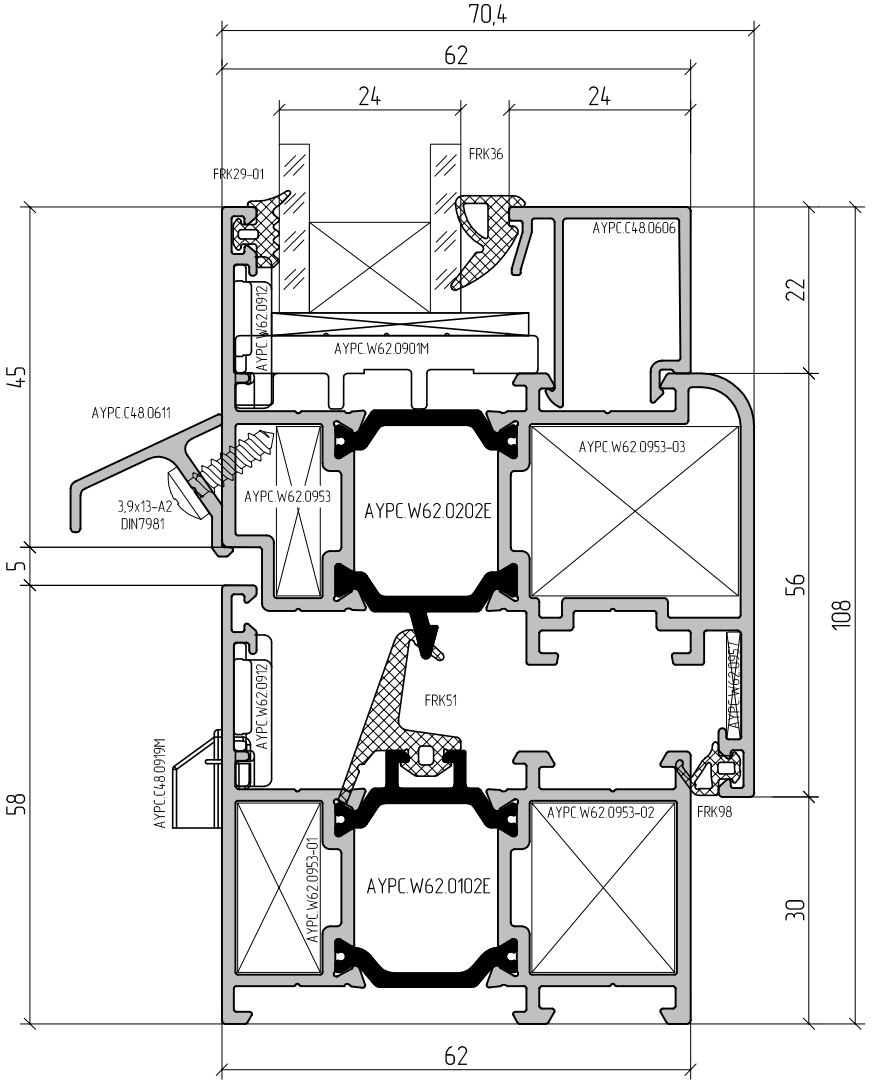
70,4
62
24
24
FRK29-01
FRK36
AYPC.C48.0606
22
AYPC.W62.0912
AYPC.W62.0901M
45
AYPC.C48.0611
AYPC.W62.0953-03
AYPC.W62.0953
AYPC.W62.0202E
3,9x13-A2
DIN7981
5
56
108
AYPC.W62.0912
FRK51
AYPC.W62.0957
AYPC.C48.0919M
58
AYPC.W62.0953-02
FRK98
AYPC.W62.0953-01
AYPC.W62.0102E
30
62

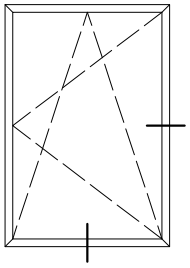

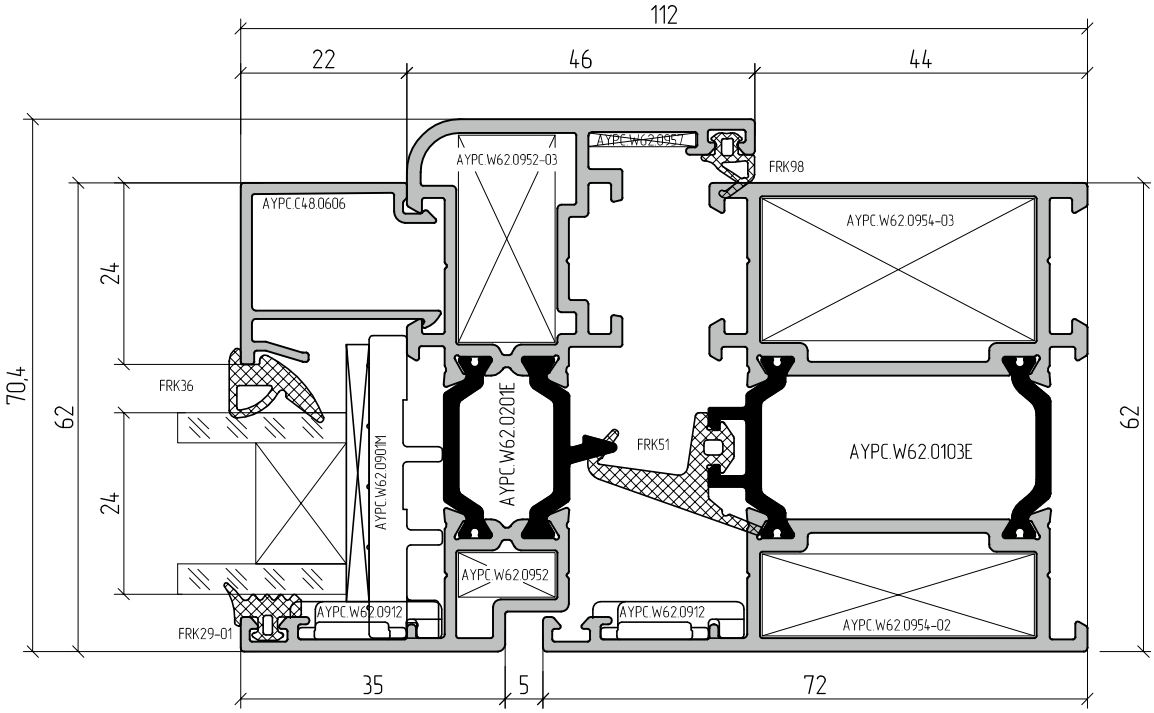
112
22
46
44
AYPC.W62.0952-03
AYPC.W62.0957
FRK98
AYPC.C48.0606
AYPC.W62.0954-03
24
70,4
62
FRK36
AYPC.W62.0901M
AYPC.W62.0201E
FRK51
AYPC.W62.0103E
62
24
AYPC.W62.0952
AYPC.W62.0912
AYPC.W62.0912
AYPC.W62.0954-02
FRK29-01
35
5
72

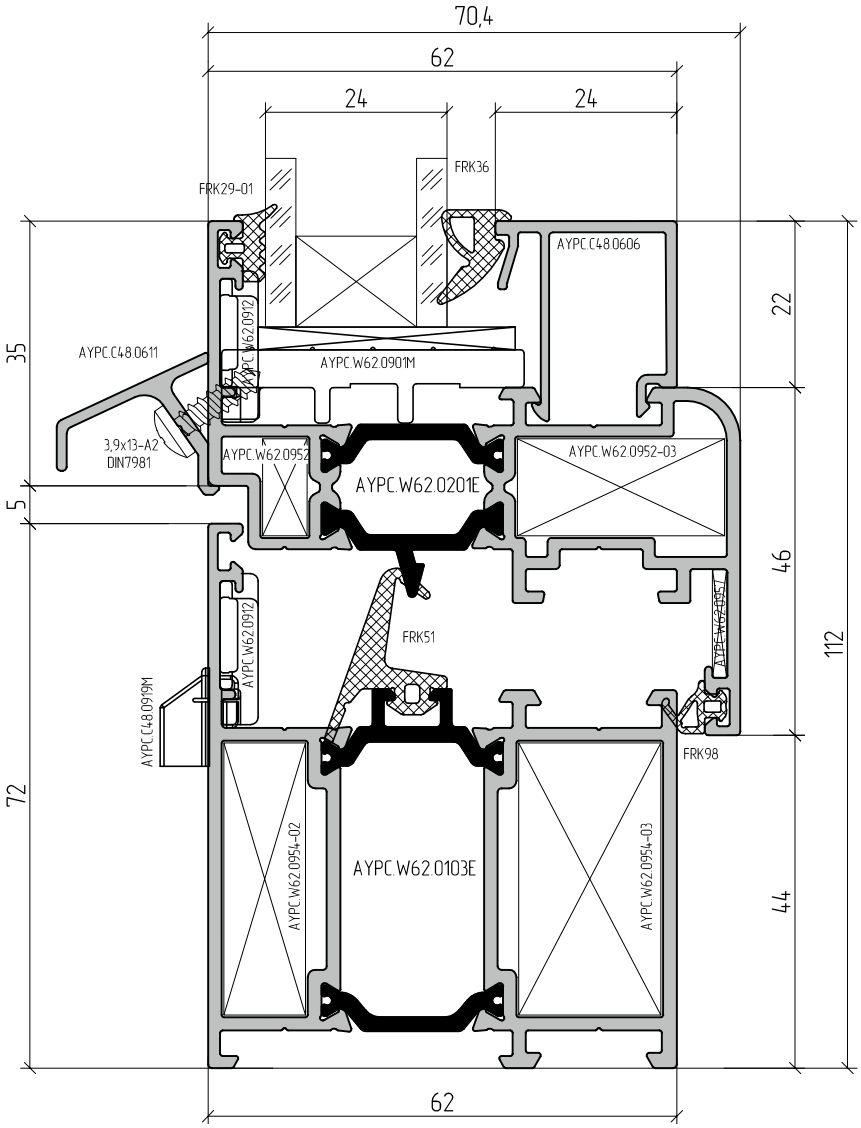
70,4
62
24
24
FRK29-01
FRK36
AYPC.C48.0606
22
35
AYPC.C48.0611
AYPC.W62.0912
AYPC.W62.0901M
3,9x13-A2
DIN7981
AYPC.W62.0952
AYPC.W62.0952-03
AYPC.W62.0201E
5
46
AYPC.W62.0912
FRK51
AYPC.W62.0957
112
AYPC.C48.0919M
FRK98
72
AYPC.W62.0954-02
AYPC.W62.0103E
AYPC.W62.0954-03
44
62

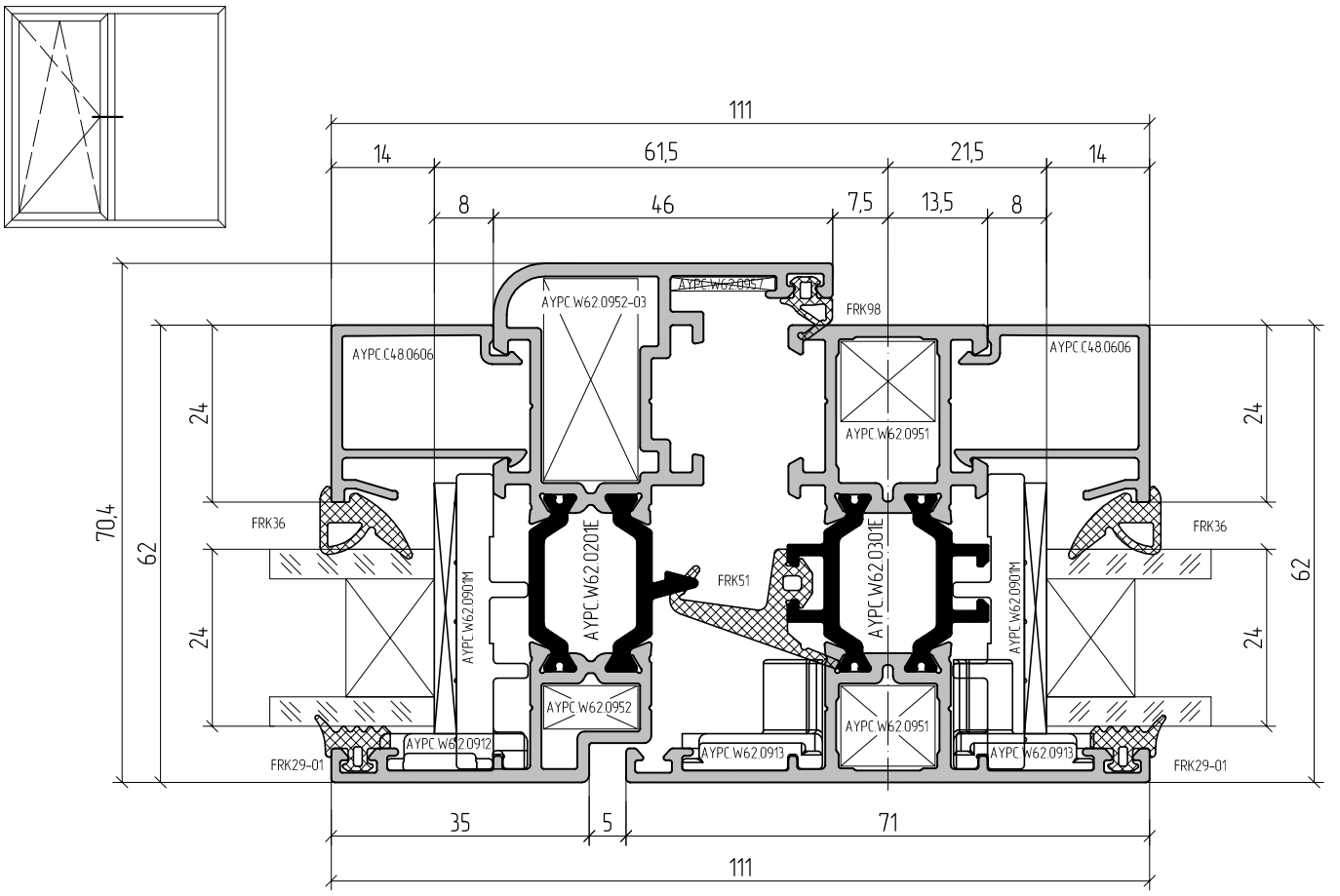
111
14
61,5
21,5
14
8
46
7,5
13,5
8
AYPC.W62.0952-03
AYPC.W62.0957
FRK98
AYPC.C48.0606
AYPC.C48.0606
AYPC.W62.0951
24
24
70,4
62
FRK36
FRK36
AYPC.W62.0201E
AYPC.W62.0301E
FRK51
AYPC.W62.0901M
AYPC.W62.0901M
62
24
24
AYPC.W62.0952
AYPC.W62.0951
AYPC.W62.0912
AYPC.W62.0913
AYPC.W62.0913
FRK29-01
FRK29-01
35
5
71
111

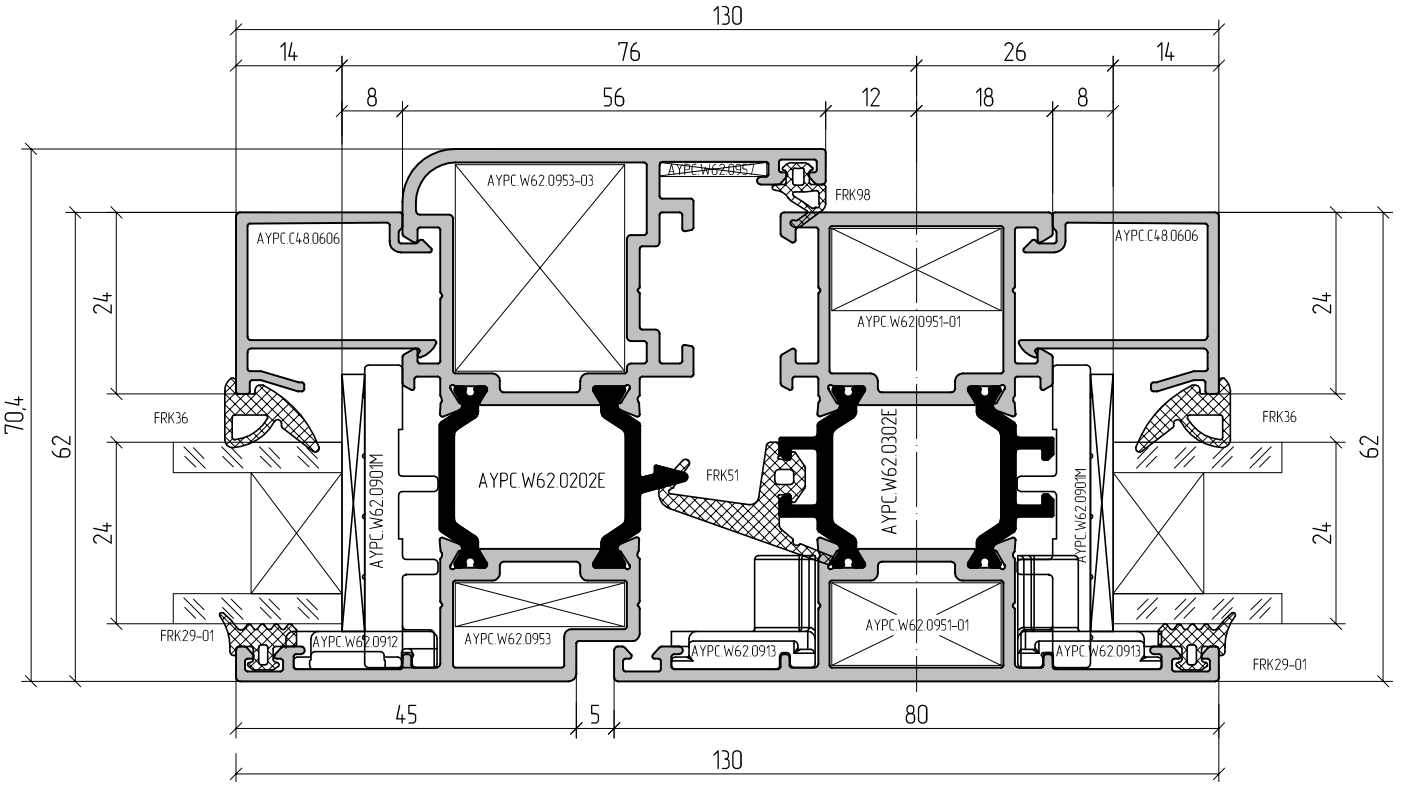
130
14
76
26
14
8
56
12
18
8
AYPC.W62.0953-03
AYPC.W62.0957
FRK98
AYPC.C48.0606
AYPC.C48.0606
AYPC.W62.0951-01
24
24
70,4
62
FRK36
FRK36
AYPC.W62.0202E
FRK51
AYPC.W62.0302E
AYPC.W62.0901M
AYPC.W62.0901M
62
24
24
AYPC.W62.0953
AYPC.W62.0951-01
AYPC.W62.0912
AYPC.W62.0913
AYPC.W62.0913
FRK29-01
FRK29-01
45
5
80
130

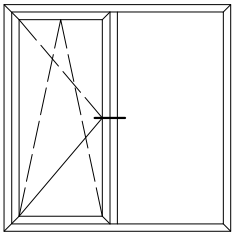

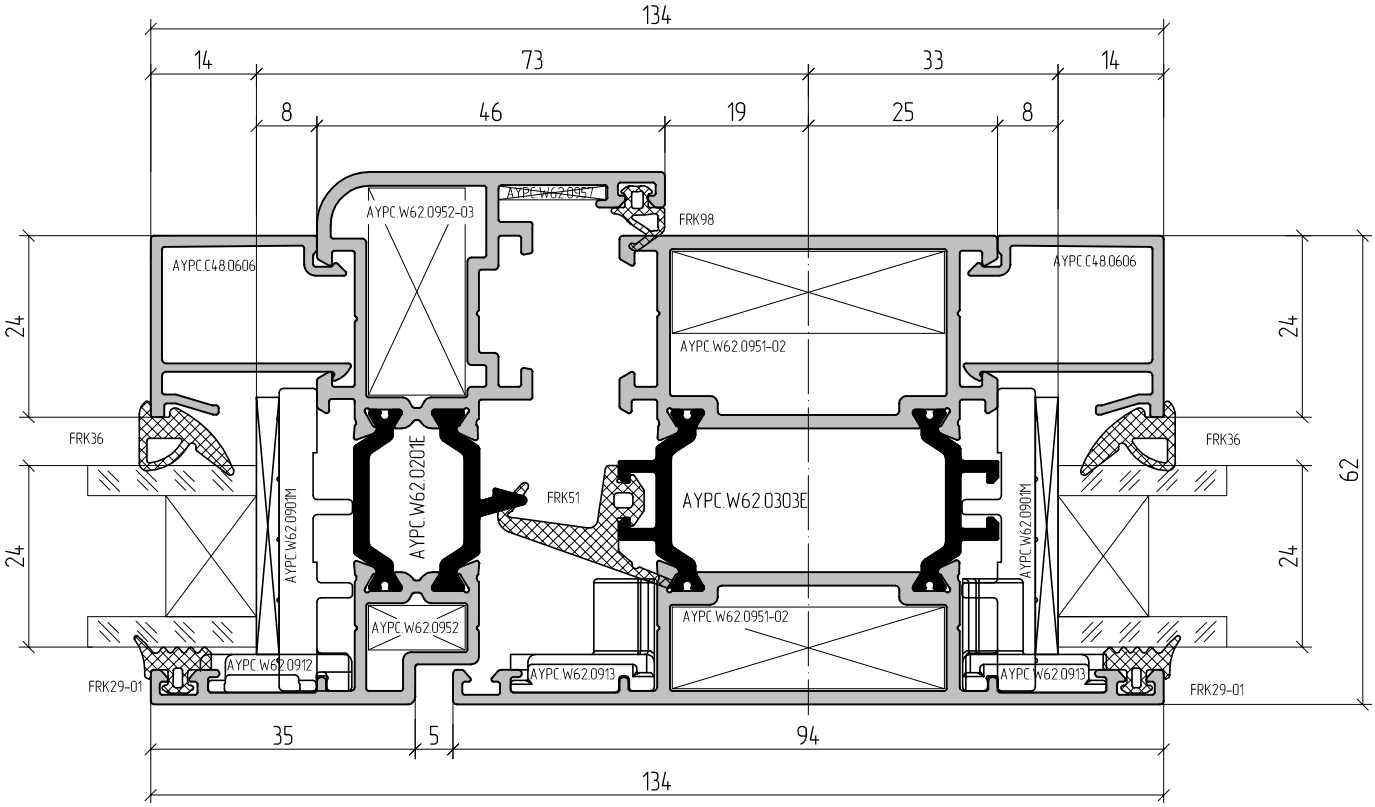
134
14
73
33
14
8
46
19
25
8
AYPC.W62.0952-03
AYPC.W62.0957
FRK98
AYPC.C48.0606
AYPC.C48.0606
AYPC.W62.0951-02
24
24
62
FRK36
FRK36
AYPC.W62.0201E
AYPC.W62.0901M
FRK51
AYPC.W62.0303E
AYPC.W62.0901M
24
24
AYPC.W62.0952
AYPC.W62.0951-02
AYPC.W62.0912
AYPC.W62.0913
AYPC.W62.0913
FRK29-01
FRK29-01
35
5
94
134

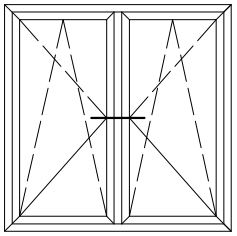

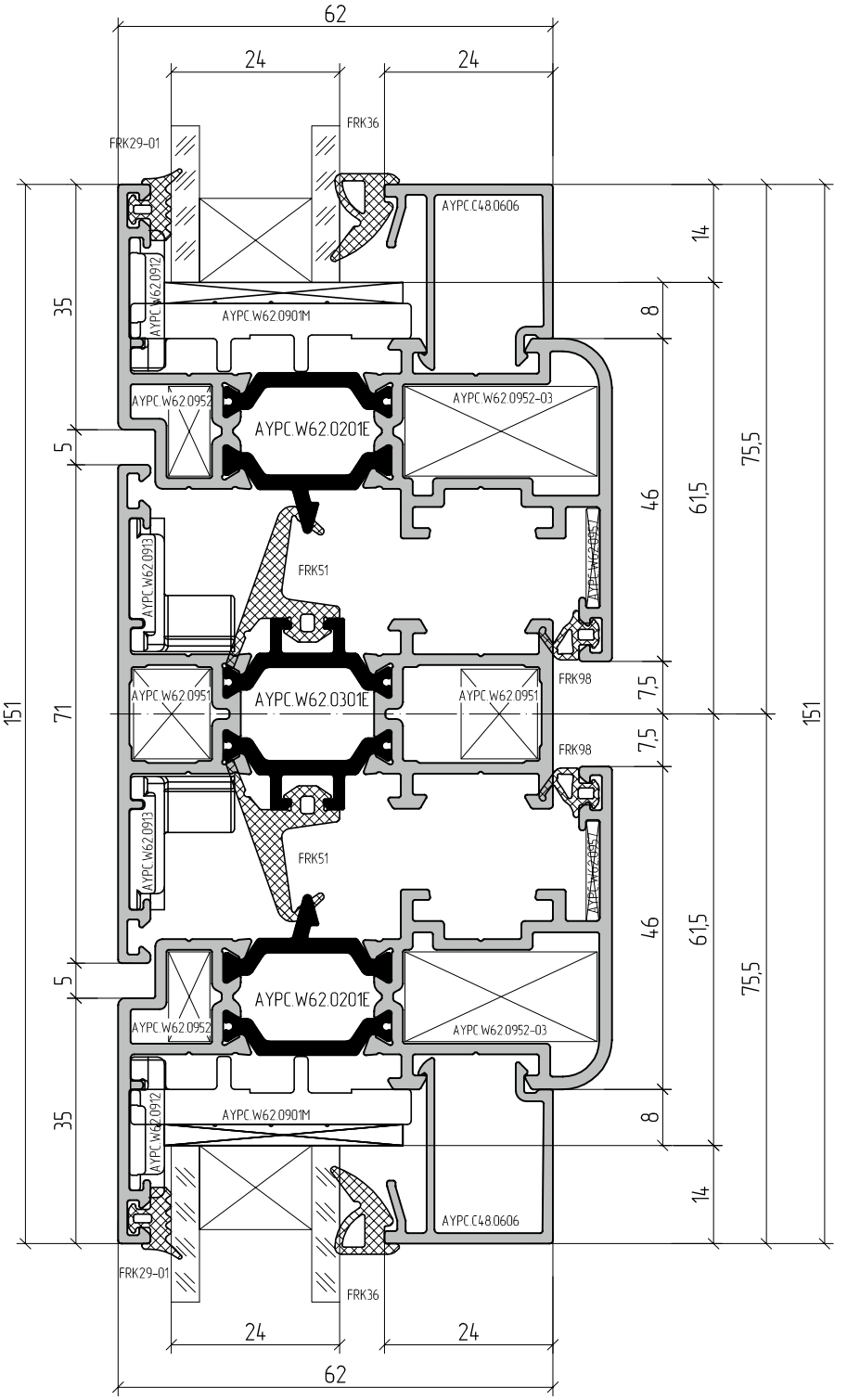
62
24
24
FRK29-01
FRK36
AYPC.C48.0606
AYPC.W62.0912
AYPC.W62.0901M
AYPC.W62.0952
AYPC.W62.0952-03
AYPC.W62.0201E
AYPC.W62.0913
FRK51
AYPC.W62.0951
AYPC.W62.0301E
FRK98
151
71
35
5
14
8
46
61,5
75,5
7,5

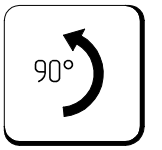
90°

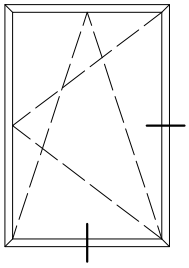

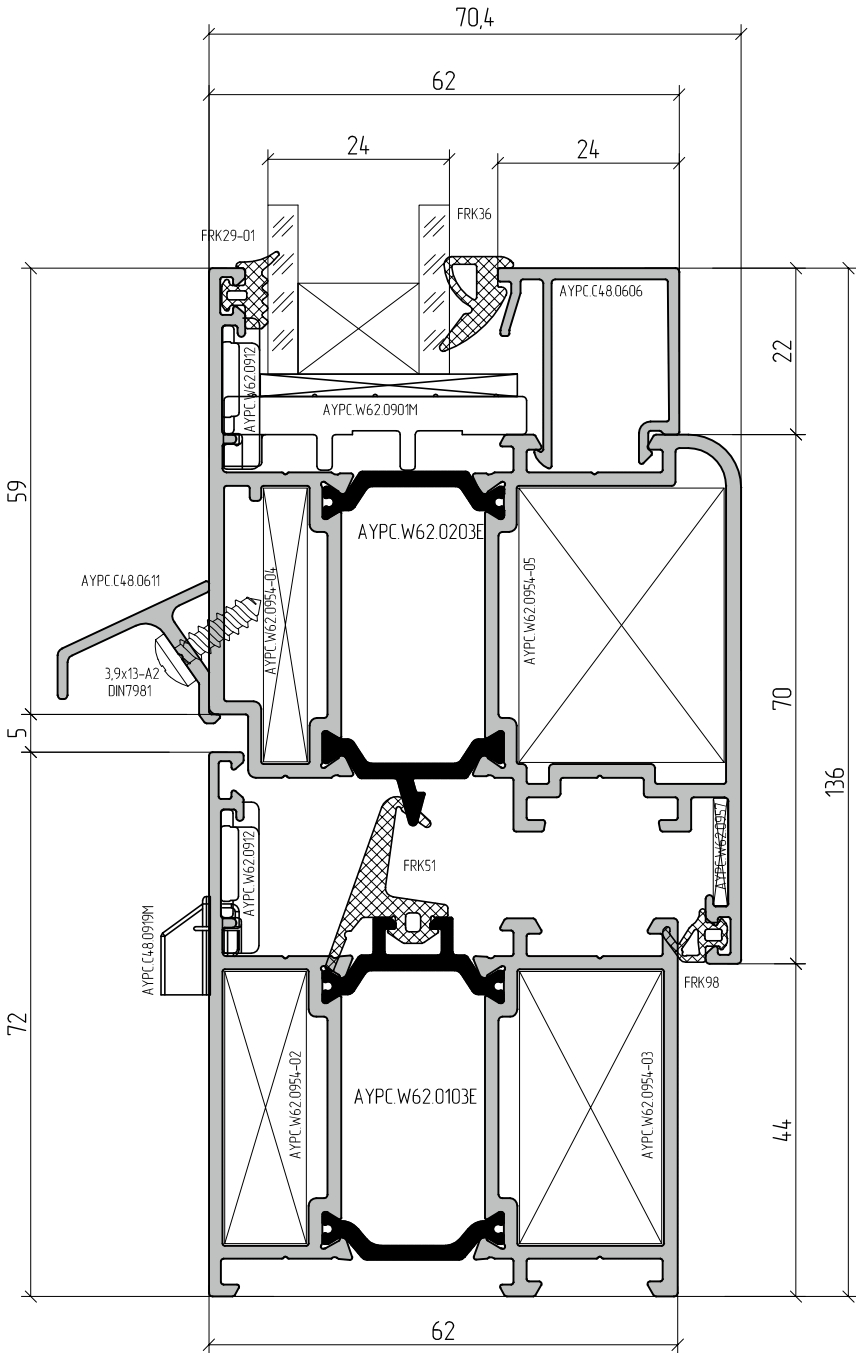
70,4
62
24
24
FRK36
FRK29-01
AYPC.C48.0606
AYPC.W62.0912
AYPC.W62.0901M
22
59
AYPC.W62.0203E
AYPC.C48.0611
AYPC.W62.0954-04
AYPC.W62.0954-05
3,9x13-A2
DIN7981
5
70
136
AYPC.W62.0912
FRK51
AYPC.W62.0954-01
AYPC.C48.0919M
FRK98
72
AYPC.W62.0954-02
AYPC.W62.0103E
AYPC.W62.0954-03
44
62

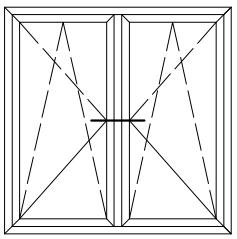

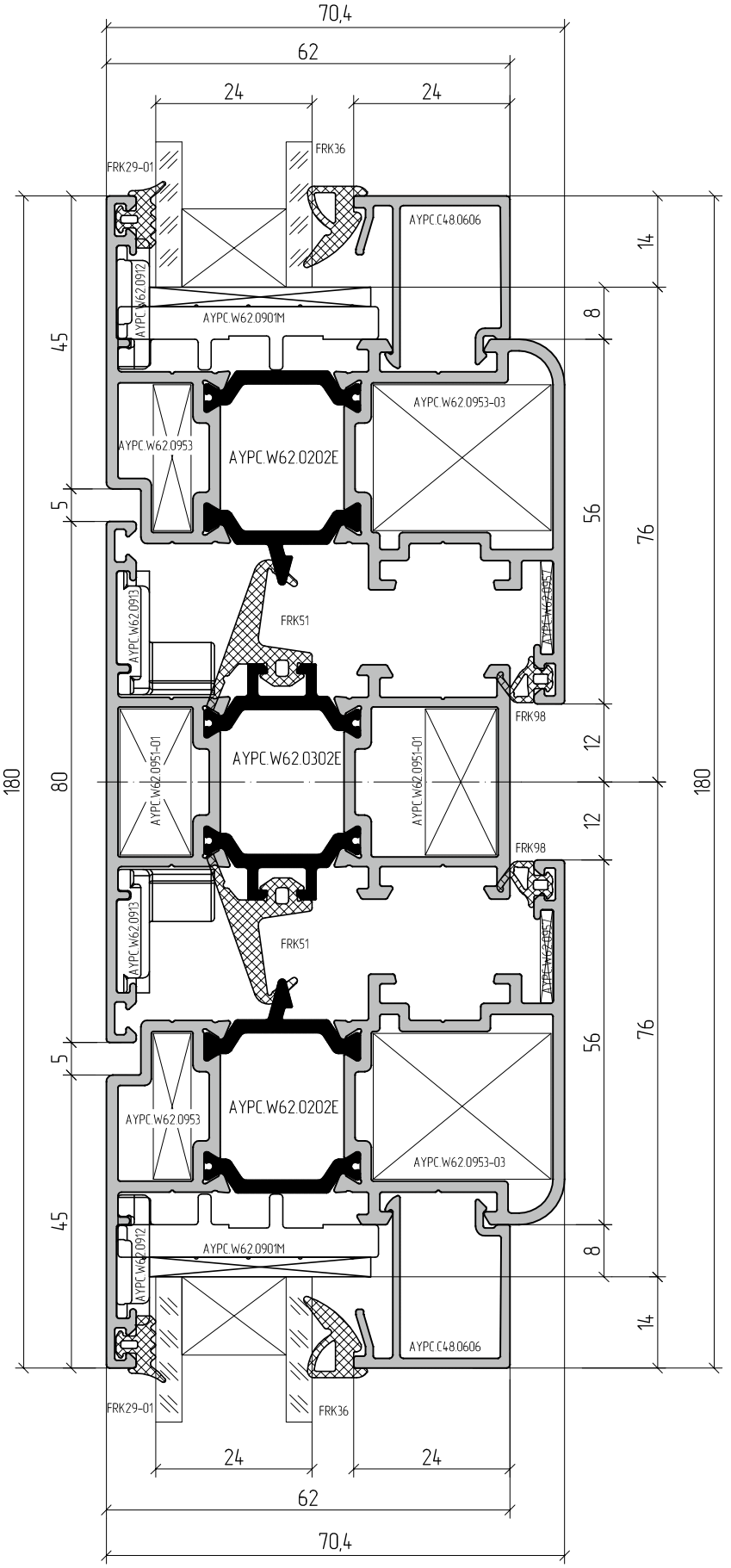
70,4
62
24
24
FRK29-01
FRK36
AYPC.C48.0606
AYPC.W62.0912
AYPC.W62.0901M
AYPC.W62.0953-03
AYPC.W62.0953
AYPC.W62.0202E
AYPC.W62.0913
FRK51
AYPC.W62.0957
FRK98
AYPC.W62.0951-01
AYPC.W62.0302E
14
8
45
5
56
76
180
80
12

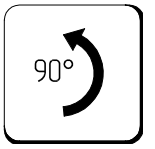
90°

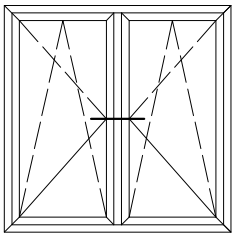

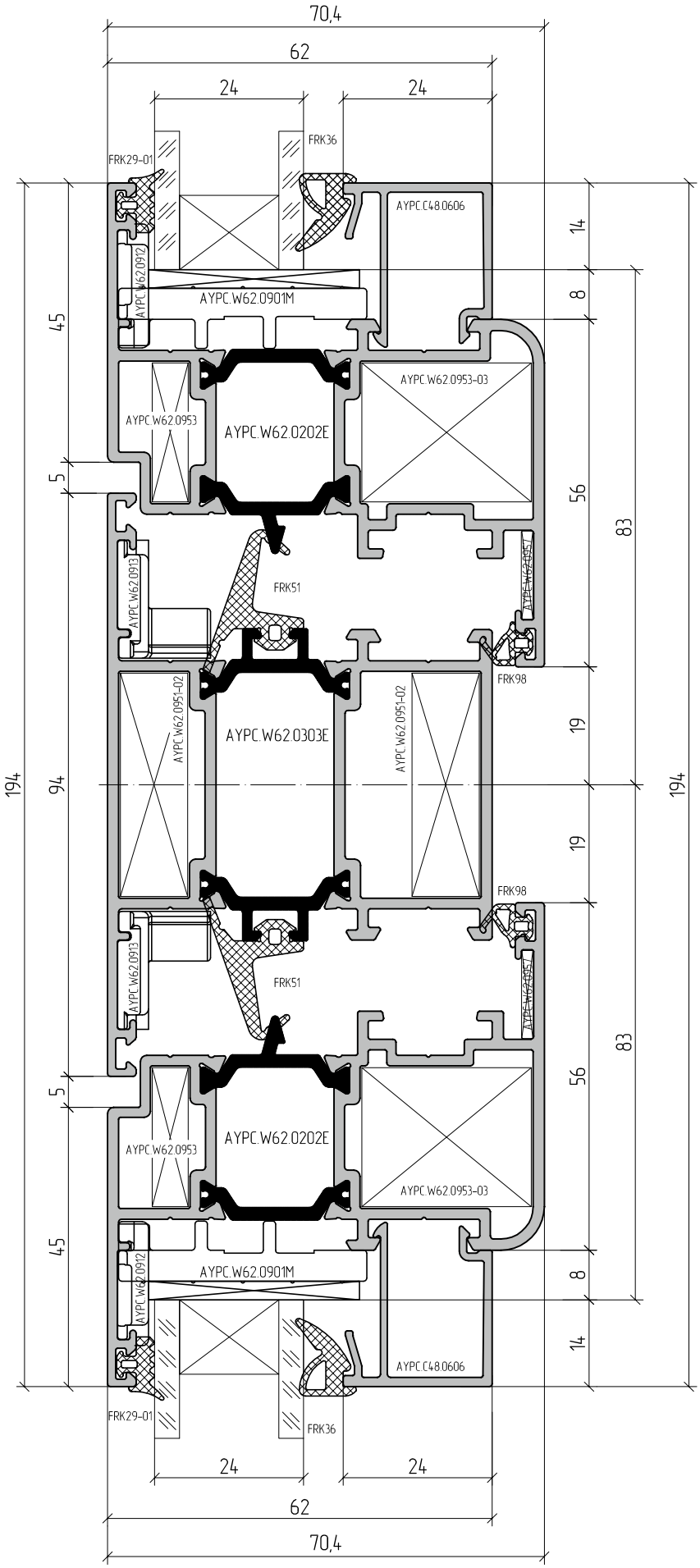
70,4
62
24
24
FRK36
FRK29-01
AYPC.C48.0606
AYPC.W62.0912
AYPC.W62.0901M
AYPC.W62.0953-03
AYPC.W62.0953
AYPC.W62.0202E
AYPC.W62.0913
FRK51
AYPC.W62.0957
FRK98
AYPC.W62.0951-02
AYPC.W62.0303E
14
8
45
5
56
83
19
94
194

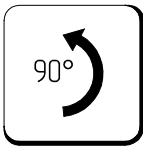
90°

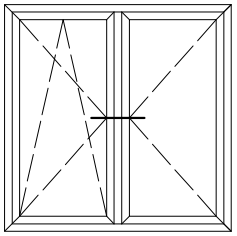

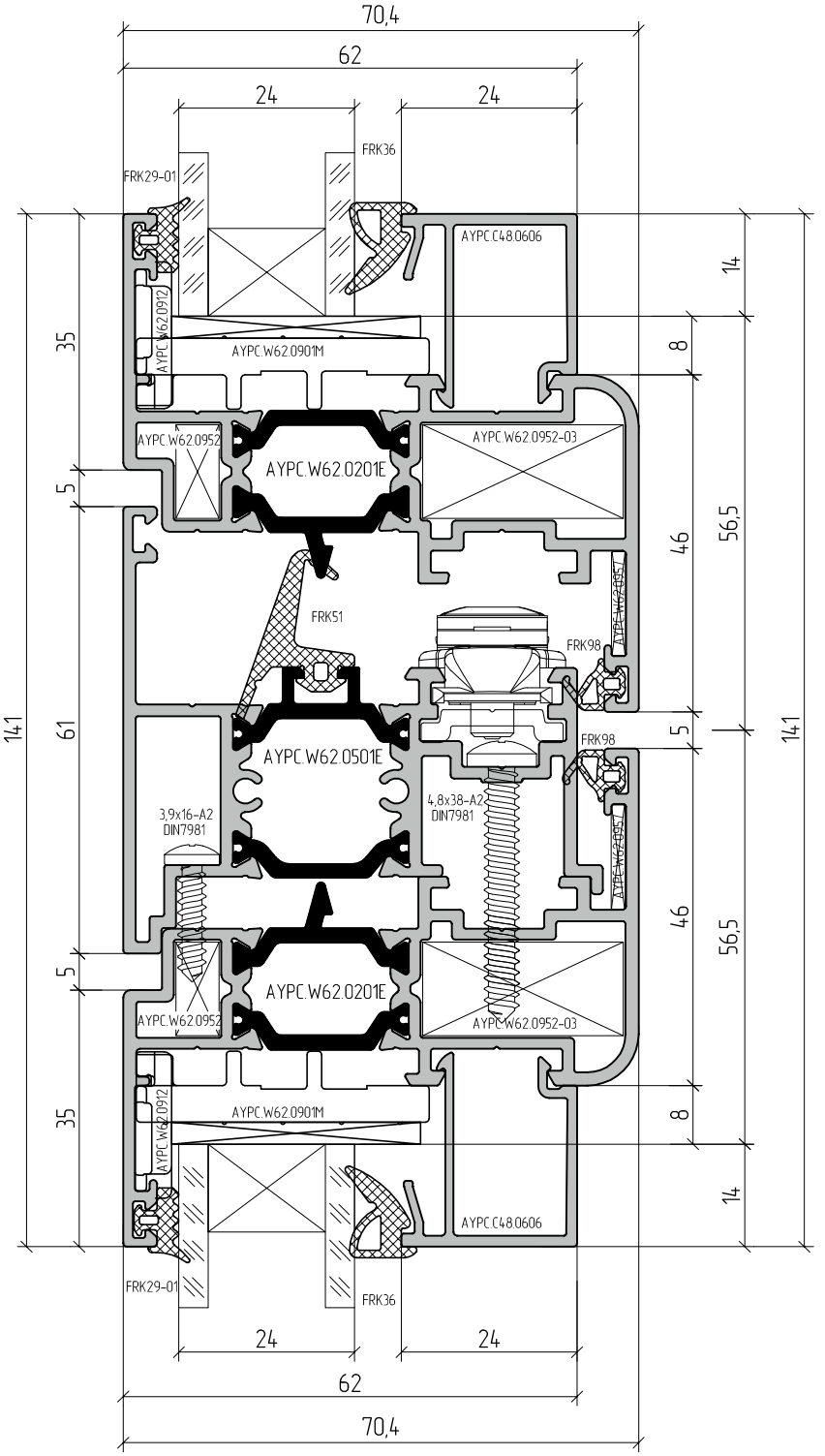
70,4
62
24
24
FRK36
FRK29-01
AYPC.C48.0606
AYPC.W62.0912
AYPC.W62.0901M
AYPC.W62.0952
AYPC.W62.0952-03
AYPC.W62.0201E
AYPC.W62.0501E
FRK51
FRK98
AYPC.W62.0957
3,9x16-A2
DIN7981
4,8x38-A2
DIN7981
14,1
61
35
5
46
56,5
8
14

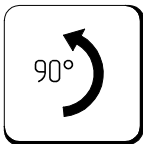
90°

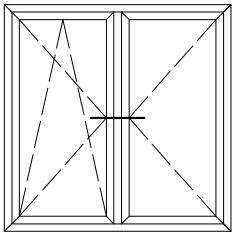

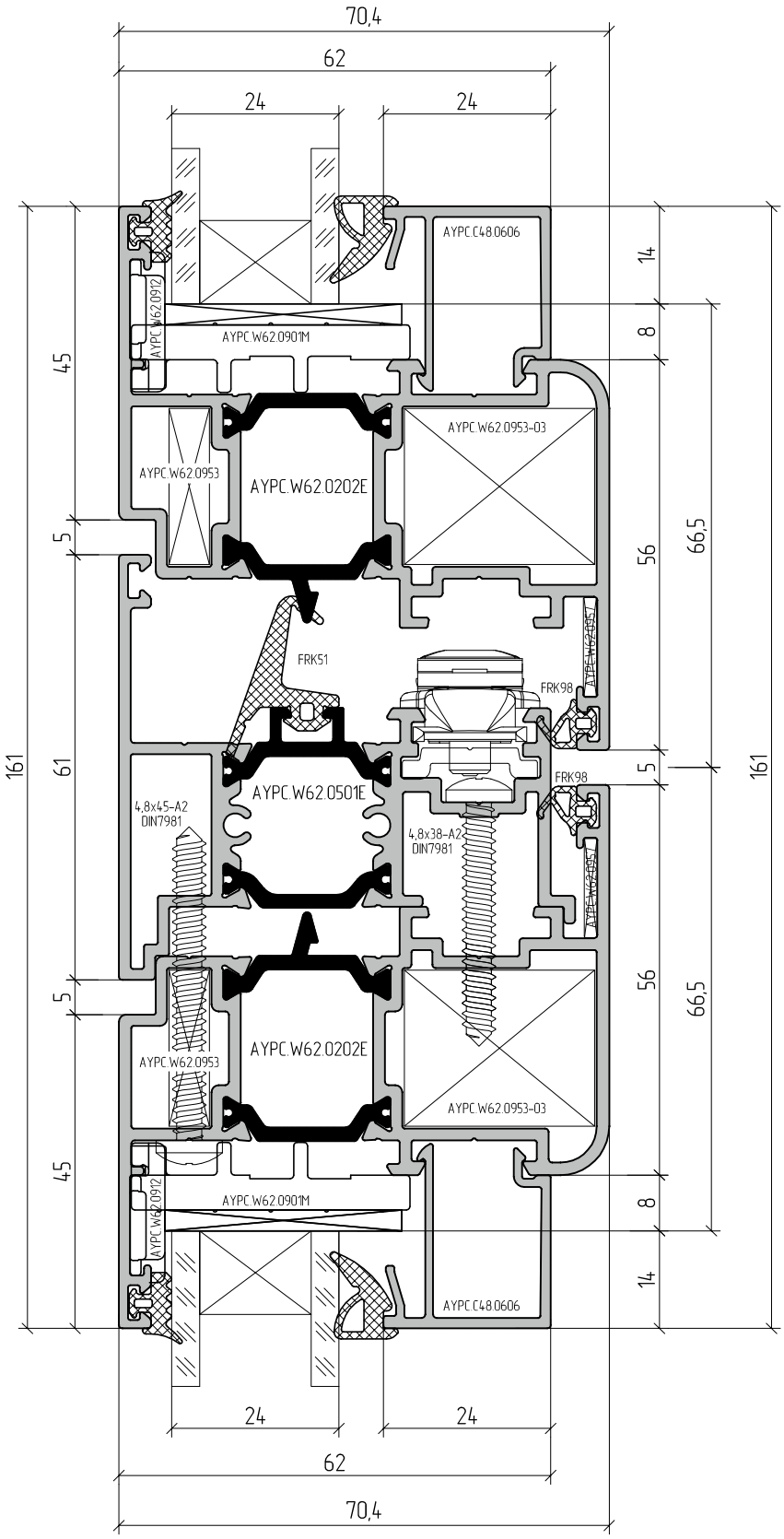
70,4
62
24
24
AYPC.C48.0606
AYPC.W62.0912
AYPC.W62.0901M
AYPC.W62.0953-03
AYPC.W62.0953
AYPC.W62.0202E
FRK51
AYPC.W62.0957
FRK98
AYPC.W62.0501E
4,8x45-A2
DIN7981
4,8x38-A2
DIN7981
14
8
45
5
56
66,5
161
61

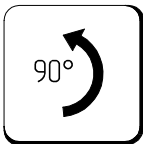
90°

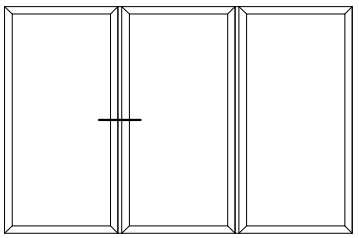

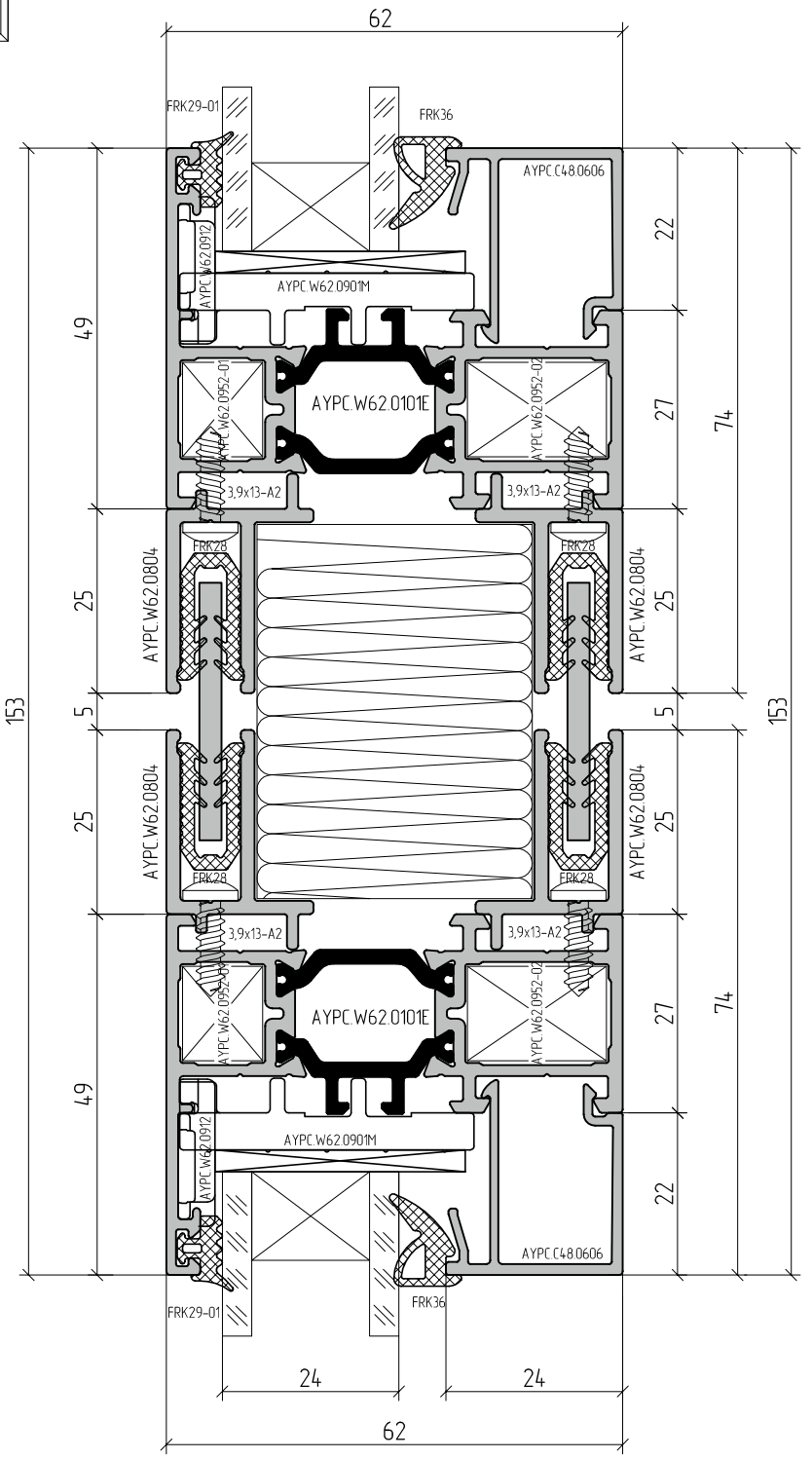
62
FRK29-01
FRK36
AYPC.C48.0606
AYPC.W62.0912
AYPC.W62.0901M
AYPC.W62.0952-01
AYPC.W62.0952-02
AYPC.W62.0101E
3,9x13-A2
FRK28
AYPC.W62.0804
153
49
25
5
22
27
74
24

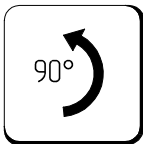
90°

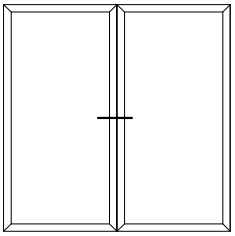

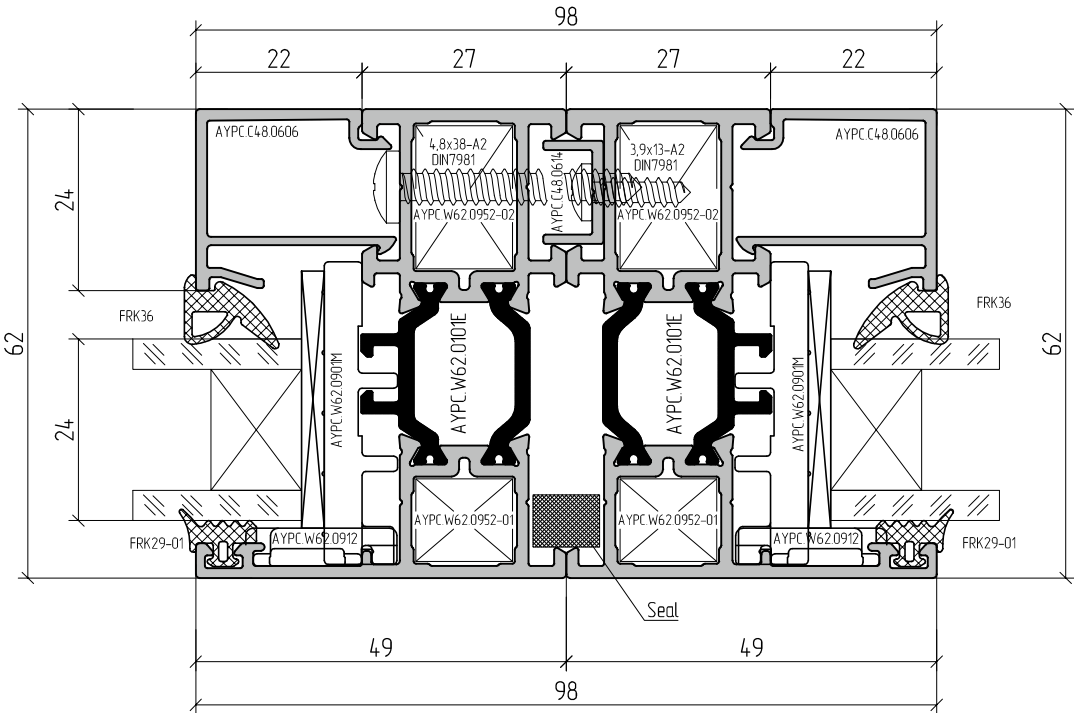
98
22
27
27
22
AYPC C48 0606
4,8x38-A2
DIN7981
AYPC C48 0614
3,9x13-A2
DIN7981
AYPC W62 0952-02
AYPC W62 0952-02
AYPC C48 0606
24
24
62
62
FRK36
FRK36
AYPC W62 0901M
AYPC W62 0101E
AYPC W62 0101E
AYPC W62 0901M
AYPC W62 0952-01
AYPC W62 0952-01
FRK29-01
AYPC W62 0912
AYPC W62 0912
FRK29-01
Seal
49
49
98

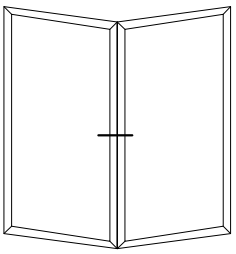

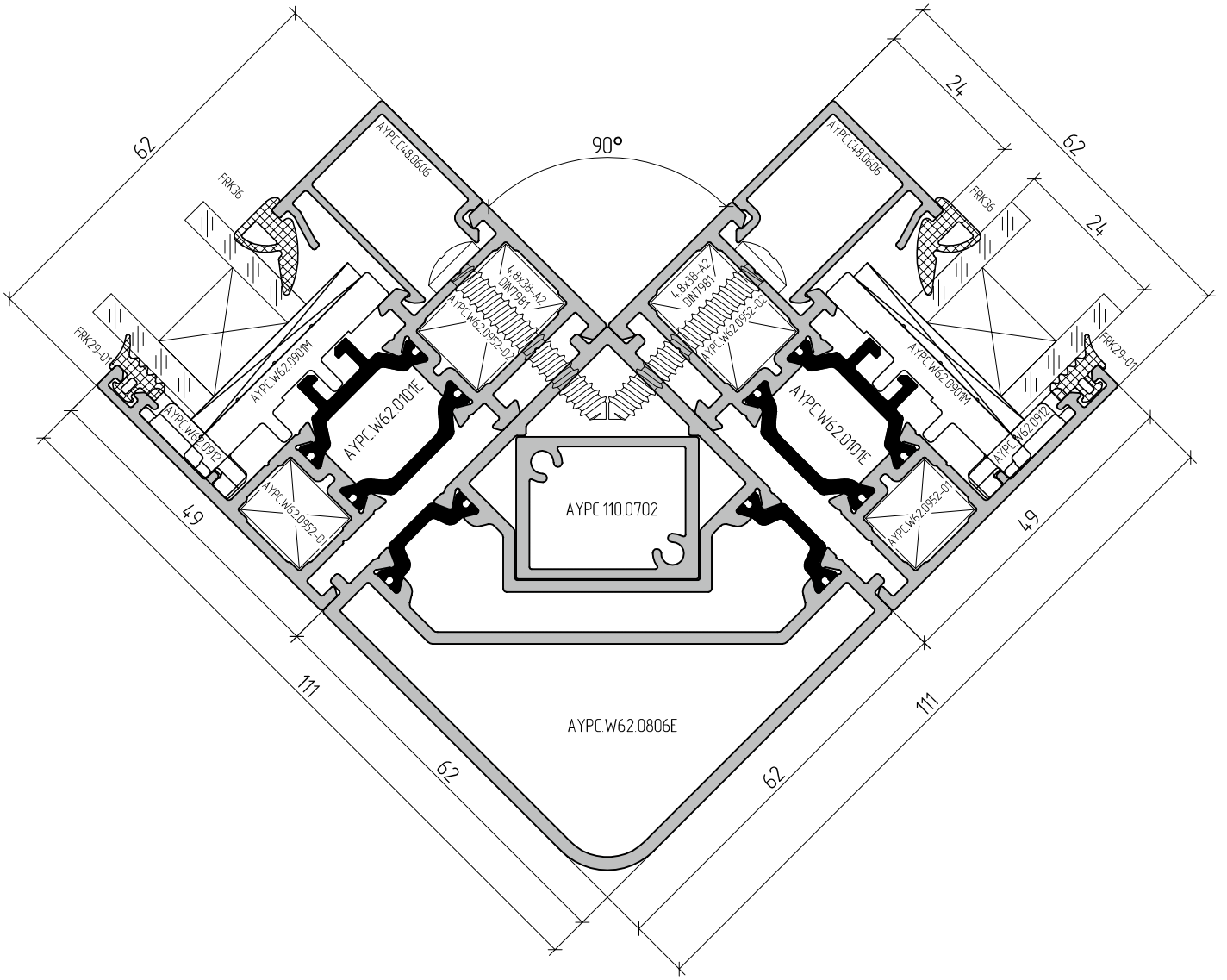
62
90°
24
62
24
AYPC.C48.0606
AYPC.C48.0606
FRK36
FRK36
4.8x38-A2
DIN7981
AYPC.W62.0952-02
4.8x38-A2
DIN7981
AYPC.W62.0952-02
FRK29-01
FRK29-01
AYPC.W62.090/M
AYPC.W62.090/M
AYPC.W62.0912
AYPC.W62.0912
AYPC.W62.0101E
AYPC.W62.0101E
AYPC.W62.0952-01
AYPC.W62.0952-01
AYPC.110.0702
AYPC.W62.0806E
49
49
111
111
62
62

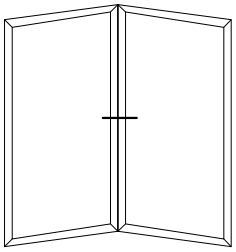

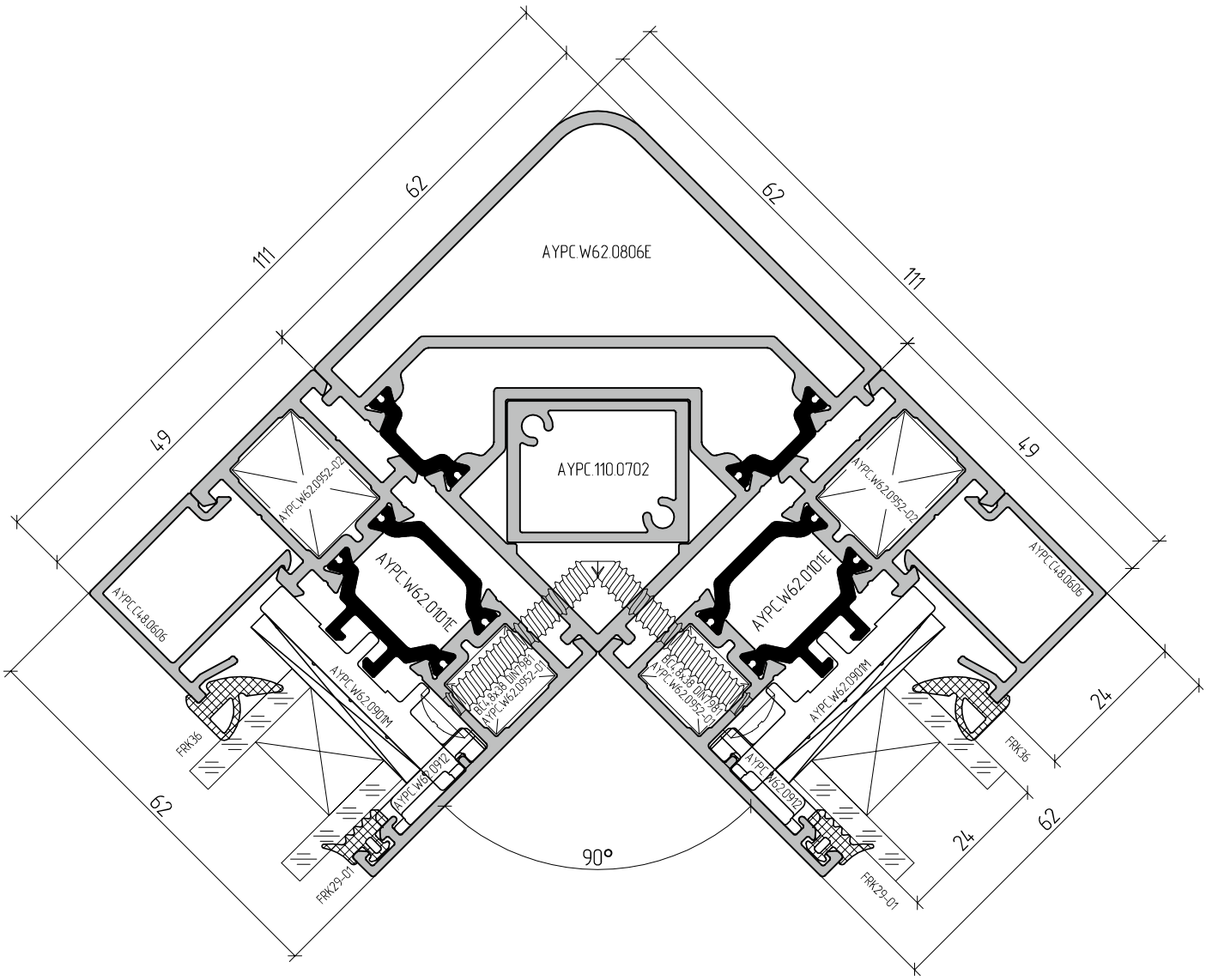
AYPC.W62.0806E
AYPC.110.0702
AYPC.W62.0101E
AYPC.W62.0101E
AYPC.W62.0952-02
AYPC.W62.0952-02
AYPC.C48.0606
AYPC.C48.0606
AYPC.W62.0901M
AYPC.W62.0901M
AYPC.W62.0912
AYPC.W62.0912
FRK36
FRK36
FRK29-01
FRK29-01
90°
111
111
62
62
49
49
62
62
24
24

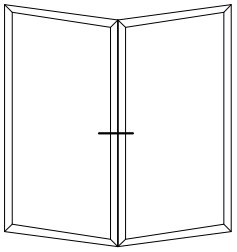

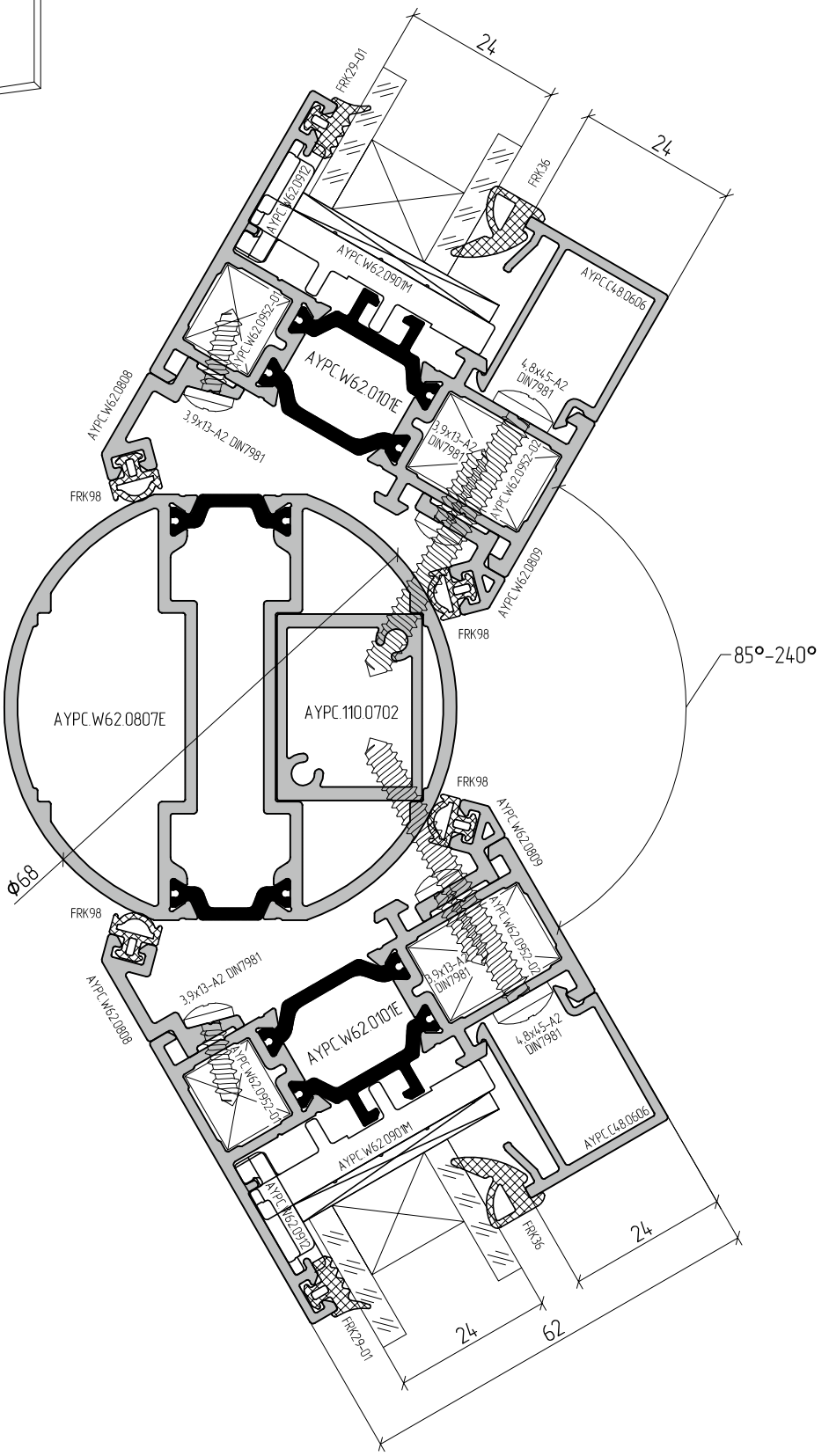
24
24
FRK29-01
FRK36
AYPC.W62.0912
AYPC.W62.0901M
AYPC.C48.0606
AYPC.W62.0952-01
AYPC.W62.0101E
4.8x45-A2 DIN7981
AYPC.W62.0808
3.9x13-A2 DIN7981
FRK98
AYPC.W62.0809
85°-240°
AYPC.W62.0807E
AYPC.110.0702
Φ68
24
62

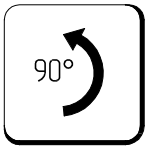
90°

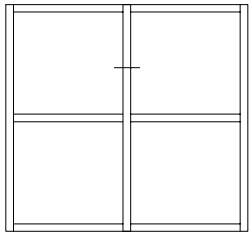

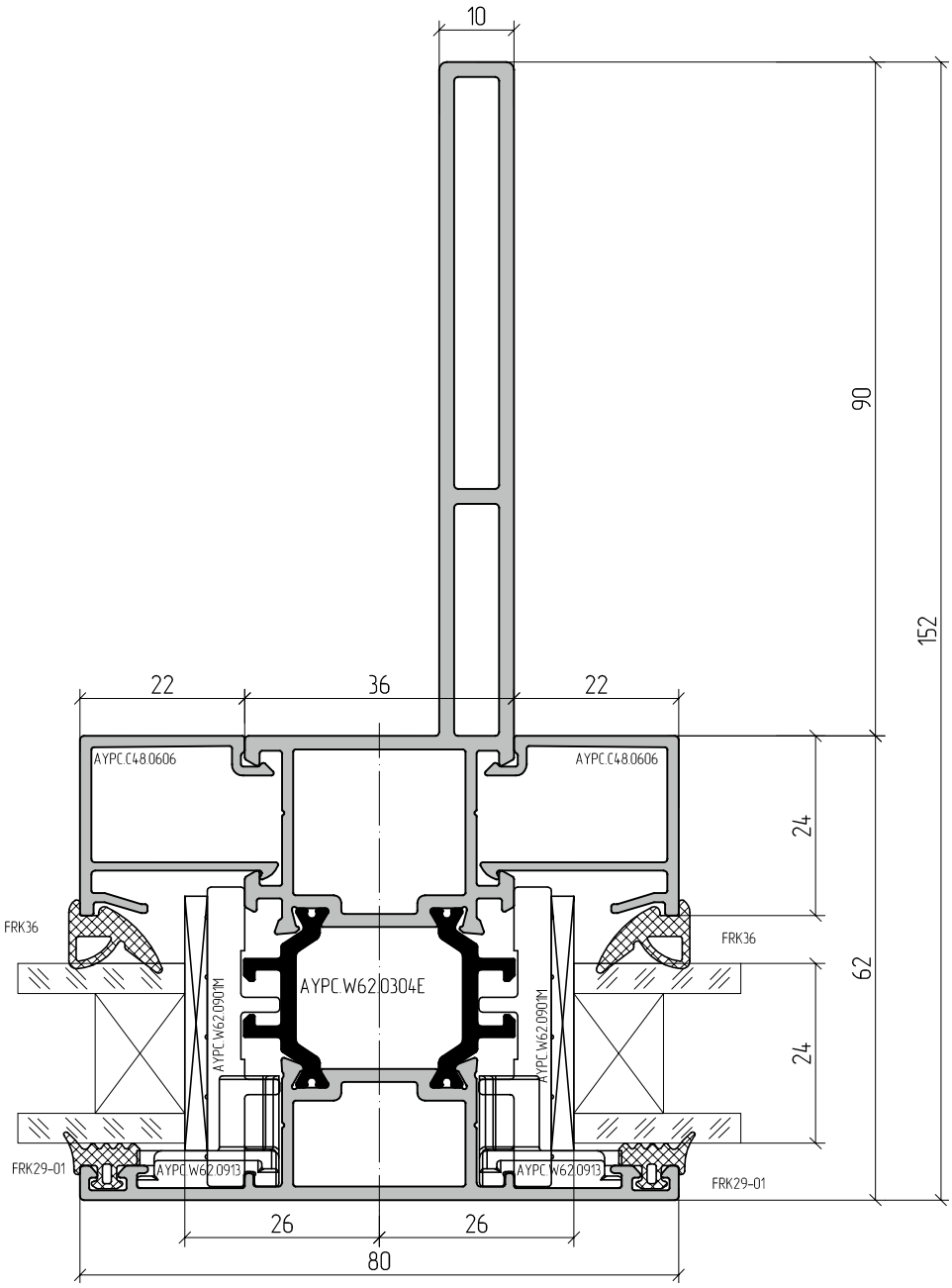
10
90
152
22
36
22
AYPC.C48.0606
AYPC.C48.0606
24
FRK36
FRK36
AYPC.W62.0304E
AYPC.W62.0901M
AYPC.W62.0901M
62
24
FRK29-01
AYPC.W62.0913
AYPC.W62.0913
FRK29-01
26
26
80

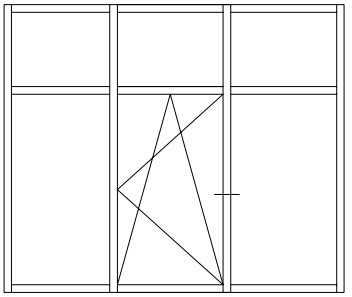

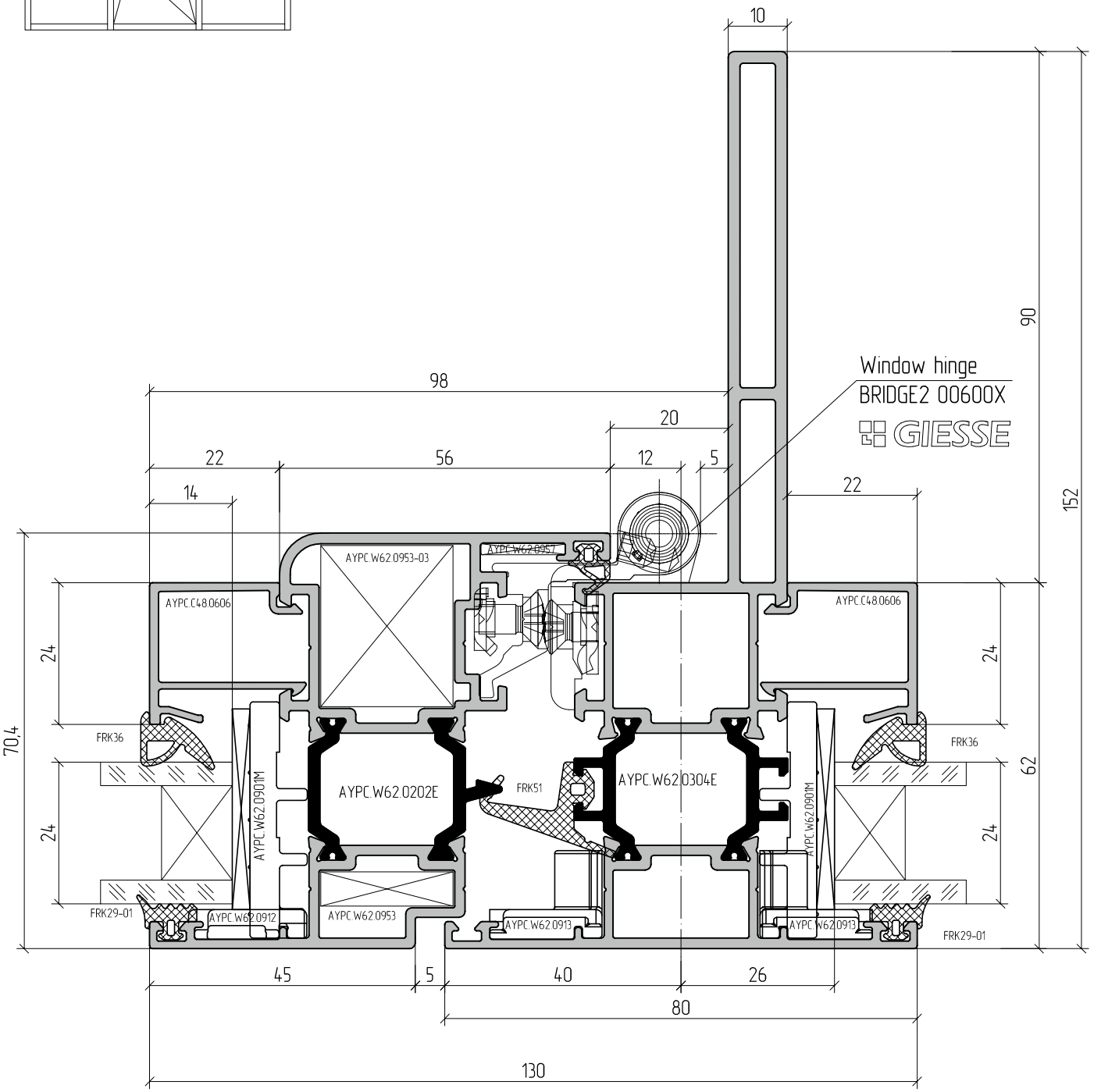
10
90
152
98
20
22
56
12
5
14
22
Window hinge
BRIDGE2 00600X
GIESSE
AYPC.W62.0953-03
AYPC.W62.0957
AYPC.C48.0606
AYPC.C48.0606
24
24
70,4
FRK36
FRK36
AYPC.W62.0901M
AYPC.W62.0202E
FRK51
AYPC.W62.0304E
AYPC.W62.0901M
62
24
24
FRK29-01
AYPC.W62.0912
AYPC.W62.0953
AYPC.W62.0913
AYPC.W62.0913
FRK29-01
45
5
40
26
80
130

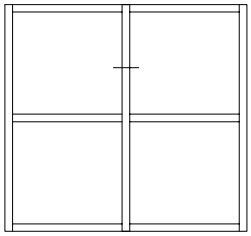

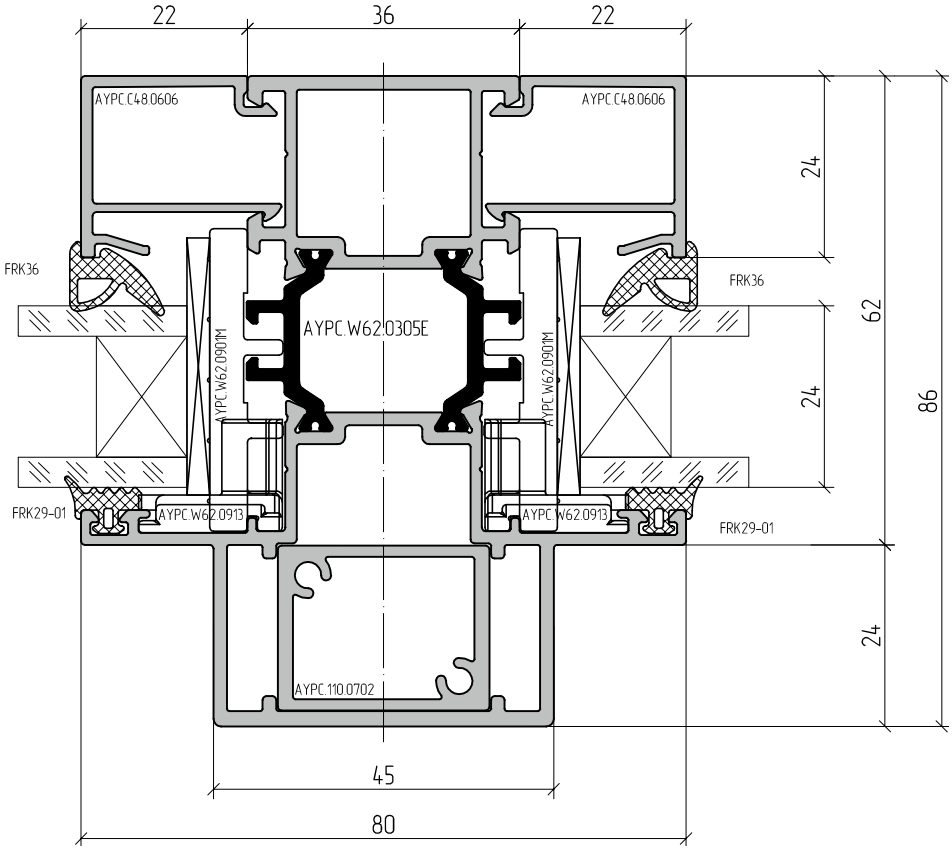
22
36
22
AYPC.C48.0606
AYPC.C48.0606
24
FRK36
FRK36
AYPC.W62.0305E
AYPC.W62.0901M
AYPC.W62.0901M
62
24
86
FRK29-01
AYPC.W62.0913
AYPC.W62.0913
FRK29-01
24
AYPC.110.0702
45
80

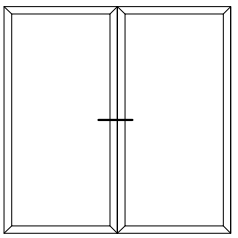

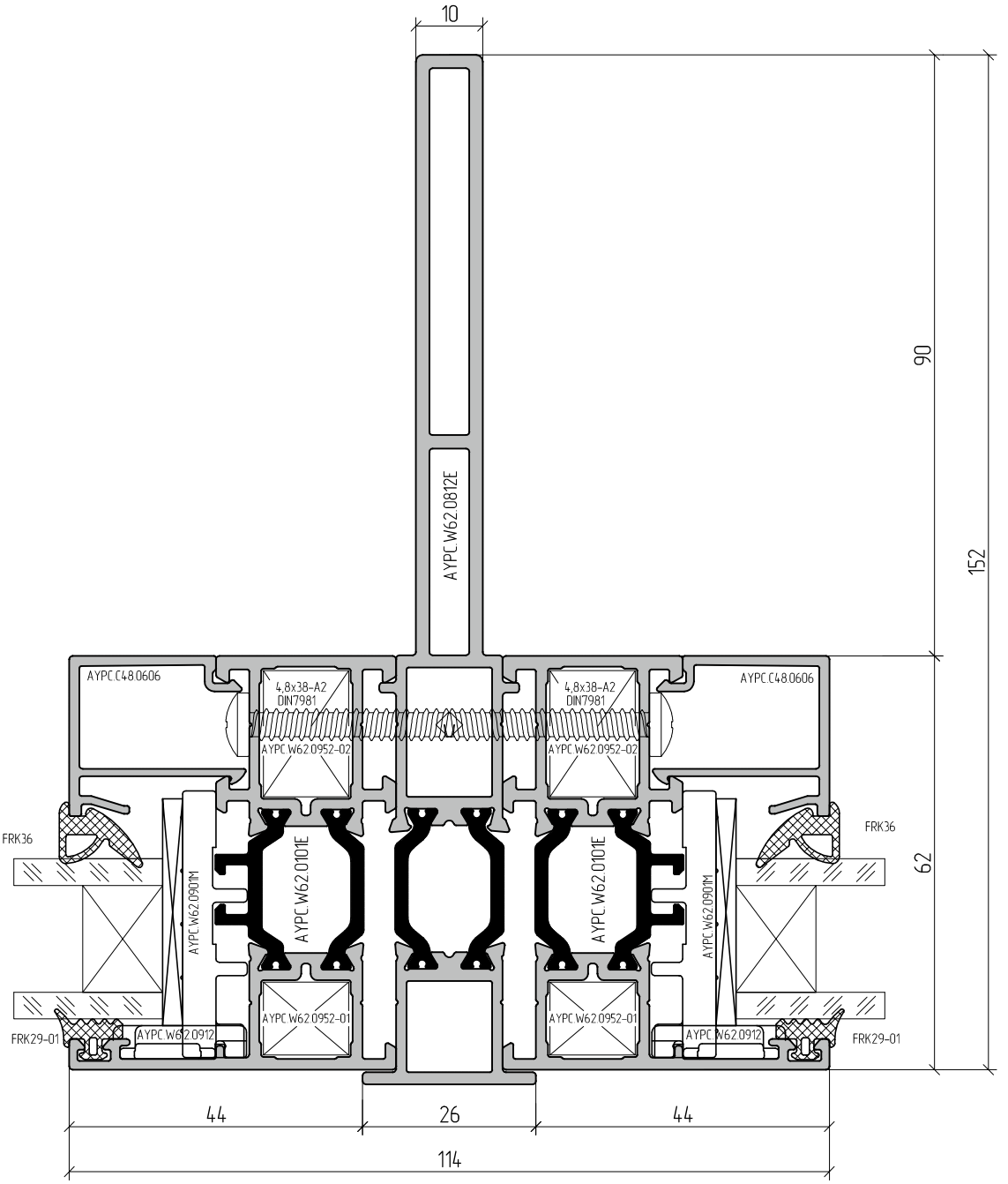
10
90
152
62
AYPC.W62.0812E
AYPC.C48.0606
4,8x38-A2
DIN7981
AYPC.W62.0952-02
AYPC.W62.0101E
AYPC.W62.0901M
AYPC.W62.0952-01
AYPC.W62.0912
FRK36
FRK29-01
44
26
44
114

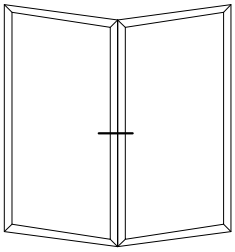

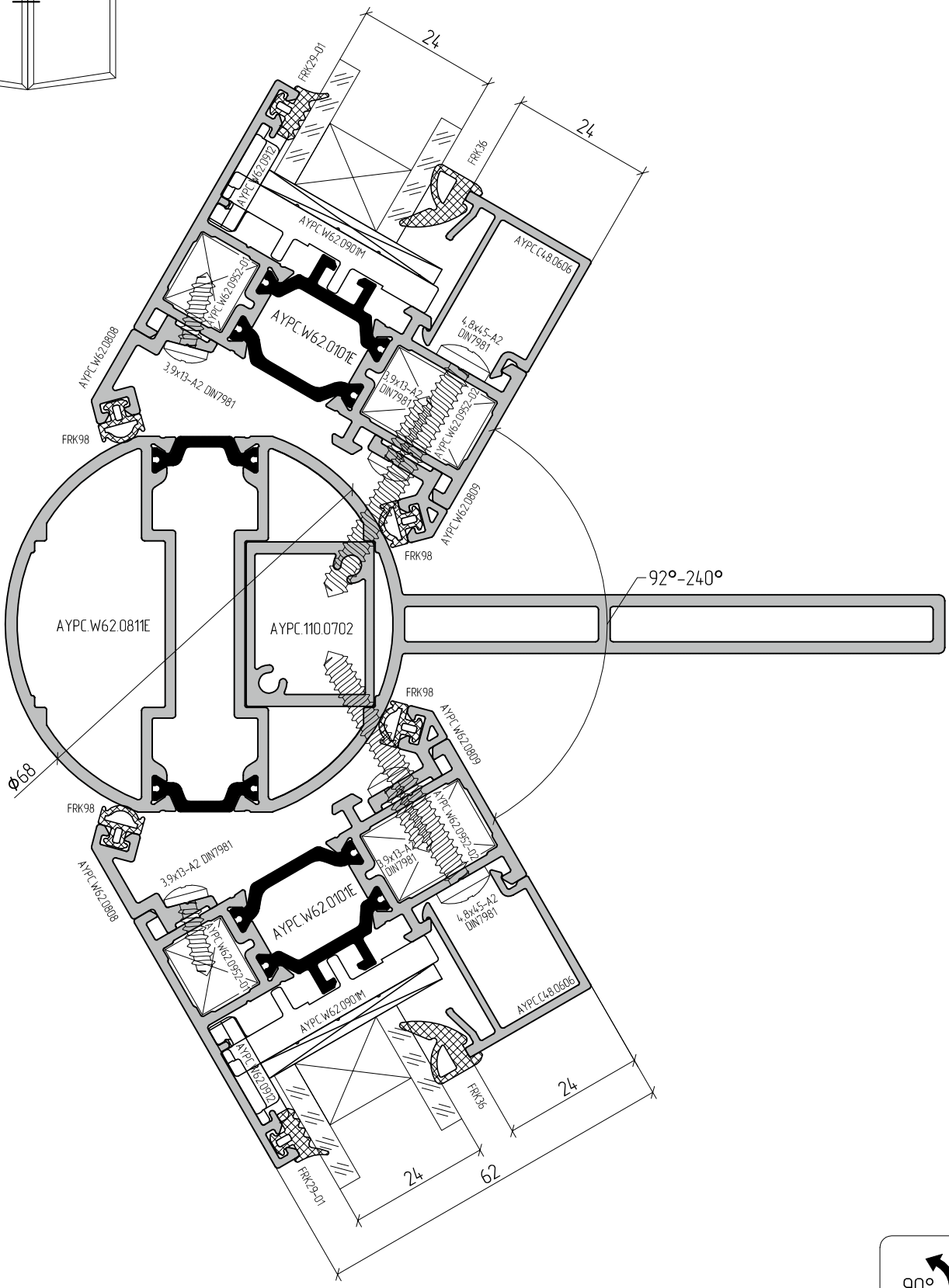
24
24
FRK29-01
FRK36
AYPC.W62.0912
AYPC.W62.0901M
AYPC.C48.0606
AYPC.W62.0952-01
AYPC.W62.0101E
4.8x45-A2 DIN7981
3.9x13-A2 DIN7981
AYPC.W62.0808
FRK98
AYPC.W62.0809
92°-240°
AYPC.W62.0811E
AYPC.110.0702
Φ68
62
90°

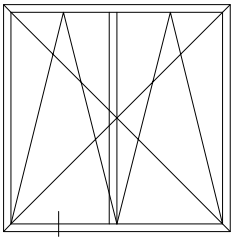

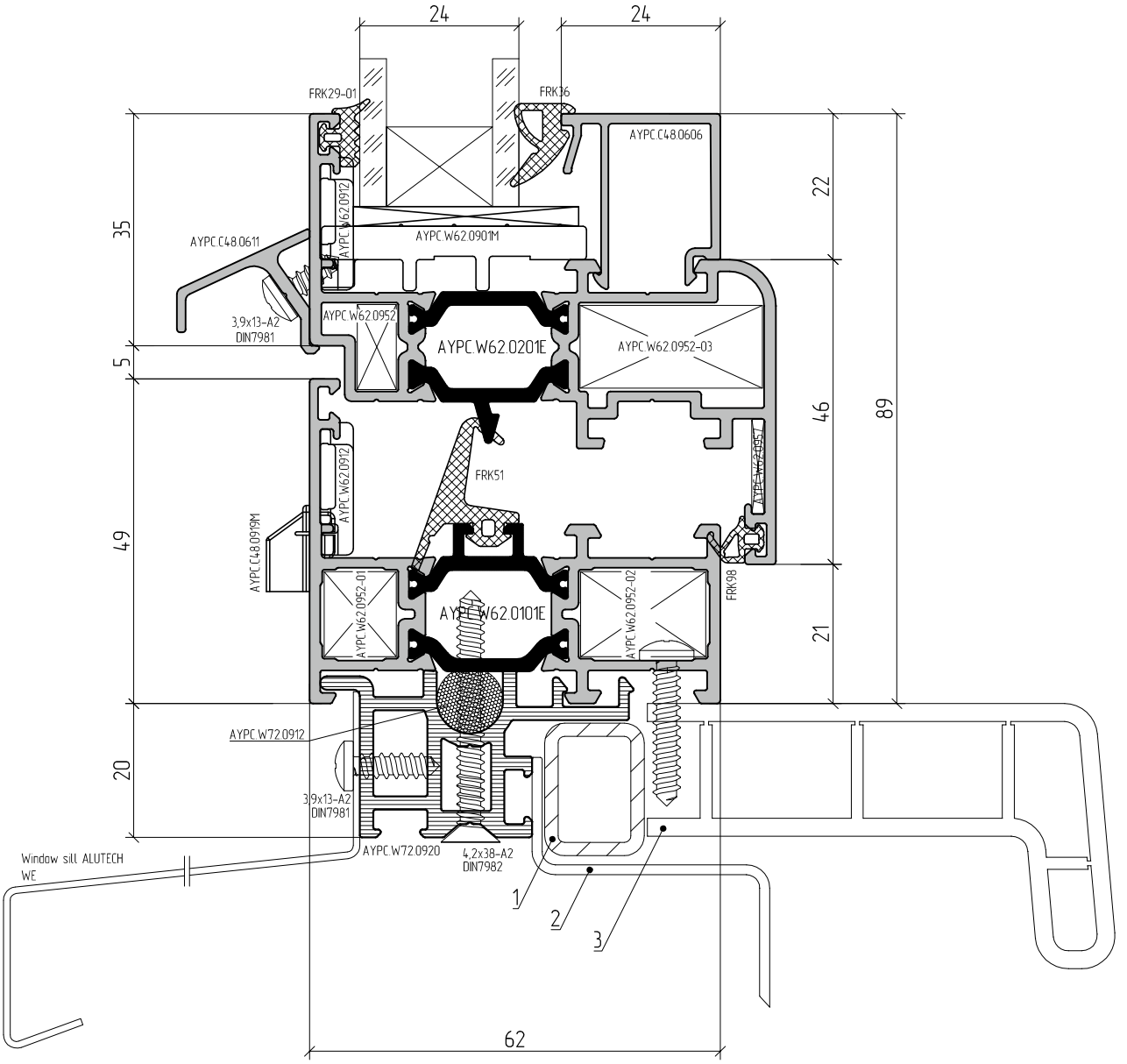

Items 1, 2 and 3 are not supplied by Alutech.

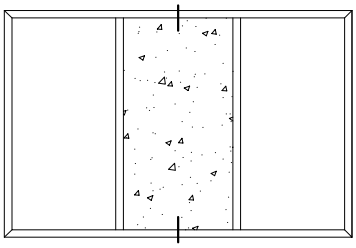

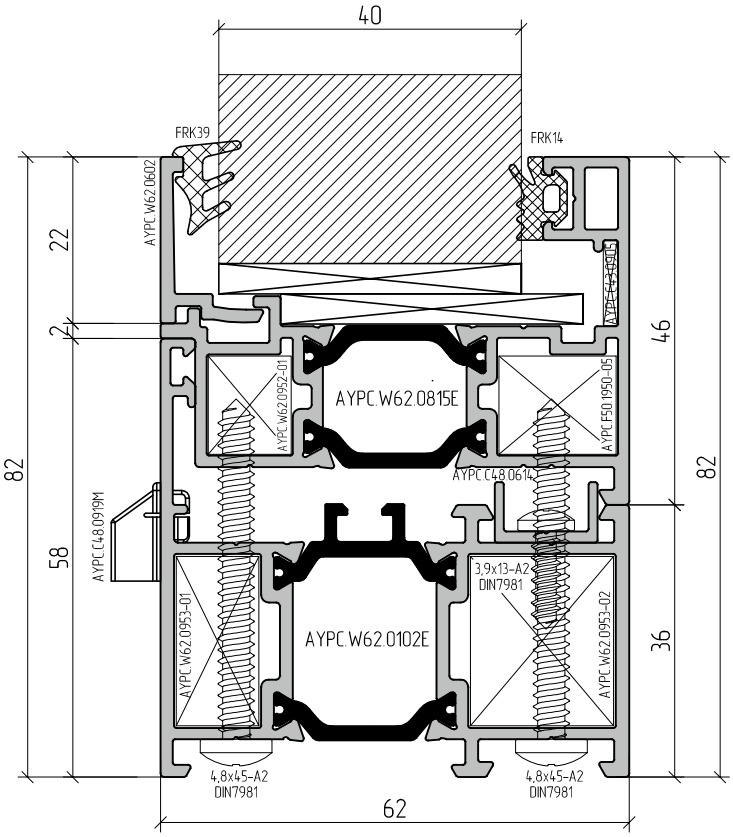
40
FRK39
FRK14
AYPC.W62.0602
AYPC.W62.0952-01
AYPC.W62.0815E
AYPC.F50.1950-05
AYPC.C48.0614
AYPC.C48.0919M
AYPC.W62.0953-01
AYPC.W62.0102E
3,9x13-A2
DIN7981
AYPC.W62.0953-02
4,8x45-A2
DIN7981
4,8x45-A2
DIN7981
22
2
82
58
46
82
36
62

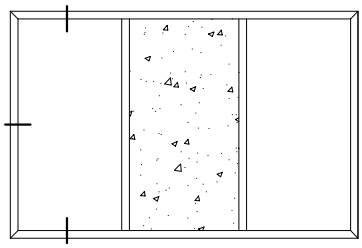

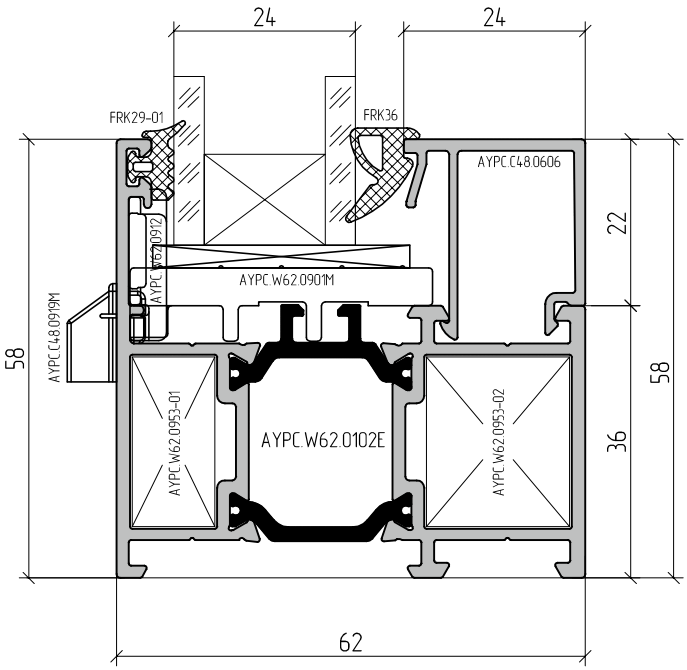
24
24
FRK29-01
FRK36
AYPC.C48.0606
AYPC.W62.0901M
AYPC.C48.0919M
AYPC.W62.0953-01
AYPC.W62.0102E
AYPC.W62.0953-02
22
58
58
36
62

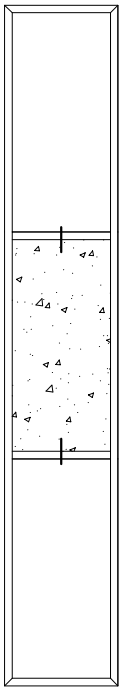

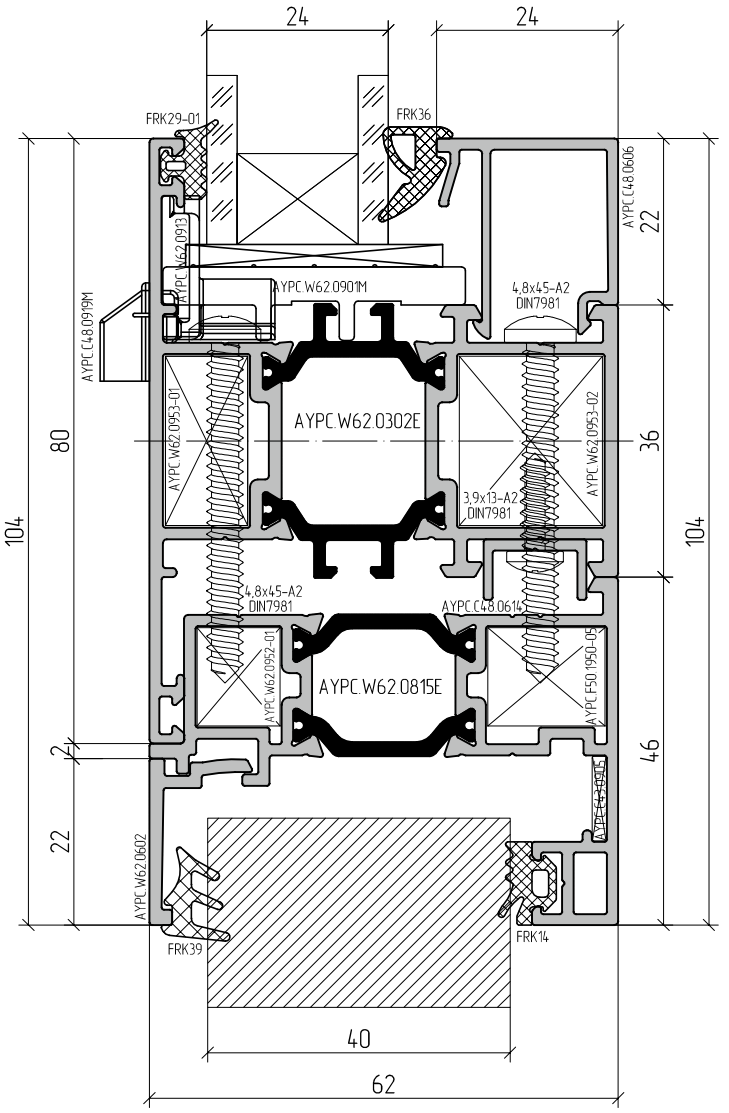
24
24
FRK29-01
FRK36
AYPC.C48.0606
22
AYPC.W62.0913
AYPC.W62.0901M
4,8x45-A2
DIN7981
AYPC.C48.0919M
AYPC.W62.0302E
AYPC.W62.0953-01
AYPC.W62.0953-02
80
36
104
104
3,9x13-A2
DIN7981
4,8x45-A2
DIN7981
AYPC.C48.0614
AYPC.W62.0952-01
AYPC.W62.0815E
AYPC.F50.1950-05
2
46
AYPC.E43.0905
22
AYPC.W62.0602
FRK39
FRK14
40
62

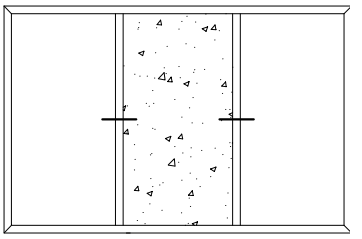

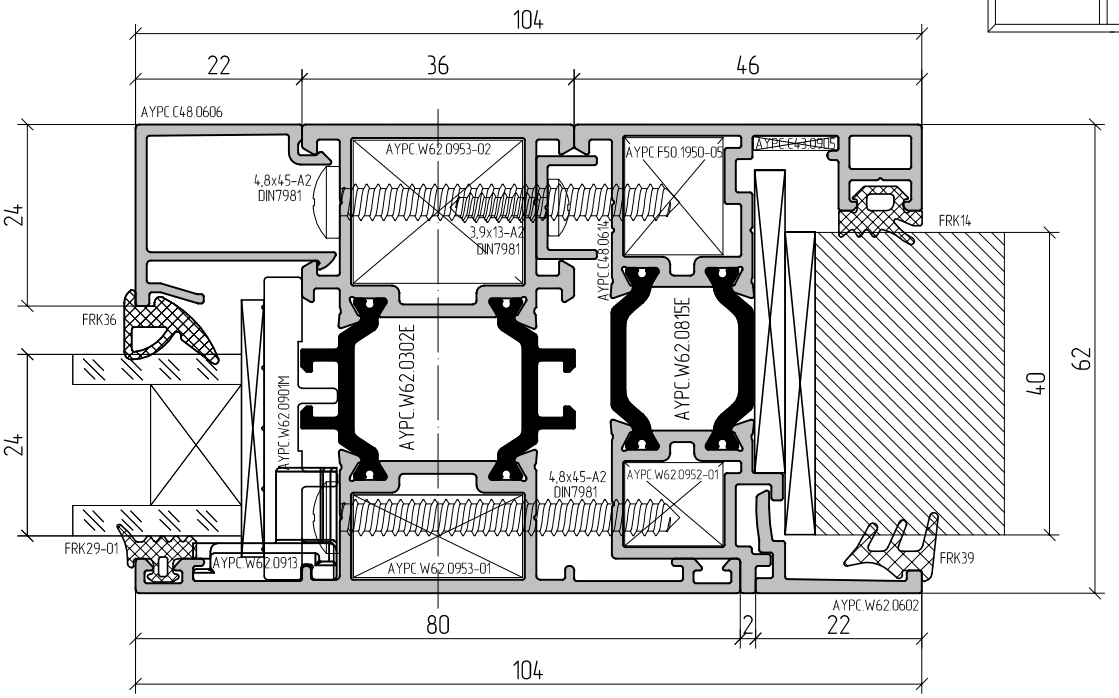
104
22
36
46
AYPC.C48.0606
AYPC.W62.0953-02
AYPC.F50.1950-05
AYPC.E43.0905
4,8x45-A2
DIN7981
3,9x13-A2
DIN7981
FRK14
24
AYPC.C48.0614
FRK36
AYPC.W62.0302E
AYPC.W62.0815E
AYPC.W62.0901M
40
62
24
4,8x45-A2
DIN7981
AYPC.W62.0952-01
FRK29-01
AYPC.W62.0913
AYPC.W62.0953-01
FRK39
AYPC.W62.0602
80
2
22
104

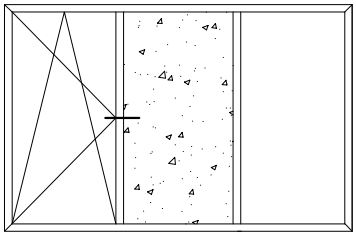

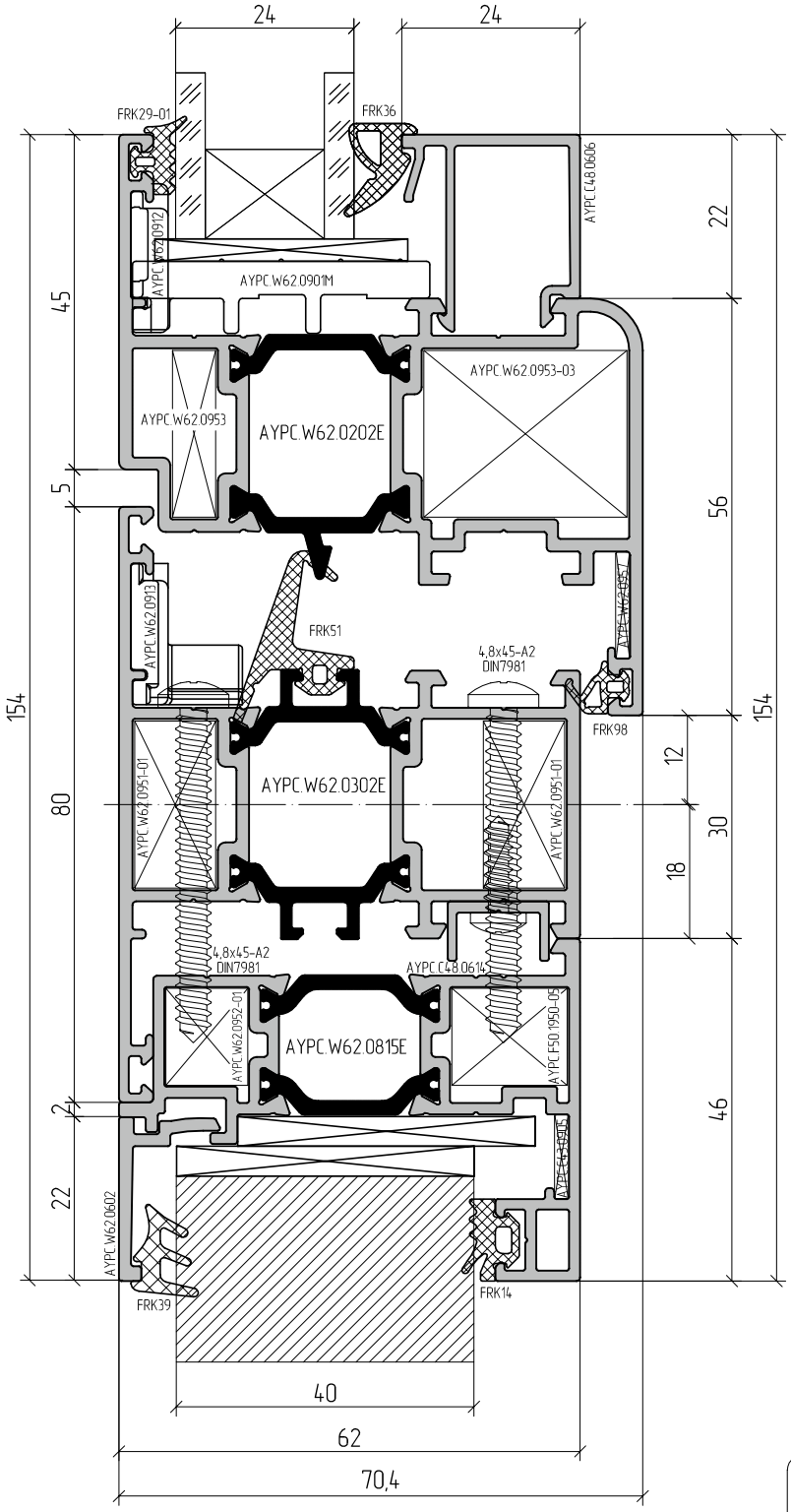
24
24
FRK29-01
FRK36
AYPC.C48.0606
AYPC.W62.0912
AYPC.W62.0901M
AYPC.W62.0953-03
AYPC.W62.0953
AYPC.W62.0202E
AYPC.W62.0913
FRK51
4,8x45-A2
DIN7981
FRK98
AYPC.W62.0951-01
AYPC.W62.0302E
AYPC.W62.0951-01
4,8x45-A2
DIN7981
AYPC.C48.0614
AYPC.W62.0952-01
AYPC.W62.0815E
AYPC.F50.1950-05
AYPC.W62.0602
FRK39
FRK14
45
5
80
2
22
154
22
56
154
12
30
18
46
40
62
70,4

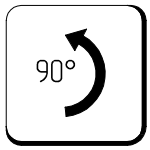
90°

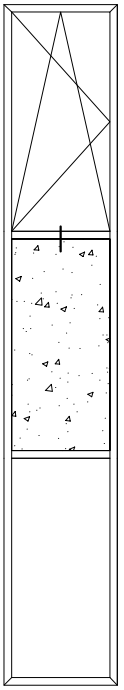

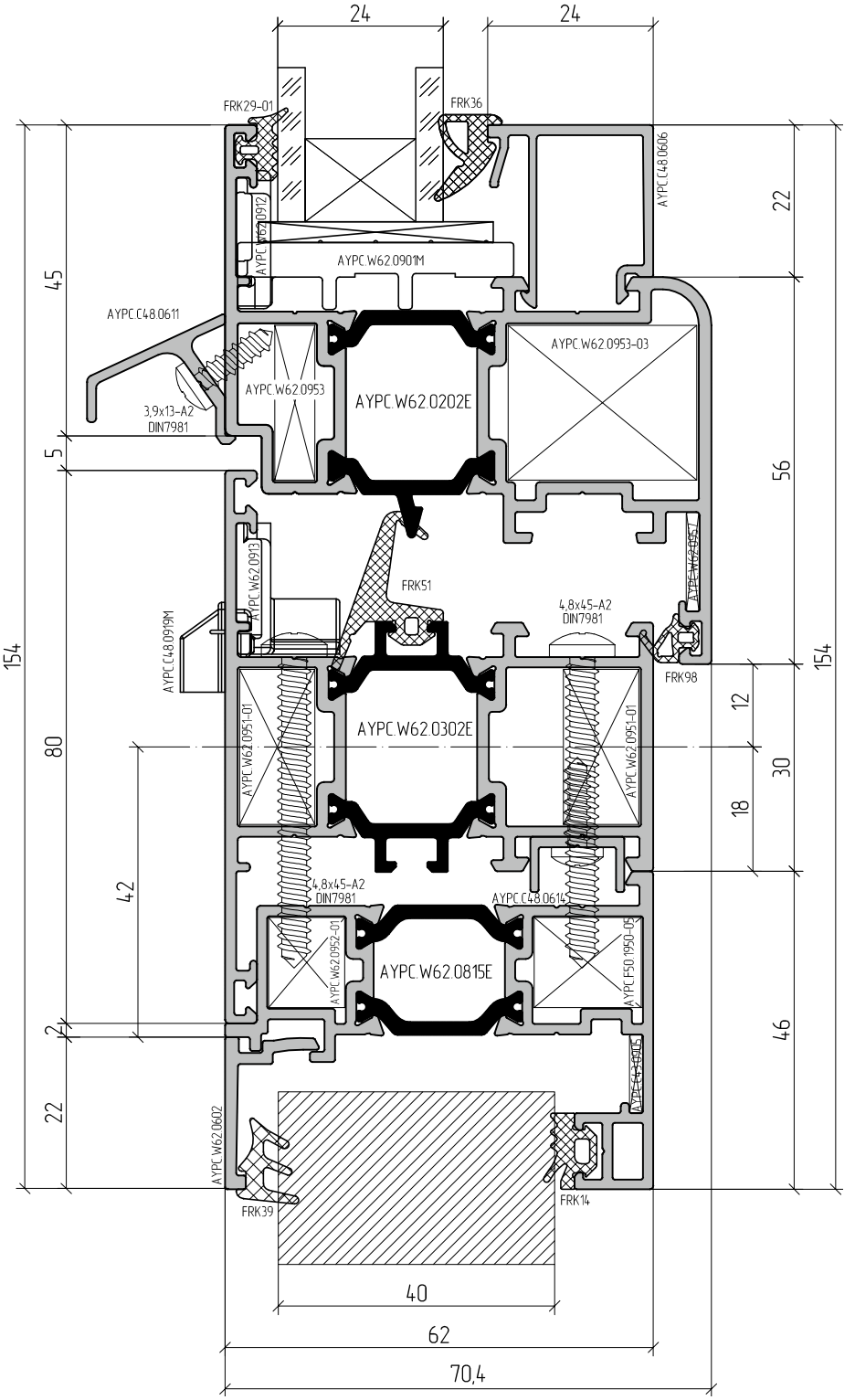
24
24
FRK29-01
FRK36
AYPC.C48.0606
AYPC.W62.0912
AYPC.W62.0901M
AYPC.C48.0611
AYPC.W62.0953-03
AYPC.W62.0953
AYPC.W62.0202E
3,9x13-A2
DIN7981
FRK51
AYPC.W62.0913
AYPC.C48.0999M
4,8x45-A2
DIN7981
FRK98
AYPC.W62.0302E
AYPC.W62.0951-01
AYPC.W62.0951-01
4,8x45-A2
DIN7981
AYPC.C48.0614
AYPC.W62.0952-01
AYPC.W62.0815E
AYPC.F50.1950-05
AYPC.W62.0602
FRK39
FRK14
45
5
80
42
2
22
154
22
56
154
12
30
18
46
40
62
70,4

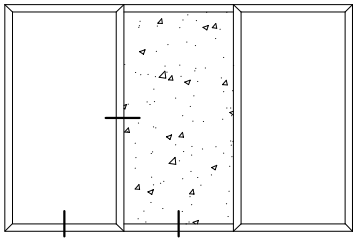

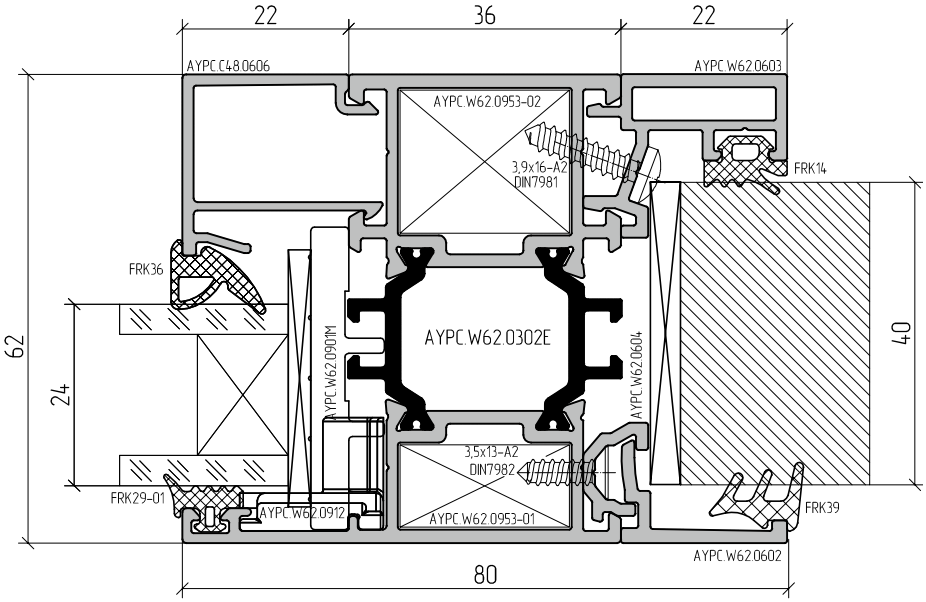
22
36
22
AYPC.C48.0606
AYPC.W62.0603
AYPC.W62.0953-02
3,9x16-A2
DIN7981
FRK14
FRK36
AYPC.W62.0901M
AYPC.W62.0302E
AYPC.W62.0604
62
24
40
3,5x13-A2
DIN7982
FRK29-01
AYPC.W62.0912
AYPC.W62.0953-01
FRK39
AYPC.W62.0602
80

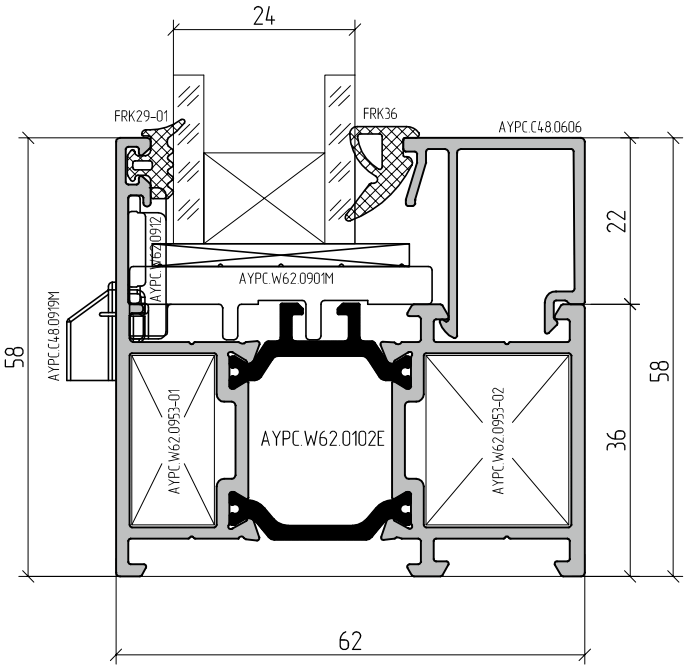
24
FRK29-01
FRK36
AYPC.C48.0606
22
AYPC.W62.0912
AYPC.W62.0901M
AYPC.C48.0919M
58
58
AYPC.W62.0953-01
AYPC.W62.0102E
AYPC.W62.0953-02
36
62

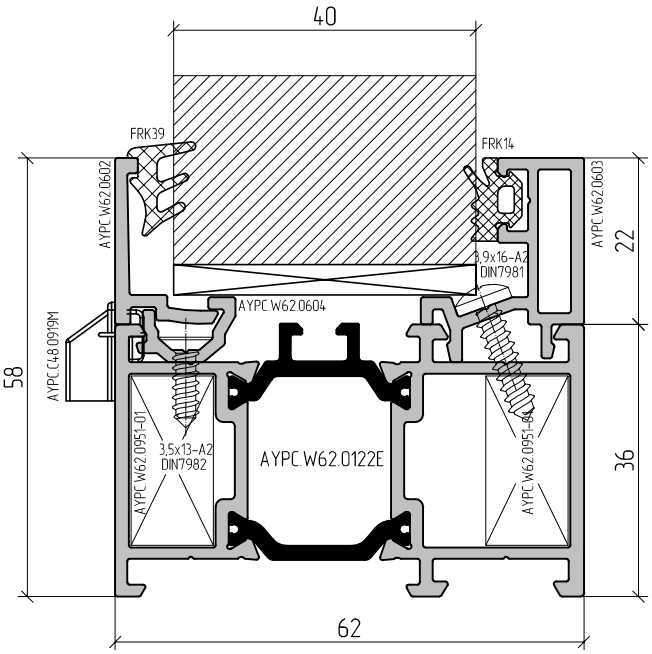
40
FRK39
FRK14
AYPC.W62.0602
AYPC.W62.0603
22
3,9x16-A2
DIN7981
AYPC.W62.0604
AYPC.C48.0919M
58
AYPC.W62.0951-01
3,5x13-A2
DIN7982
AYPC.W62.0122E
AYPC.W62.0951-04
36
62

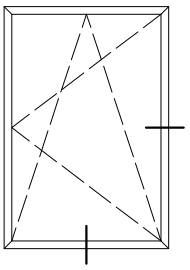

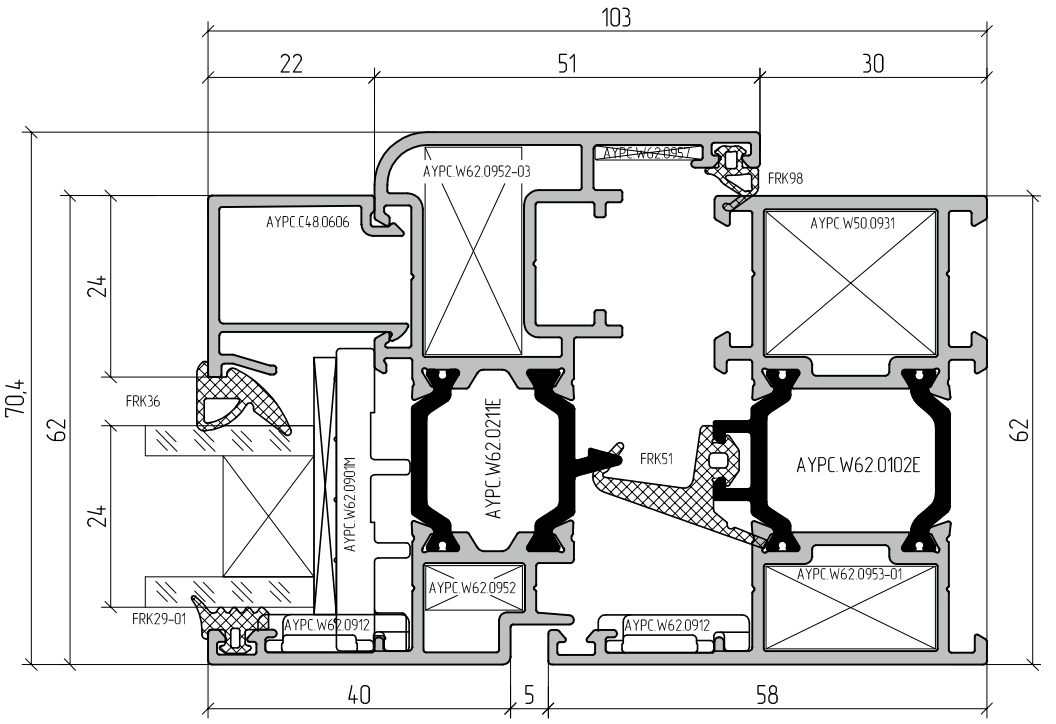
103
22
51
30
AYPC.W62.0952-03
AYPC.W62.0957
FRK98
AYPC.C48.0606
AYPC.W50.0931
24
70,4
62
FRK36
AYPC.W62.0211E
FRK51
AYPC.W62.0102E
AYPC.W62.0901M
AYPC.W62.0952
AYPC.W62.0953-01
FRK29-01
AYPC.W62.0912
AYPC.W62.0912
40
5
58

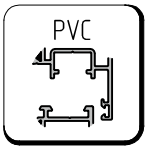
PVC

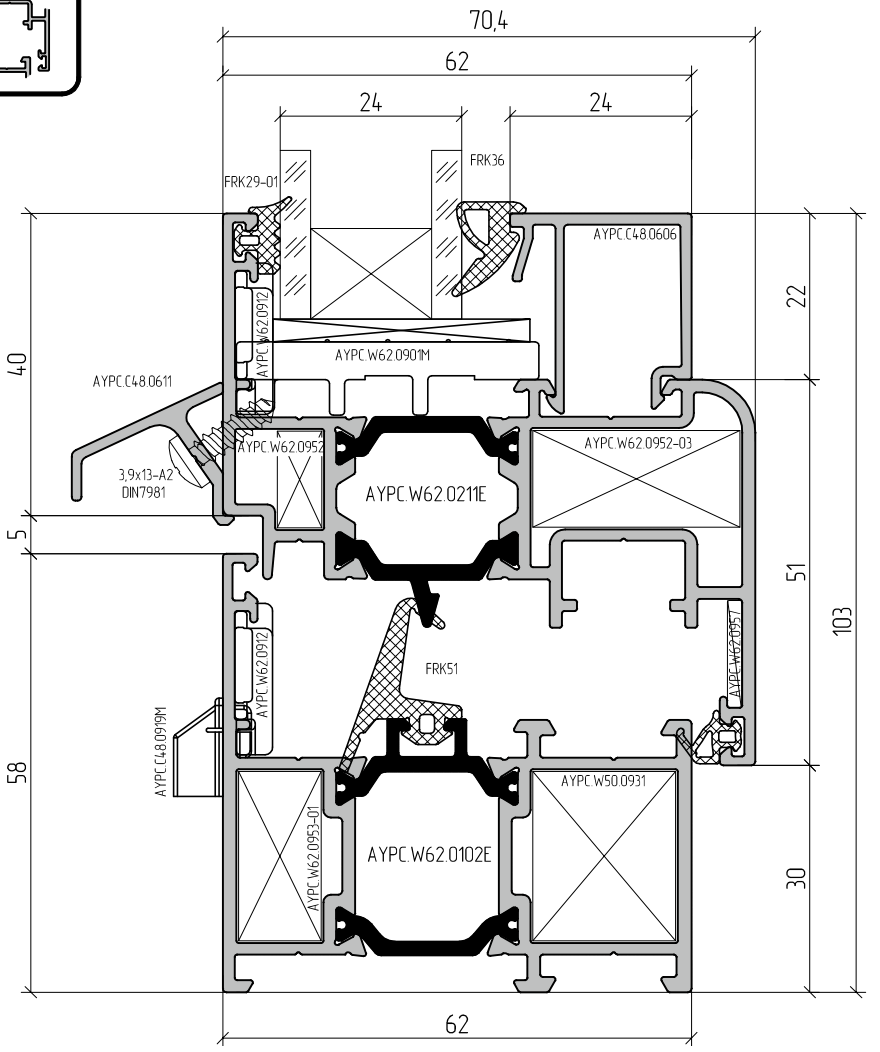
70,4
62
24
24
FRK29-01
FRK36
AYPC.C48.0606
22
AYPC.W62.0912
AYPC.W62.0901M
40
AYPC.C48.0611
AYPC.W62.0952
AYPC.W62.0952-03
3,9x13-A2
DIN7981
AYPC.W62.0211E
5
51
103
AYPC.W62.0912
FRK51
AYPC.W62.0957
AYPC.C48.0919M
58
AYPC.W50.0931
AYPC.W62.0953-01
AYPC.W62.0102E
30
62

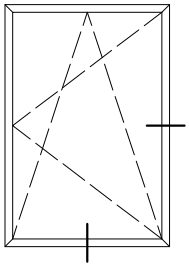

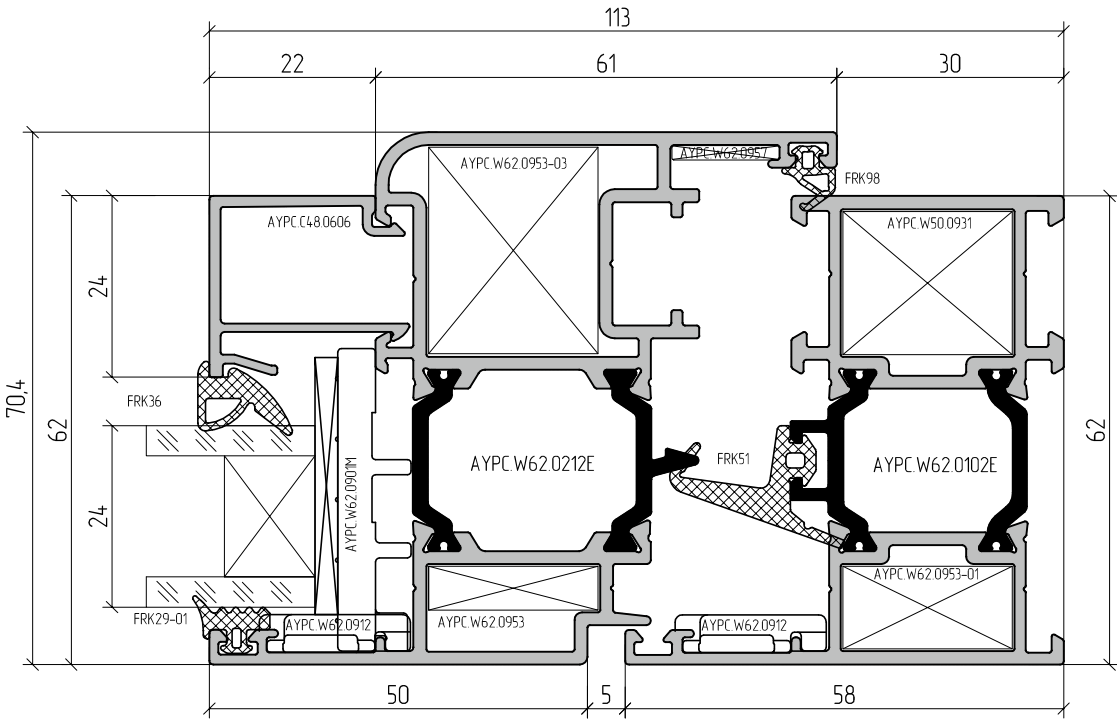
113
22
61
30
AYPC.W62.0953-03
AYPC.W62.0957
FRK98
AYPC.C48.0606
AYPC.W50.0931
24
70,4
62
FRK36
AYPC.W62.0901M
AYPC.W62.0212E
FRK51
AYPC.W62.0102E
62
24
AYPC.W62.0953-01
FRK29-01
AYPC.W62.0912
AYPC.W62.0953
AYPC.W62.0912
50
5
58

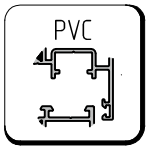
PVC

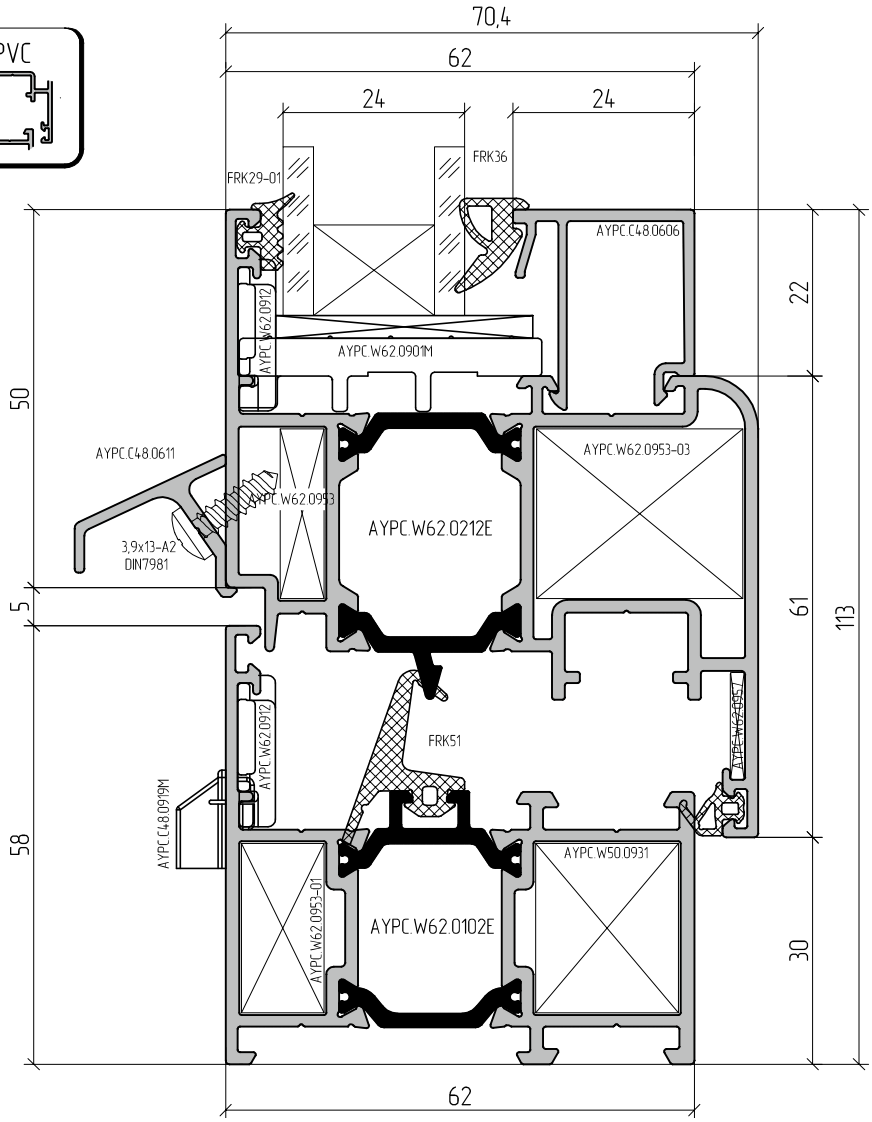
70,4
62
24
24
FRK36
FRK29-01
AYPC.C48.0606
AYPC.W62.0912
AYPC.W62.0901M
22
50
AYPC.C48.0611
AYPC.W62.0953
AYPC.W62.0953-03
AYPC.W62.0212E
3,9x13-A2
DIN7981
5
61
113
AYPC.W62.0912
FRK51
AYPC.W62.0957
AYPC.C48.0919M
58
AYPC.W50.0931
AYPC.W62.0953-01
AYPC.W62.0102E
30
62

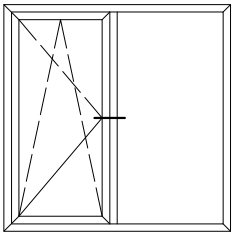

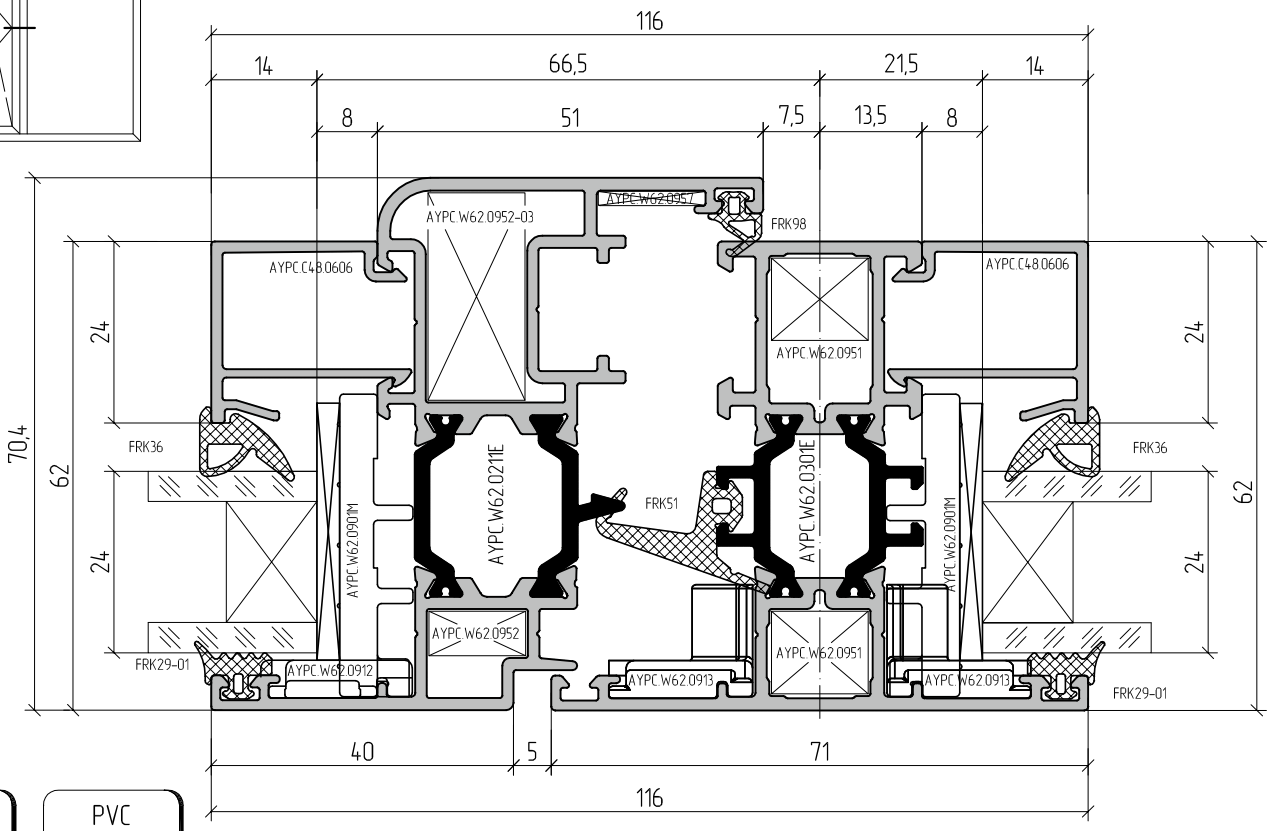
116
14
66,5
21,5
14
8
51
7,5
13,5
8
AYPC.W62.0952-03
AYPC.W62.0957
FRK98
AYPC.C48.0606
AYPC.C48.0606
AYPC.W62.0951
24
24
70,4
62
FRK36
FRK36
AYPC.W62.0211E
AYPC.W62.0301E
FRK51
AYPC.W62.0901M
AYPC.W62.0901M
62
24
24
AYPC.W62.0952
AYPC.W62.0951
FRK29-01
AYPC.W62.0912
AYPC.W62.0913
AYPC.W62.0913
FRK29-01
40
5
71
116

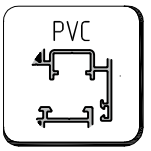
PVC

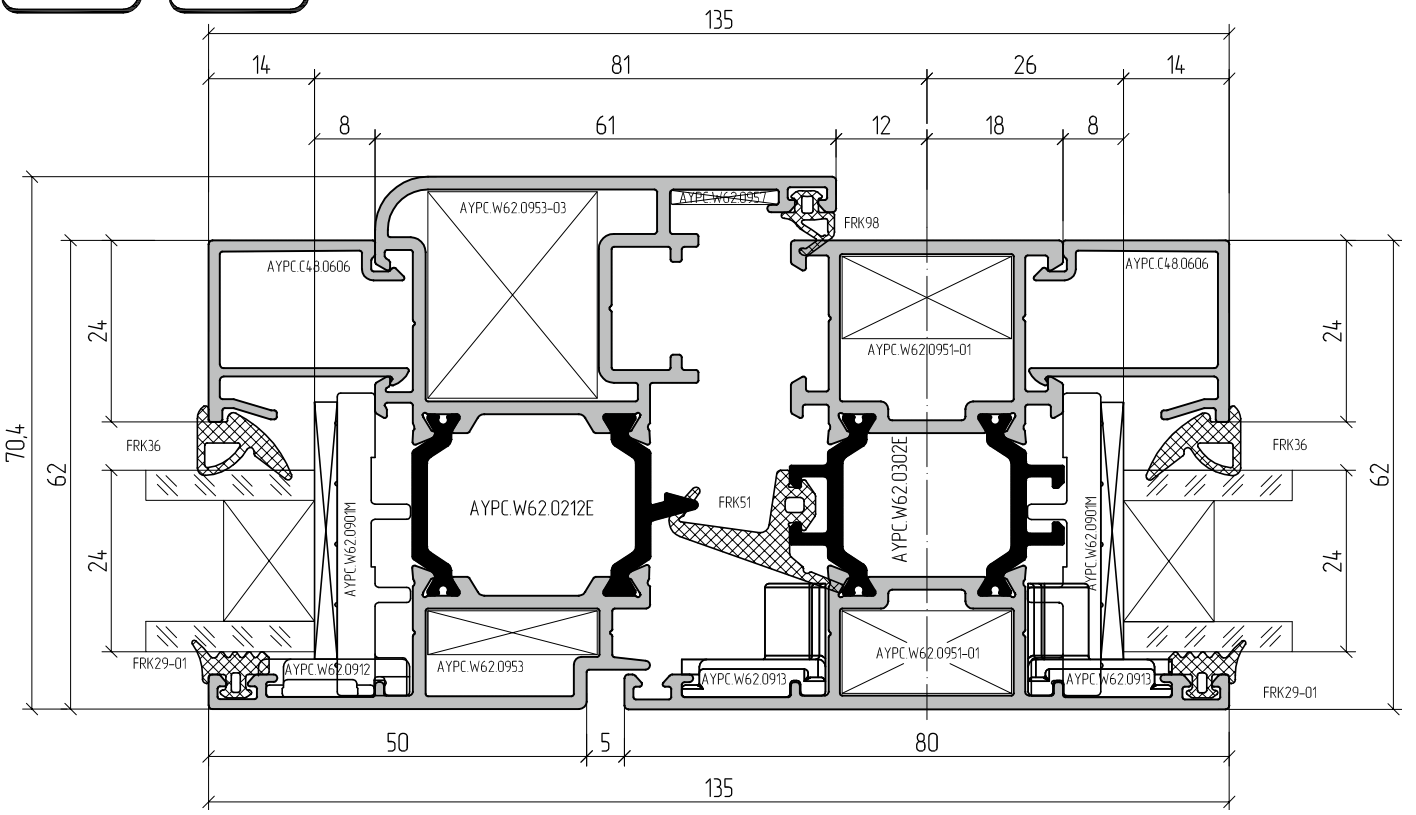
135
14
81
26
14
8
61
12
18
8
AYPC.W62.0953-03
AYPC.W62.0957
FRK98
AYPC.C48.0606
AYPC.C48.0606
AYPC.W62|0951-01
24
24
70,4
62
FRK36
FRK36
AYPC.W62.0212E
FRK51
AYPC.W62.0302E
AYPC.W62.0901M
AYPC.W62.0901M
62
24
24
AYPC.W62.0953
AYPC.W62.0951-01
FRK29-01
AYPC.W62.0912
AYPC.W62.0913
AYPC.W62.0913
FRK29-01
50
5
80
135

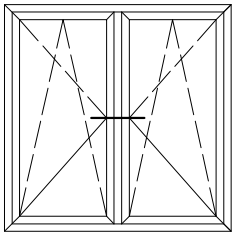

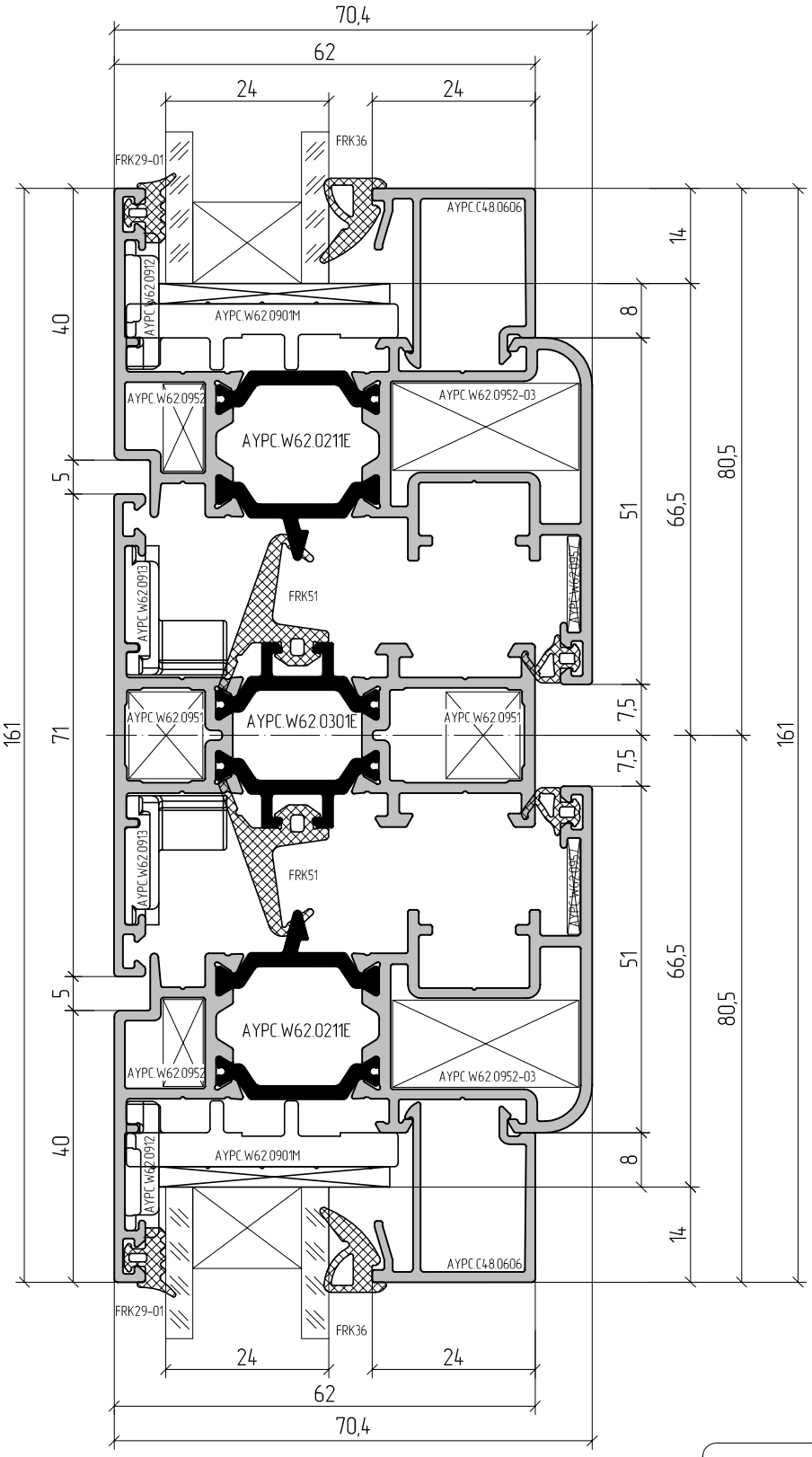

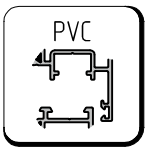

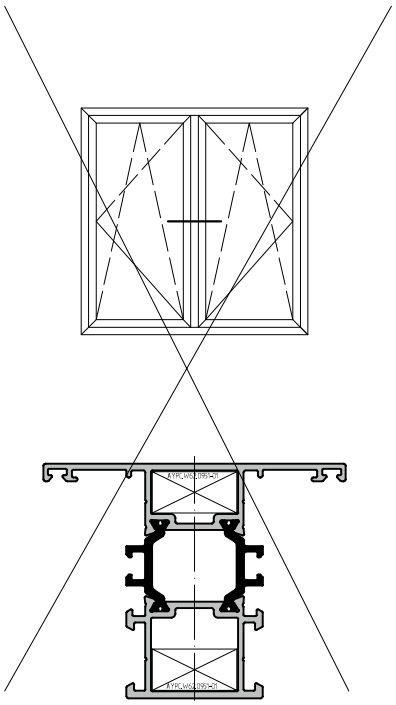

AYPC.W62.0301E
AYPC.W62.0302E
AYPC.W62.0303E

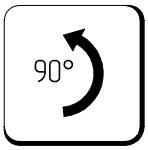

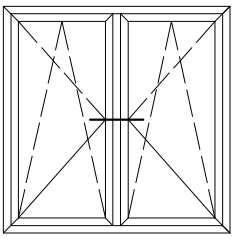

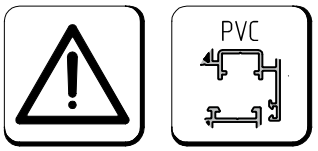

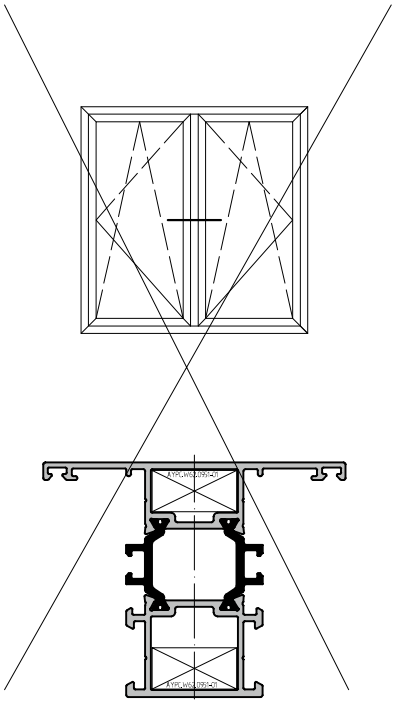

AYPC.W62.0301E
AYPC.W62.0302E
AYPC.W62.0303E

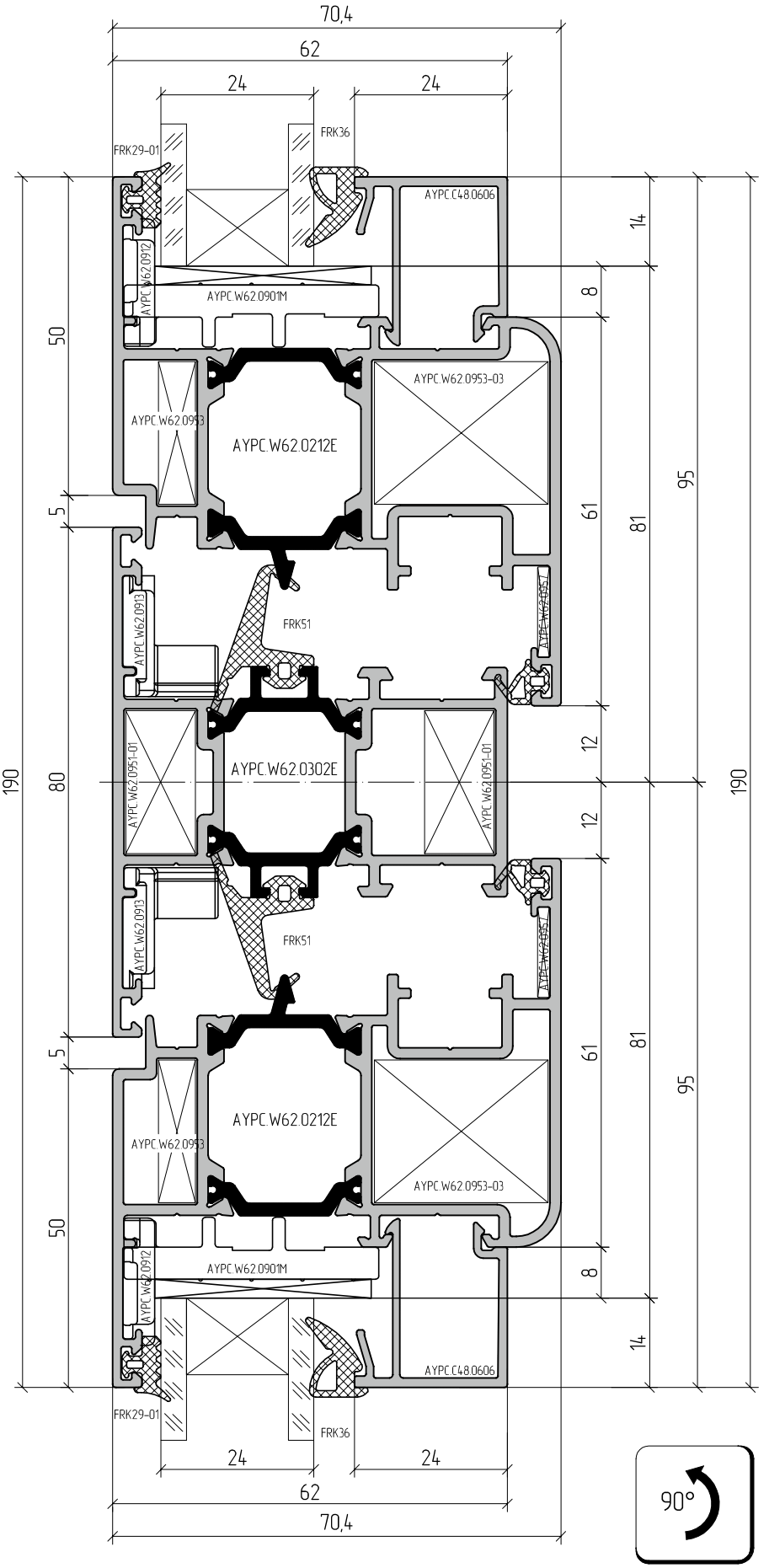

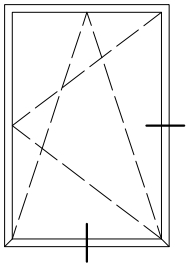

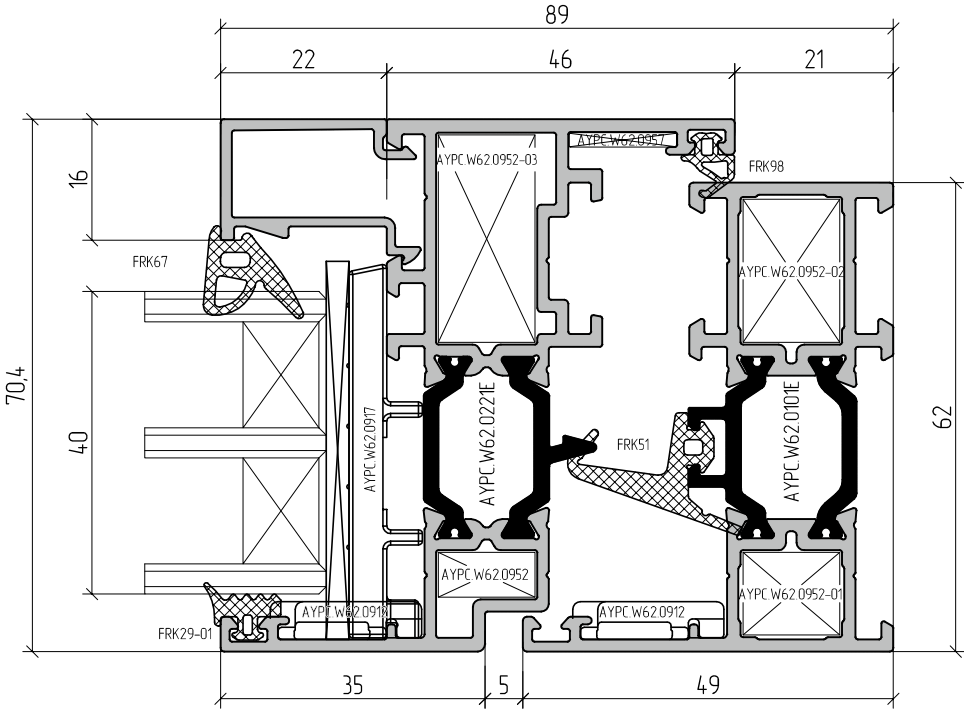
89
22
46
21
16
70,4
40
62
35
5
49
AYPC.W62.0952-03
AYPC.W62.0957
FRK98
FRK67
AYPC.W62.0952-02
AYPC.W62.0917
AYPC.W62.0221E
FRK51
AYPC.W62.0101E
AYPC.W62.0952
AYPC.W62.0952-01
AYPC.W62.0918
AYPC.W62.0912
FRK29-01

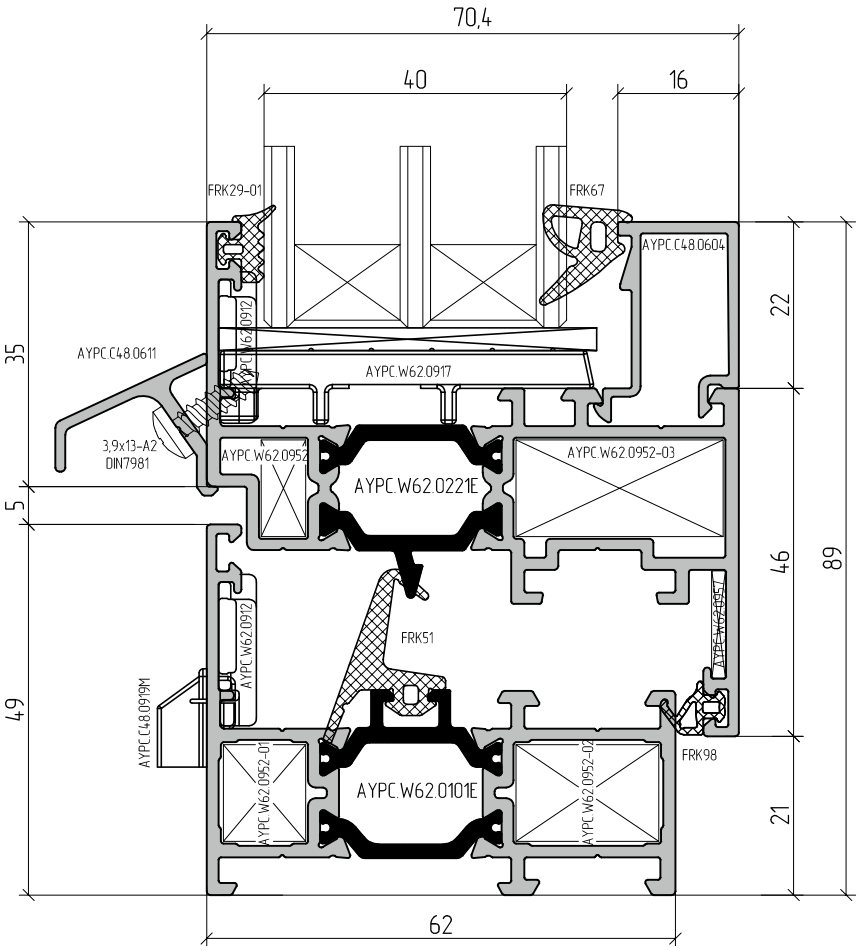
70,4
40
16
FRK29-01
FRK67
AYPC.C48.0604
22
35
AYPC.C48.0611
AYPC.W62.0912
AYPC.W62.0917
3,9x13-A2
DIN7981
AYPC.W62.0952
AYPC.W62.0221E
AYPC.W62.0952-03
5
46
89
FRK51
AYPC.W62.0957
AYPC.W62.0912
49
AYPC.C48.0919M
FRK98
AYPC.W62.0952-01
AYPC.W62.0101E
AYPC.W62.0952-02
21
62

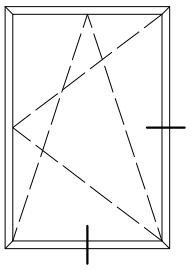

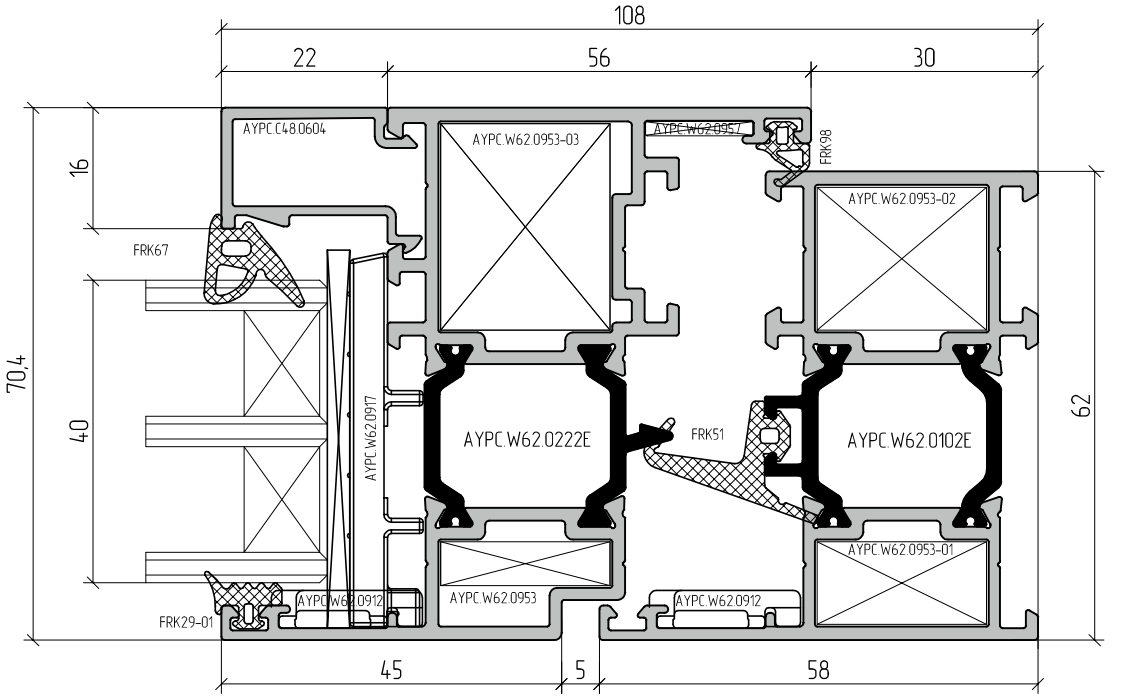
108
22
56
30
16
70,4
40
62
AYPC.C48.0604
AYPC.W62.0953-03
AYPC.W62.0957
FRK98
AYPC.W62.0953-02
FRK67
AYPC.W62.0917
AYPC.W62.0222E
FRK51
AYPC.W62.0102E
AYPC.W62.0953-01
AYPC.W62.0912
AYPC.W62.0953
AYPC.W62.0912
FRK29-01
45
5
58

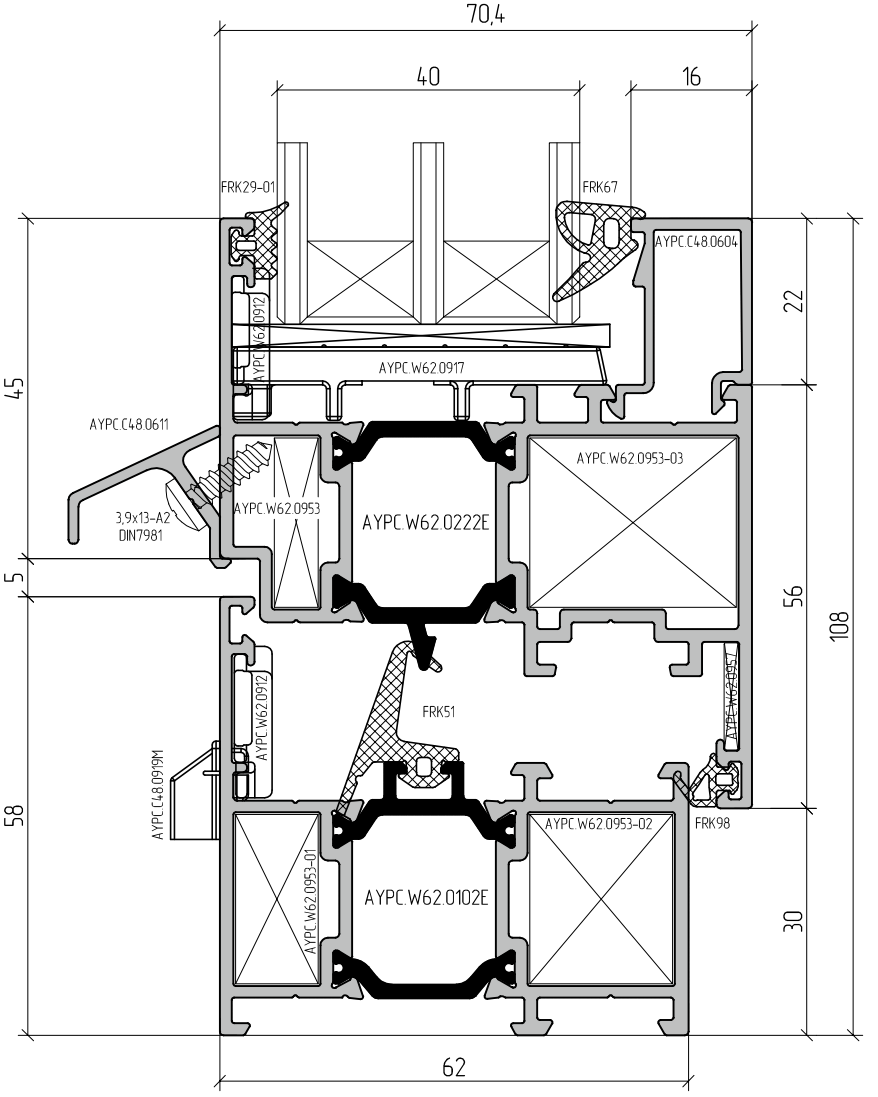
70,4
40
16
FRK29-01
FRK67
AYPC.C48.0604
22
AYPC.W62.0912
AYPC.W62.0917
45
AYPC.C48.0611
AYPC.W62.0953-03
3,9x13-A2
DIN7981
AYPC.W62.0953
AYPC.W62.0222E
5
56
108
AYPC.W62.0912
FRK51
AYPC.W62.0957
AYPC.C48.0919M
58
AYPC.W62.0953-02
FRK98
AYPC.W62.0953-01
AYPC.W62.0102E
30
62

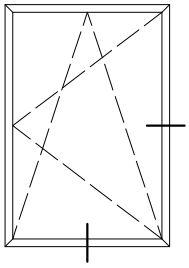

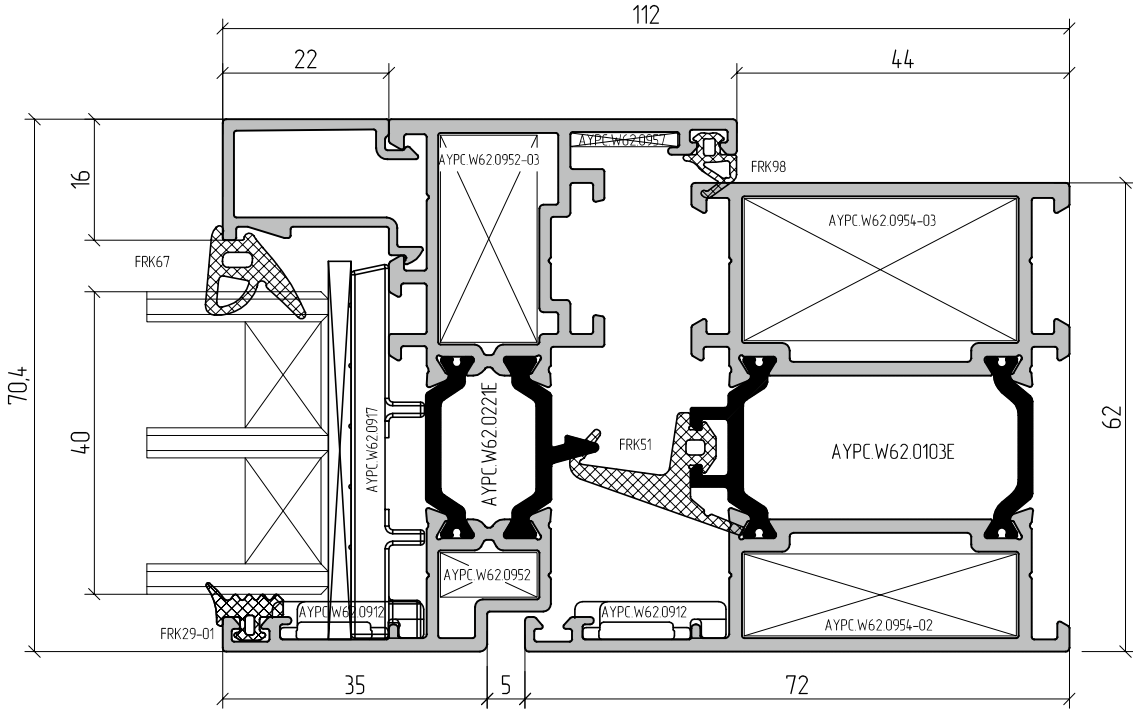
112
22
44
16
70,4
40
62
35
5
72
FRK67
FRK29-01
FRK98
FRK51
AYPC.W62.0952-03
AYPC.W62.0957
AYPC.W62.0954-03
AYPC.W62.0917
AYPC.W62.0221E
AYPC.W62.0103E
AYPC.W62.0952
AYPC.W62.0912
AYPC.W62.0954-02

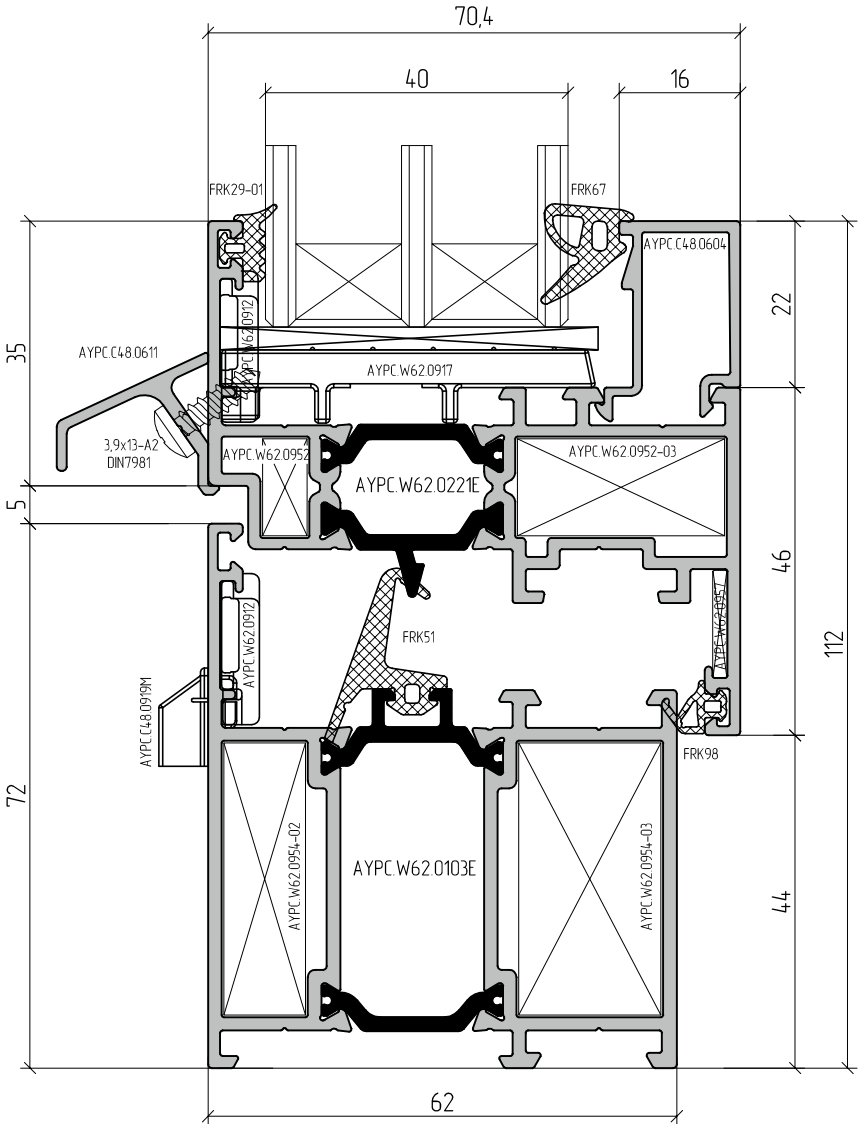
70,4
40
16
FRK29-01
FRK67
AYPC.C48.0604
AYPC.C48.0611
AYPC.W62.0912
AYPC.W62.0917
3,9x13-A2
DIN7981
AYPC.W62.0952
AYPC.W62.0221E
AYPC.W62.0952-03
FRK51
AYPC.W62.0957
AYPC.C48.0919M
FRK98
AYPC.W62.0954-02
AYPC.W62.0103E
AYPC.W62.0954-03
35
5
72
22
46
112
44
62

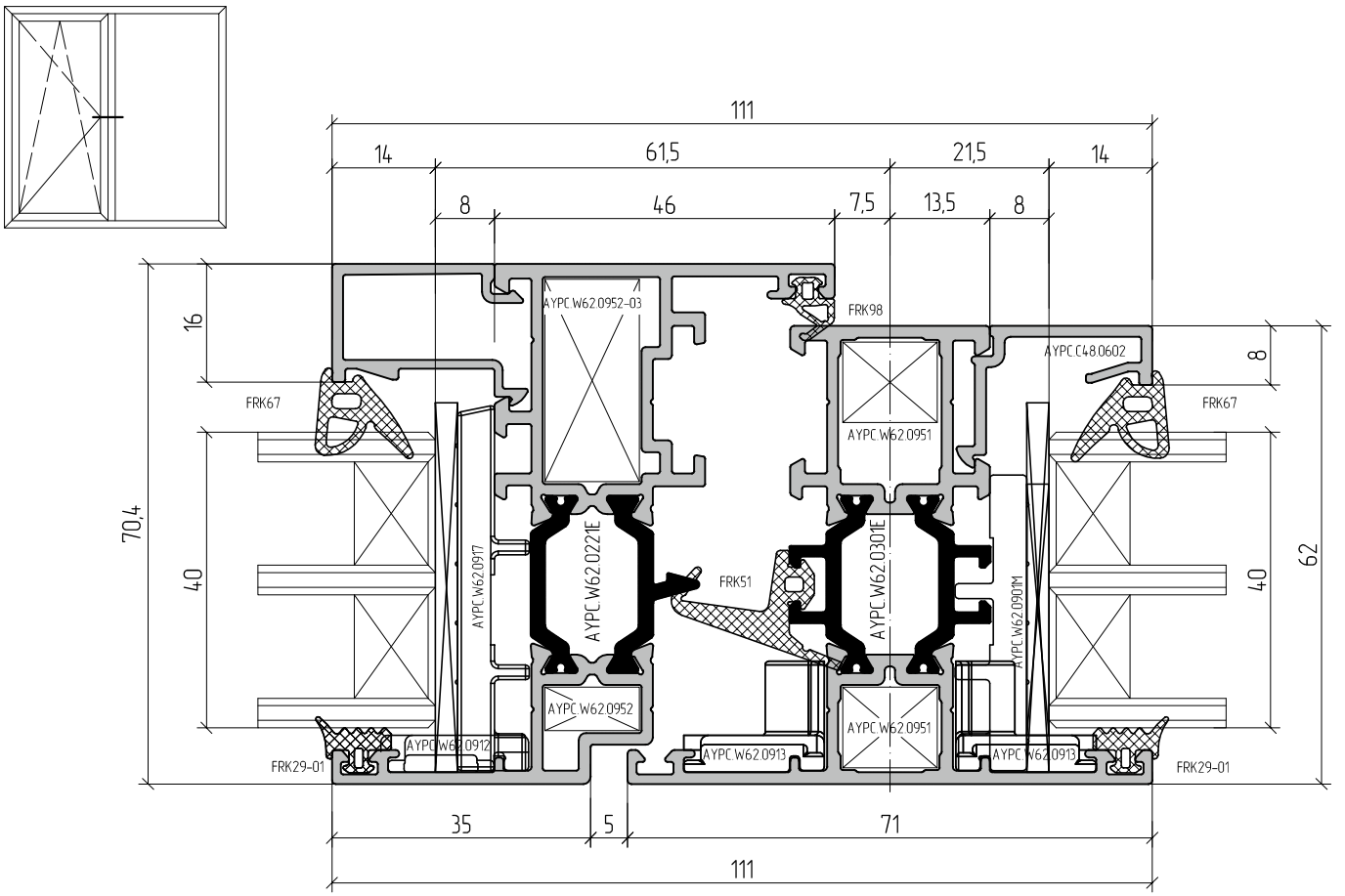
111
14
61,5
21,5
14
8
46
7,5
13,5
8
16
8
70,4
40
62
40
AYPC.W62.0952-03
FRK98
AYPC.C48.0602
FRK67
FRK67
AYPC.W62.0951
AYPC.W62.0917
AYPC.W62.0221E
FRK51
AYPC.W62.0301E
AYPC.W62.0901M
AYPC.W62.0952
AYPC.W62.0951
AYPC.W62.0912
AYPC.W62.0913
AYPC.W62.0913
FRK29-01
FRK29-01
35
5
71
111

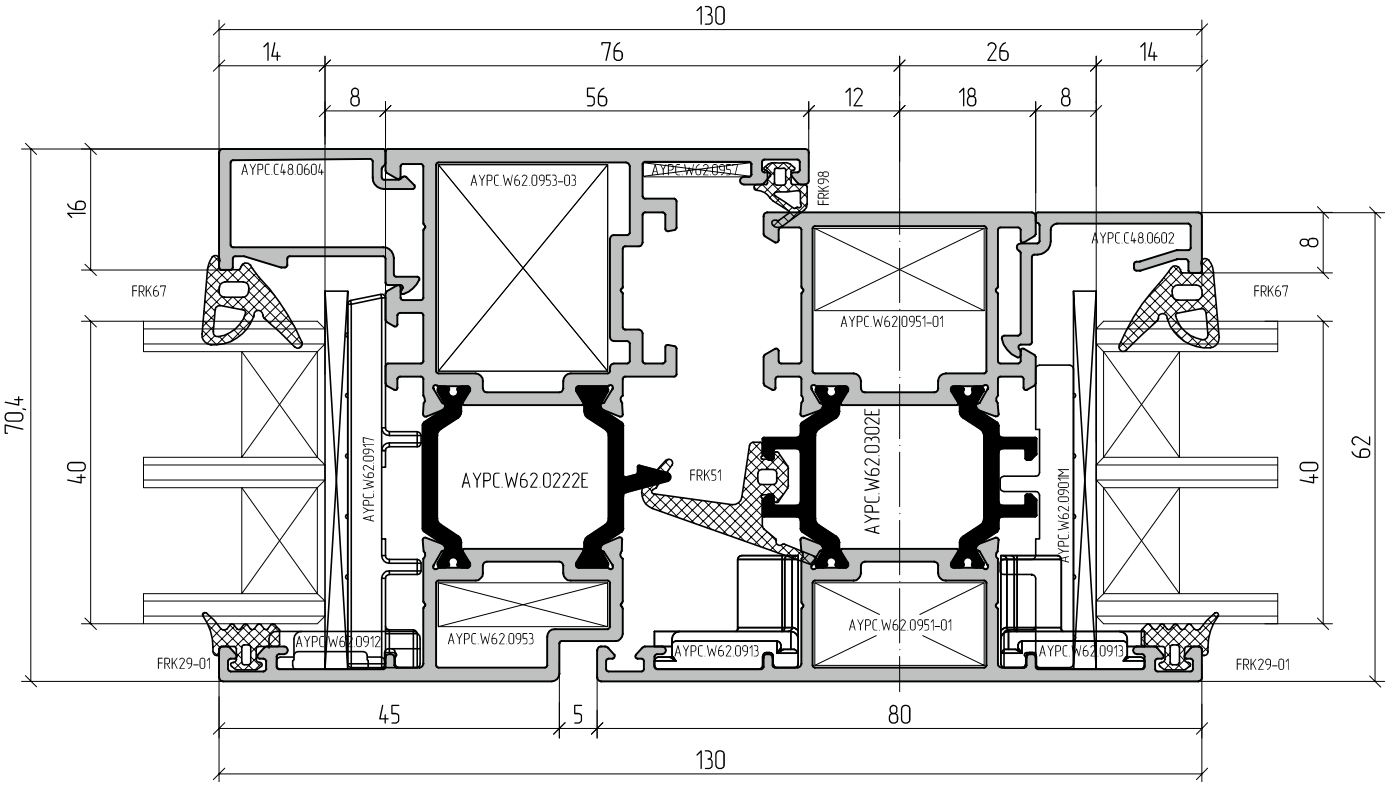
130
14
76
26
14
8
56
12
18
8
16
8
70,4
40
62
40
AYPC.C48.0604
AYPC.W62.0953-03
AYPC.W62.0957
FRK98
AYPC.C48.0602
FRK67
FRK67
AYPC.W62.0951-01
AYPC.W62.0917
AYPC.W62.0222E
FRK51
AYPC.W62.0302E
AYPC.W62.0901M
AYPC.W62.0912
AYPC.W62.0953
AYPC.W62.0913
AYPC.W62.0951-01
AYPC.W62.0913
FRK29-01
FRK29-01
45
5
80
130

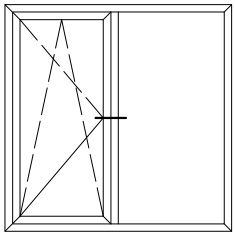

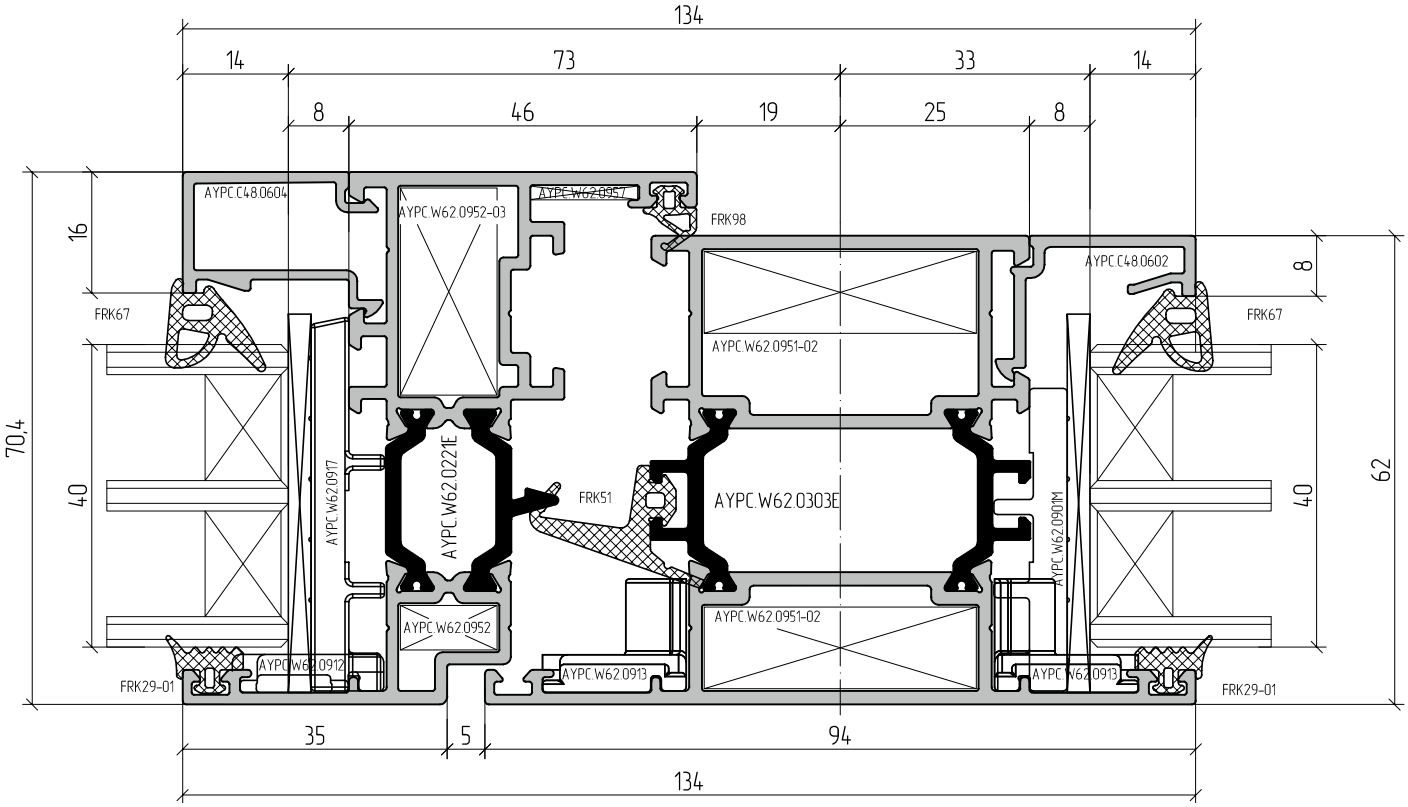
134
14
73
33
14
8
46
19
25
8
16
70,4
40
62
40
8
AYPC.C48.0604
AYPC.W62.0952-03
AYPC.W62.0957
FRK98
AYPC.C48.0602
FRK67
FRK67
AYPC.W62.0951-02
AYPC.W62.0917
AYPC.W62.0221E
FRK51
AYPC.W62.0303E
AYPC.W62.0901M
AYPC.W62.0952
AYPC.W62.0951-02
AYPC.W62.0912
AYPC.W62.0913
AYPC.W62.0913
FRK29-01
FRK29-01
35
5
94
134

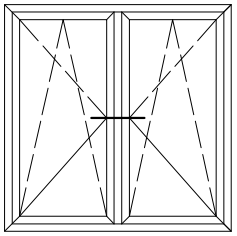

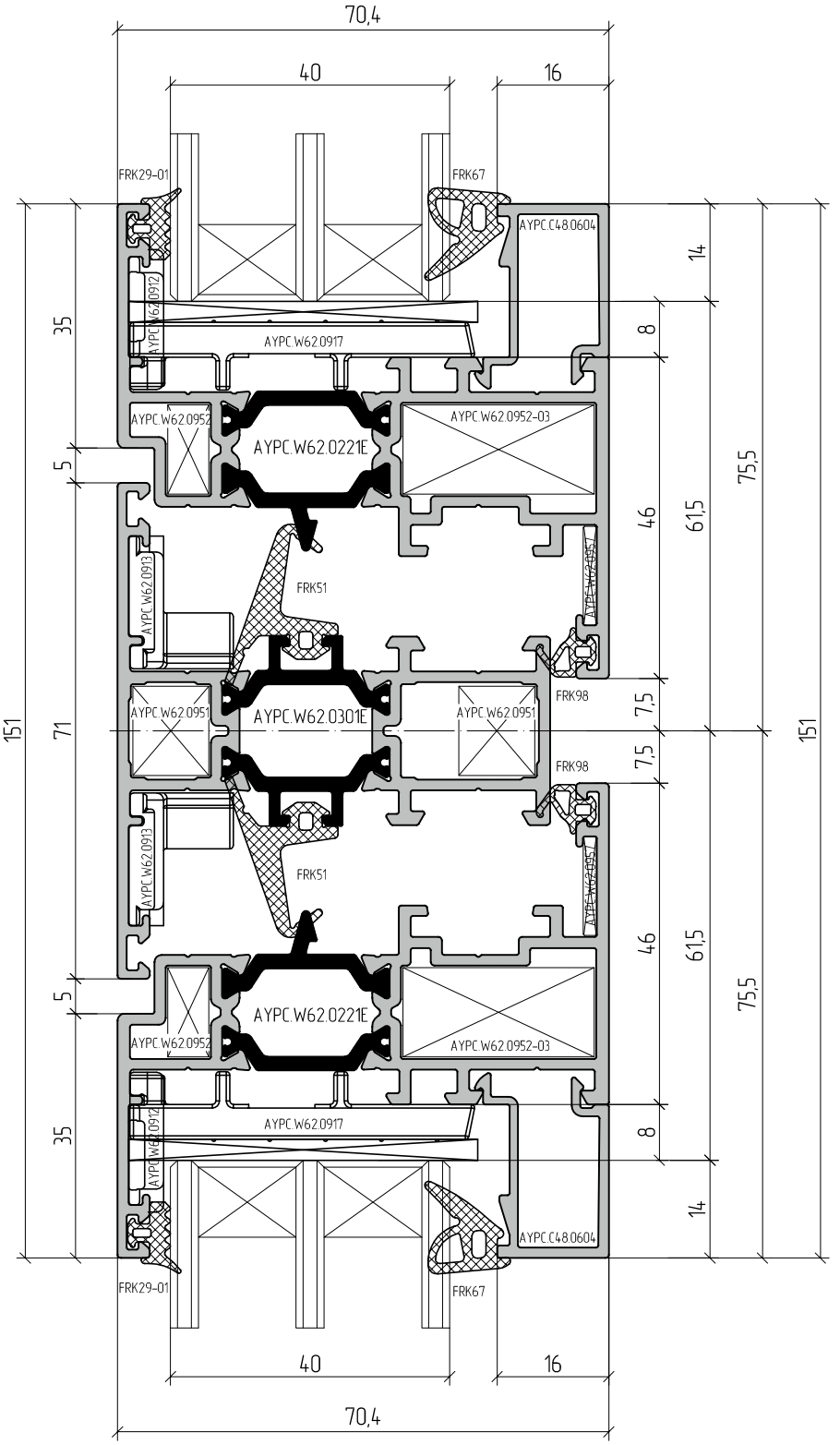
70,4
40
16
FRK29-01
FRK67
AYPC.C48.0604
AYPC.W62.0912
AYPC.W62.0917
AYPC.W62.0952
AYPC.W62.0952-03
AYPC.W62.0221E
AYPC.W62.0913
AYPC.W62.0957
FRK51
FRK98
AYPC.W62.0951
AYPC.W62.0301E
151
71
35
5
14
8
46
61,5
75,5
7,5

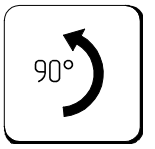
90°

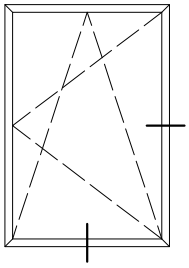

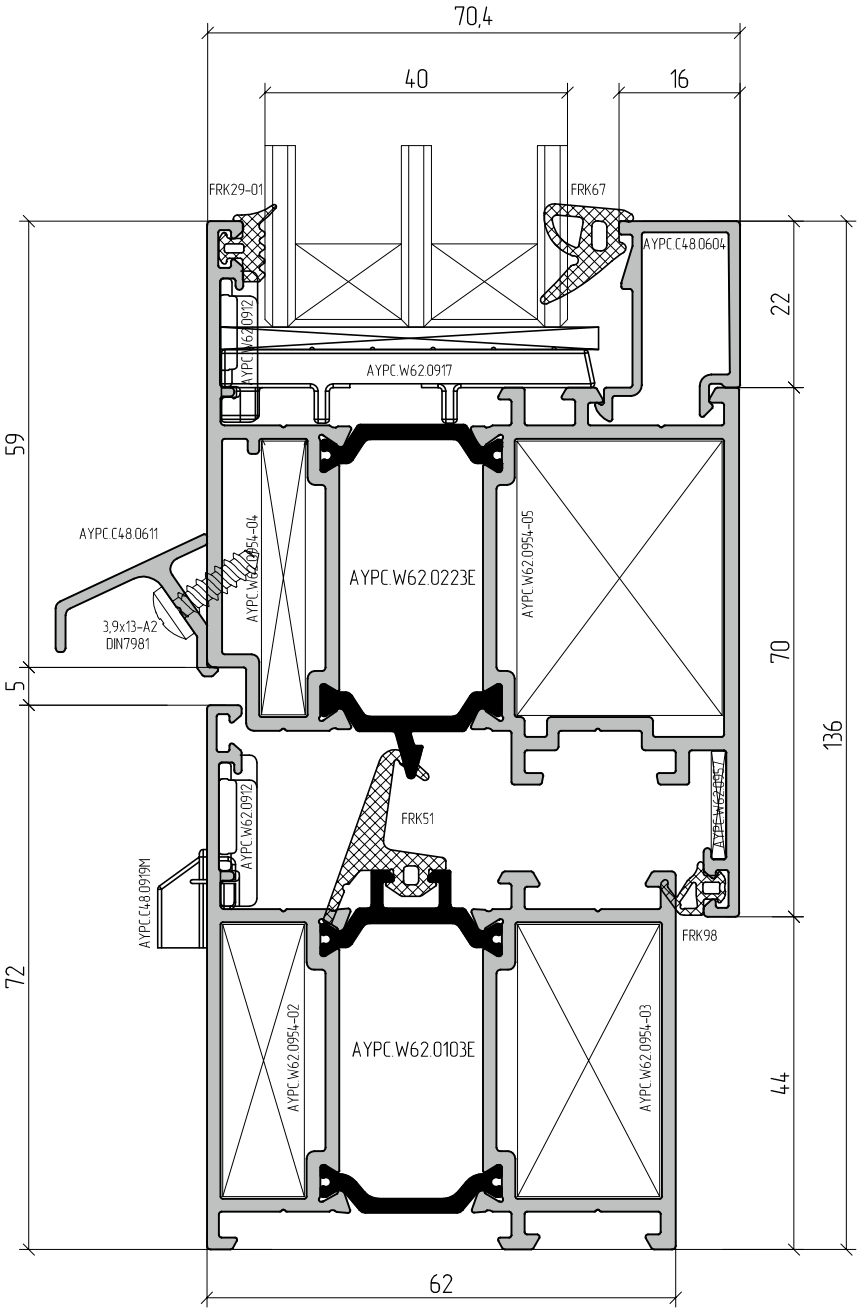
70,4
40
16
FRK29-01
FRK67
AYPC.C48.0604
AYPC.W62.0912
AYPC.W62.0917
22
59
AYPC.C48.0611
AYPC.W62.0954-04
AYPC.W62.0223E
AYPC.W62.0954-05
3,9x13-A2
DIN7981
70
5
136
FRK51
AYPC.W62.0912
AYPC.W62.0957
AYPC.C48.0919M
FRK98
72
AYPC.W62.0954-02
AYPC.W62.0103E
AYPC.W62.0954-03
44
62

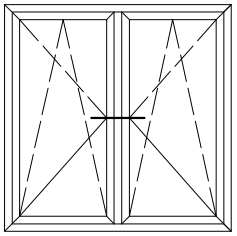

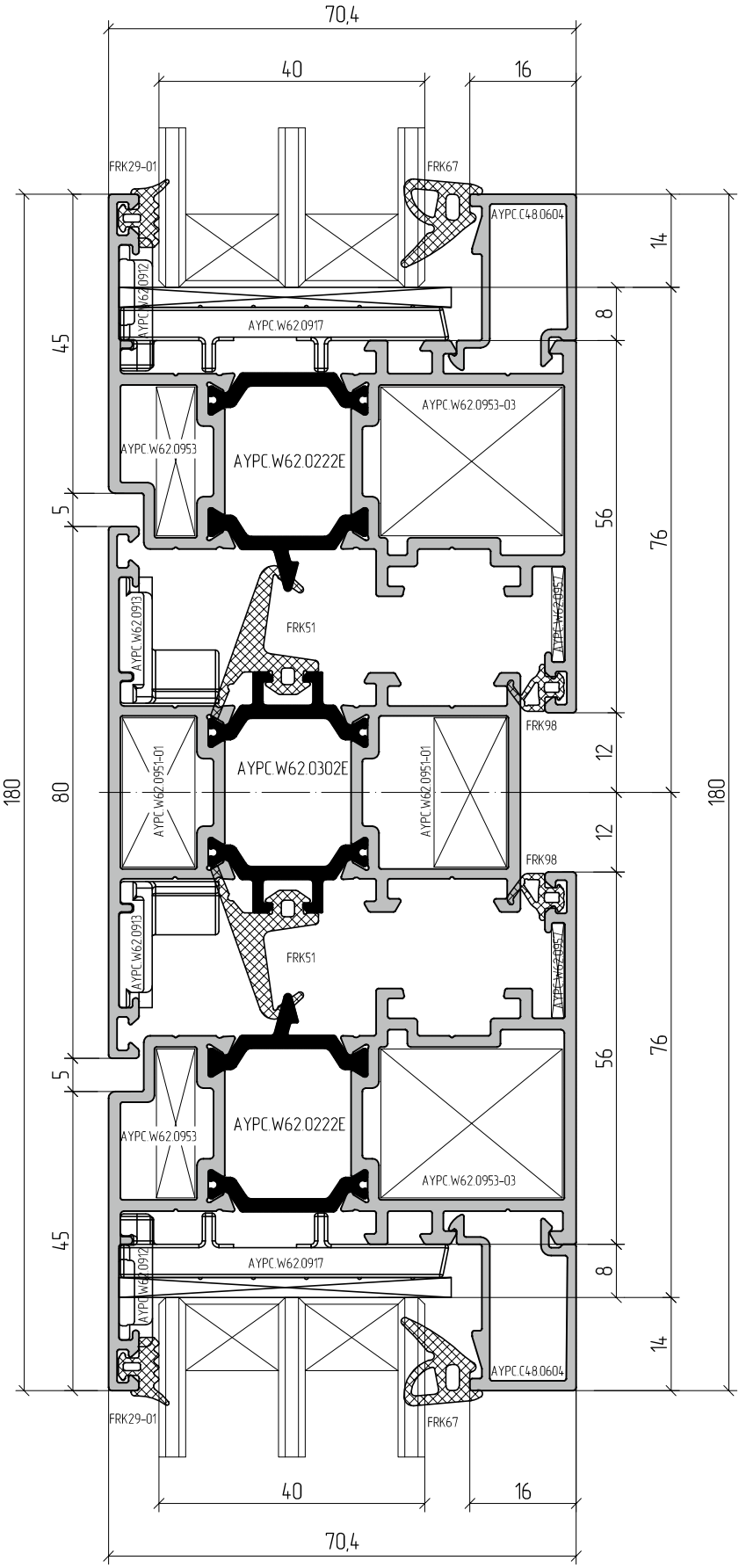
70,4
40
16
FRK29-01
FRK67
AYPC.C48.0604
AYPC.W62.0912
AYPC.W62.0917
AYPC.W62.0953-03
AYPC.W62.0953
AYPC.W62.0222E
FRK51
AYPC.W62.0913
AYPC.W62.0957
FRK98
AYPC.W62.0302E
AYPC.W62.0951-01
180
80
45
5
14
8
56
76
12

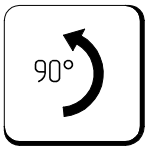
90°

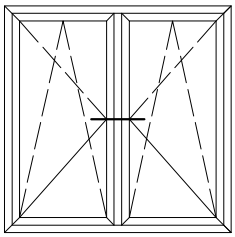

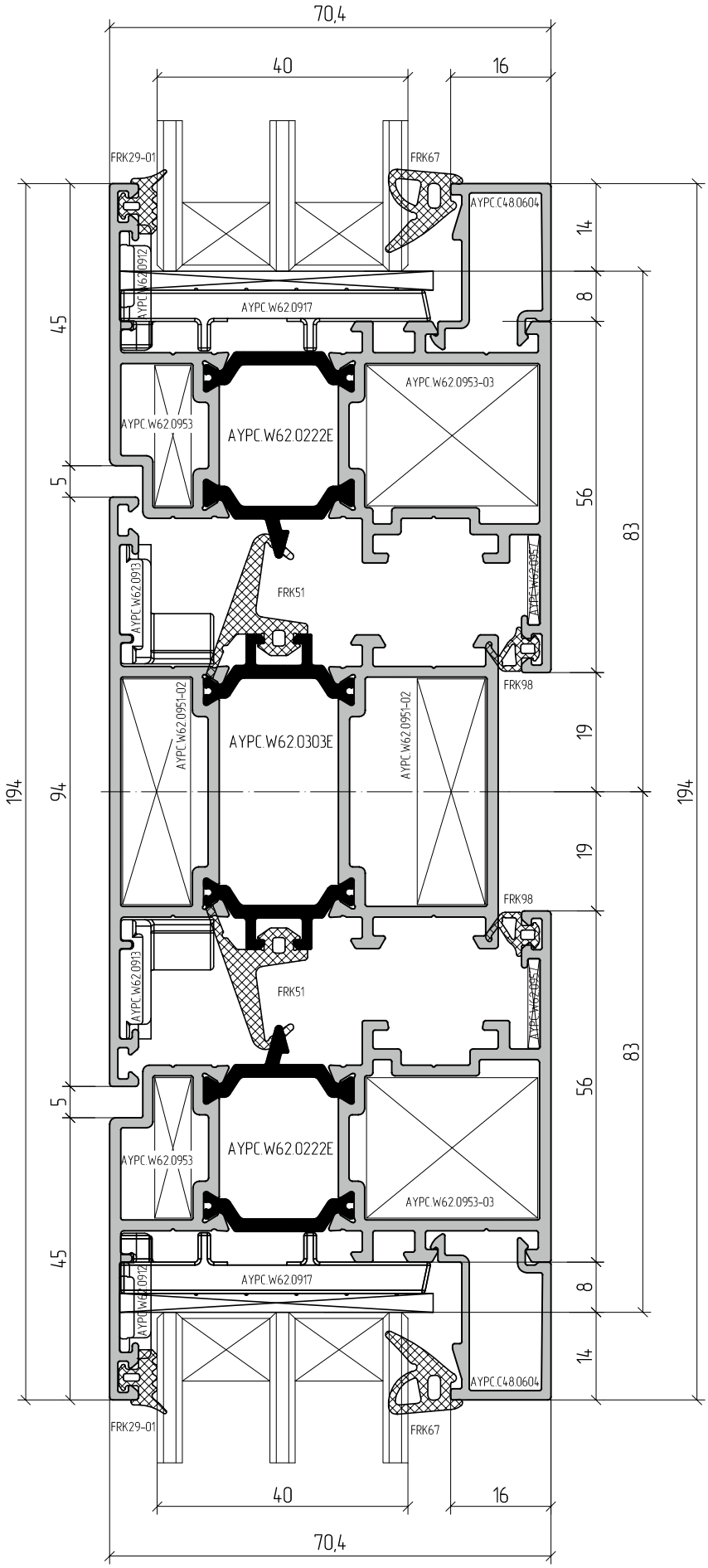
70,4
40
16
FRK29-01
FRK67
AYPC.C48.0604
AYPC.W62.0912
AYPC.W62.0917
AYPC.W62.0953-03
AYPC.W62.0953
AYPC.W62.0222E
AYPC.W62.0913
FRK51
AYPC.W62.0957
FRK98
AYPC.W62.0951-02
AYPC.W62.0303E
14
8
45
5
56
83
19
194
94

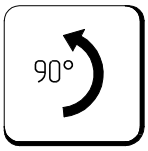
90°

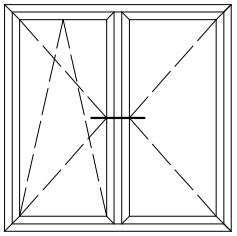

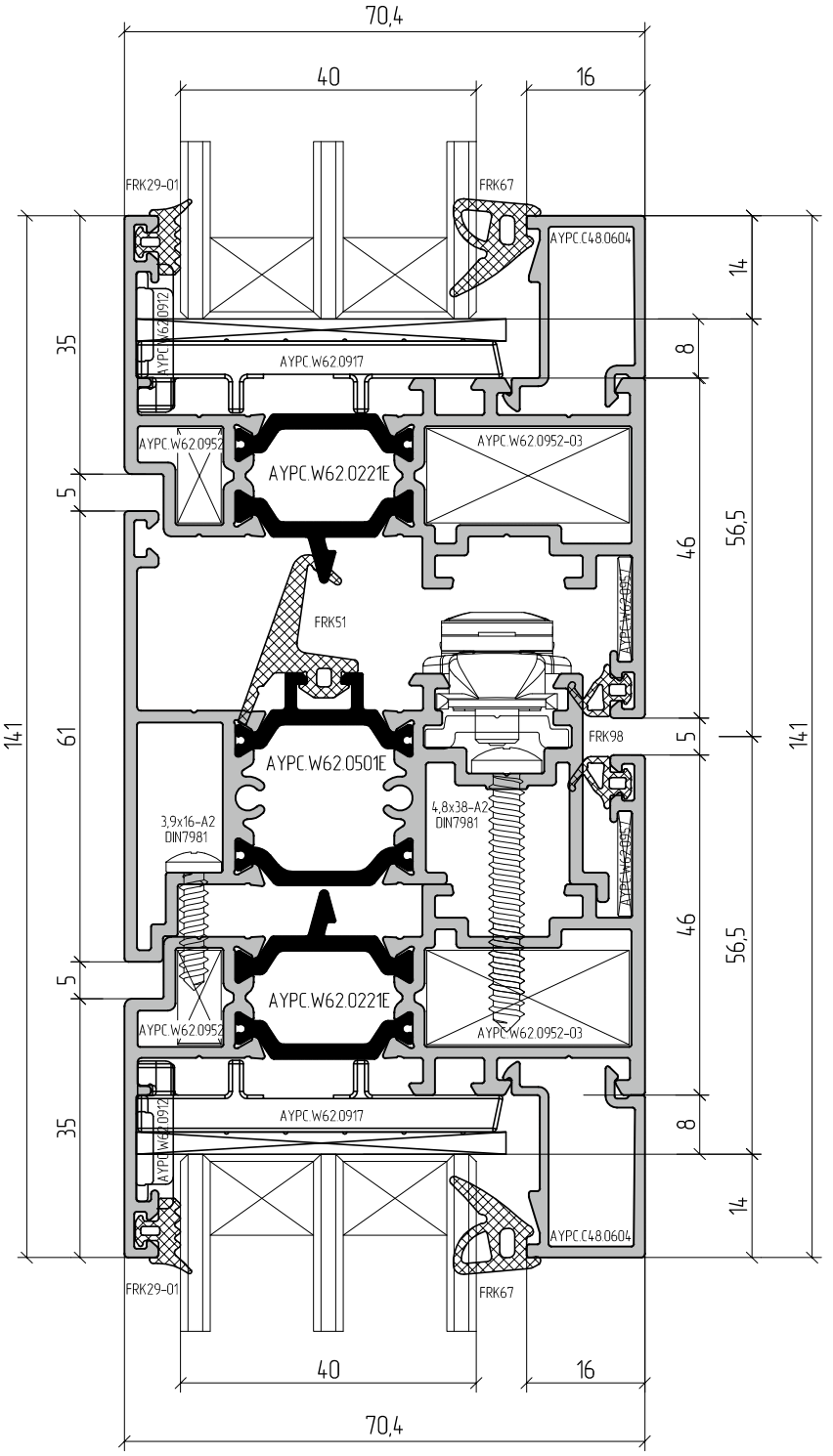
70,4
40
16
FRK29-01
FRK67
AYPC.C48.0604
AYPC.W62.0912
AYPC.W62.0917
AYPC.W62.0952
AYPC.W62.0952-03
AYPC.W62.0221E
FRK51
AYPC.W62.0501E
FRK98
3,9x16-A2
DIN7981
4,8x38-A2
DIN7981
14
8
46
56,5
5
35
61
14,1

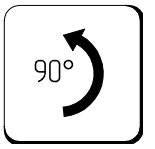
90°

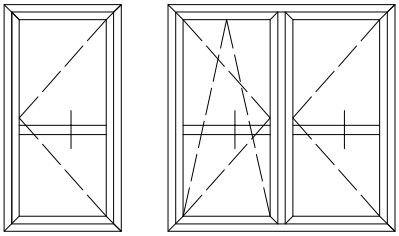

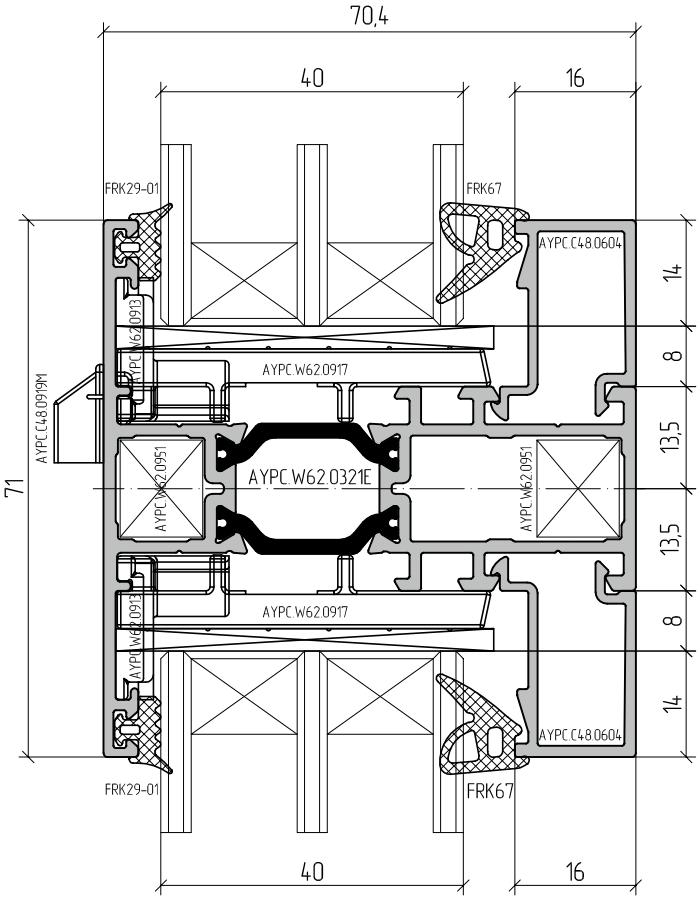
70,4
40
16
FRK29-01
FRK67
AYPC.C48.0604
AYPC.W62.0913
AYPC.W62.0917
AYPC.C48.0919M
AYPC.W62.0951
AYPC.W62.0321E
71
14
8
13,5
13,5
8
14
40
16

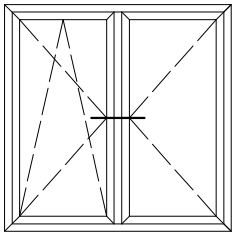

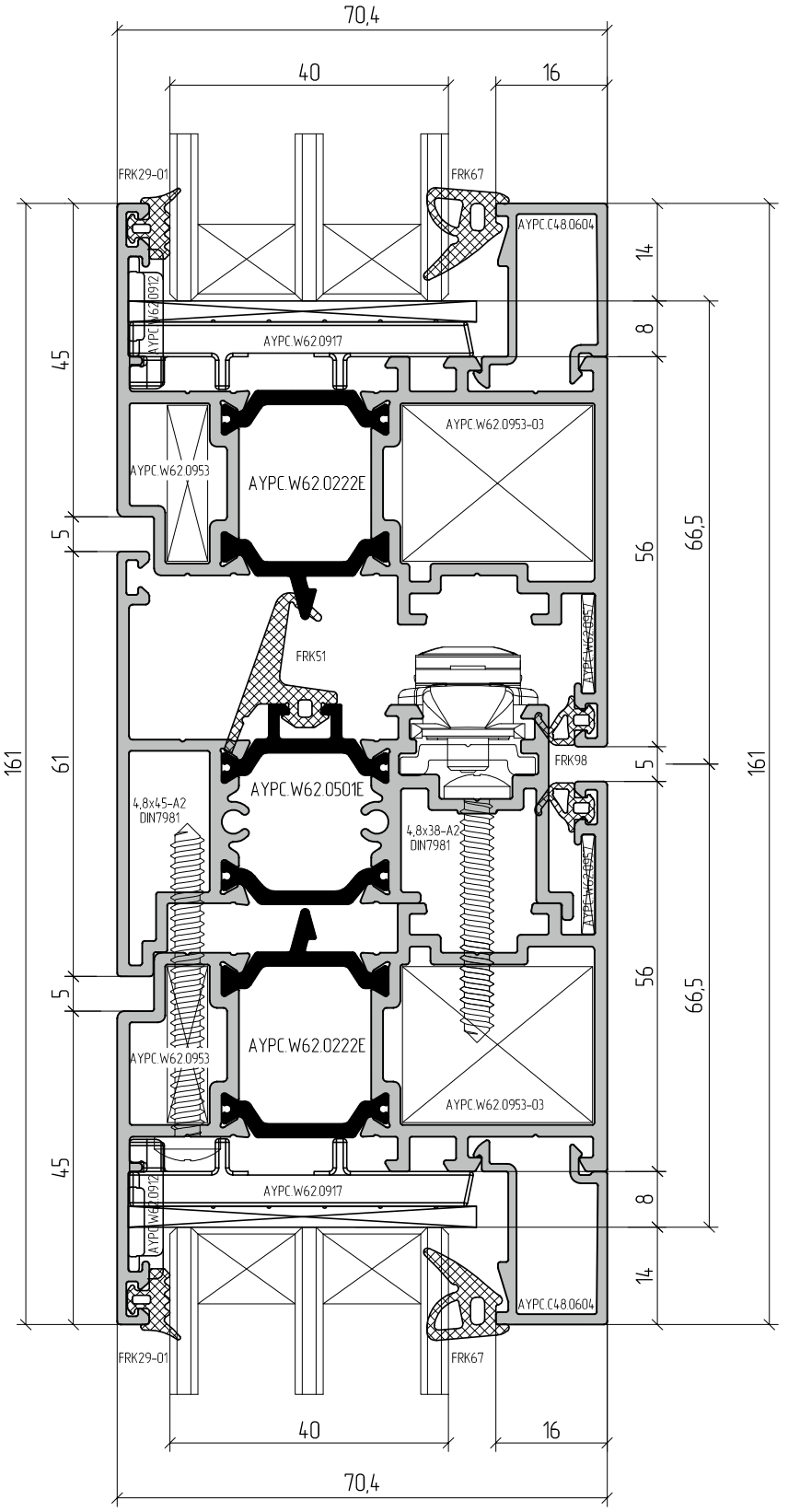
70,4
40
16
FRK29-01
FRK67
AYPC.C48.0604
AYPC.W62.0912
AYPC.W62.0917
AYPC.W62.0953-03
AYPC.W62.0953
AYPC.W62.0222E
FRK51
AYPC.W62.0957
FRK98
AYPC.W62.0501E
4,8x45-A2
DIN7981
4,8x38-A2
DIN7981
161
61
45
5
56
66,5
14
8

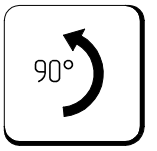
90°

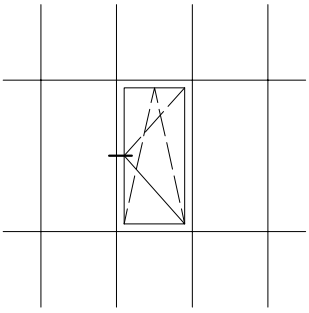

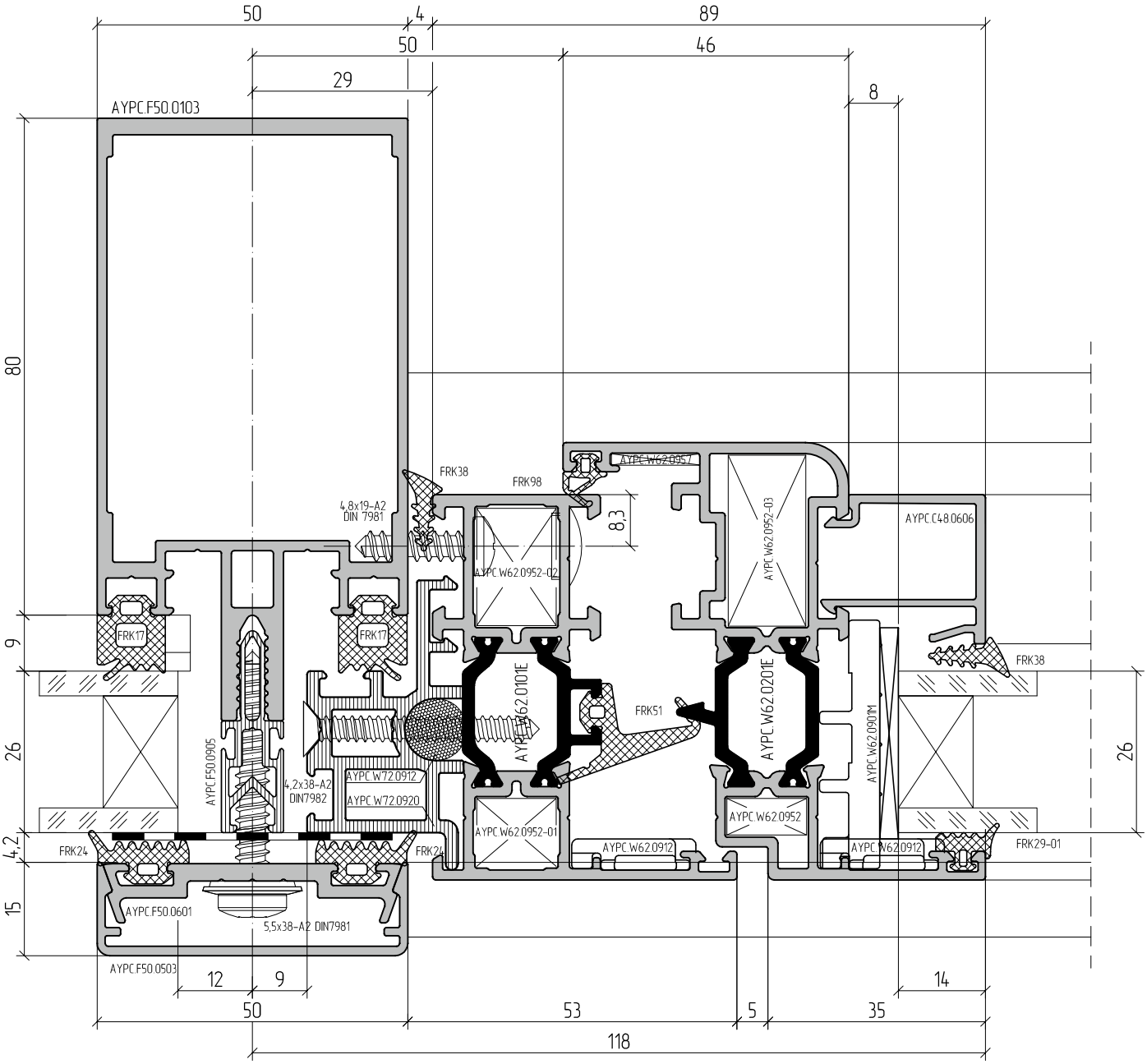
50
4
89
50
46
29
8
AYPC.F50.0103
80
FRK38
FRK98
AYPC.W62.0957
4,8x19-A2
DIN 7981
8,3
AYPC.W62.0952-02
AYPC.W62.0952-03
AYPC.C48.0606
FRK17
FRK17
9
FRK38
AYPC.W62.0101E
FRK51
AYPC.W62.0201E
AYPC.W62.0901M
26
26
AYPC.F50.0905
4,2x38-A2
DIN7982
AYPC.W72.0912
AYPC.W72.0920
AYPC.W62.0952-01
AYPC.W62.0952
4,2
FRK24
FRK24
AYPC.W62.0912
AYPC.W62.0912
FRK29-01
15
AYPC.F50.0601
5,5x38-A2 DIN7981
AYPC.F50.0503
12
9
14
50
53
5
35
118

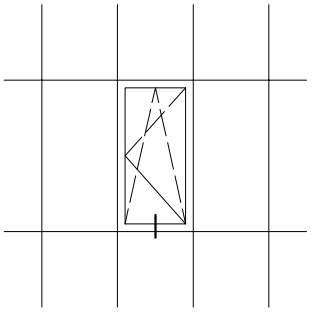

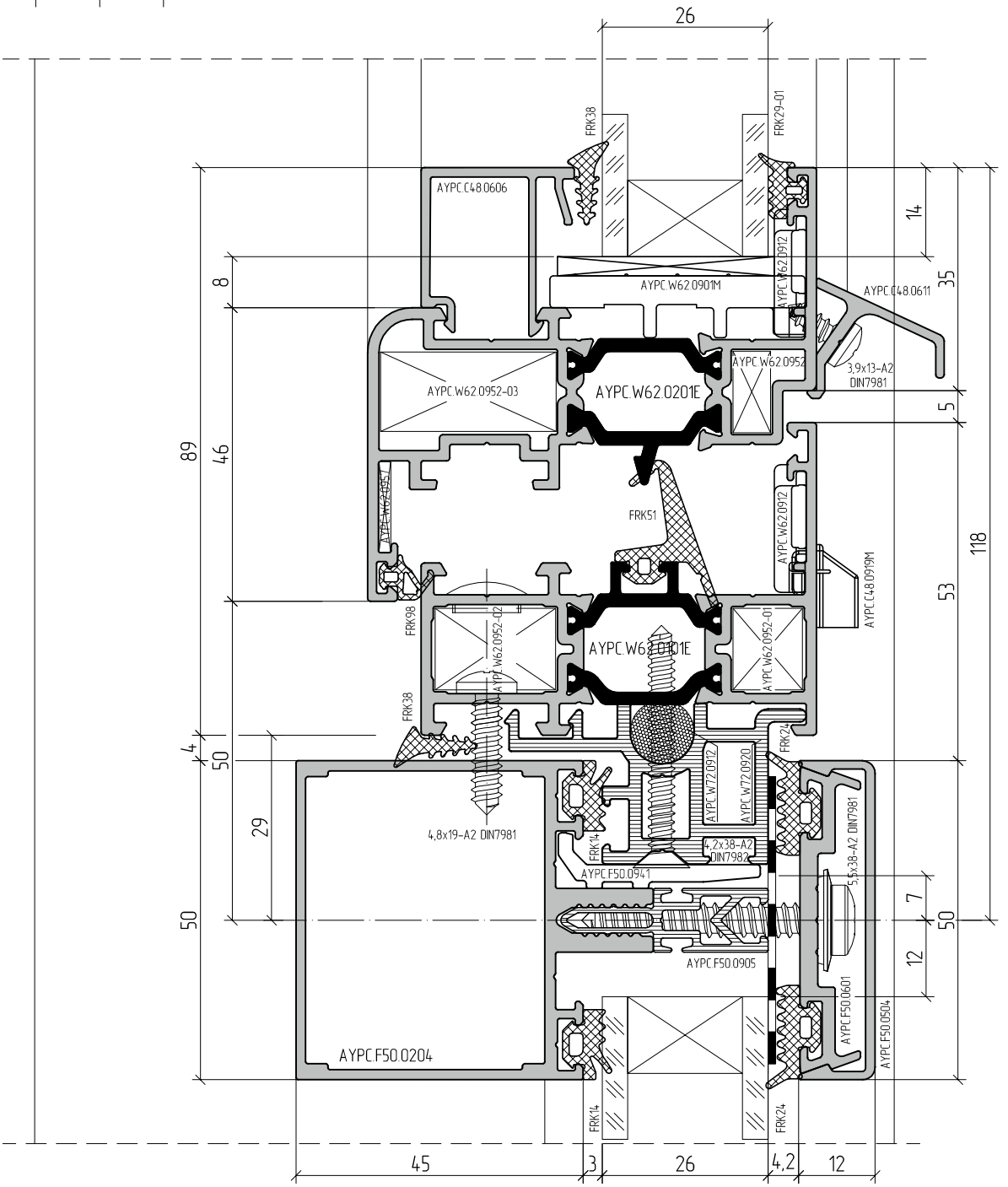
26
FRK38
FRK29-01
AYPC.C48.0606
AYPC.W62.0901M
AYPC.W62.0912
AYPC.C48.0611
AYPC.W62.0952
3,9x13-A2 DIN7981
AYPC.W62.0952-03
AYPC.W62.0201E
FRK51
AYPC.W62.0912
AYPC.C48.0919M
FRK98
AYPC.W62.0952-02
AYPC.W62.0101E
AYPC.W62.0952-01
FRK38
FRK24
AYPC.W72.0912
AYPC.W72.0920
4,8x19-A2 DIN7981
FRK14
4,2x38-A2 DIN7982
AYPC.F50.0941
5,5x38-A2 DIN7981
AYPC.F50.0905
AYPC.F50.0601
AYPC.F50.0504
AYPC.F50.0204
FRK14
FRK24
14
35
8
89
46
5
118
53
4
50
29
50
7
50
12
45
3
26
4,2
12

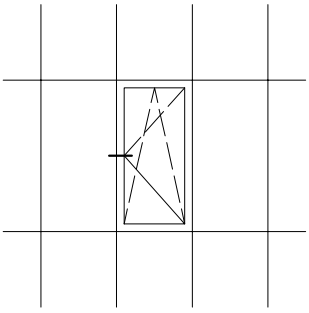

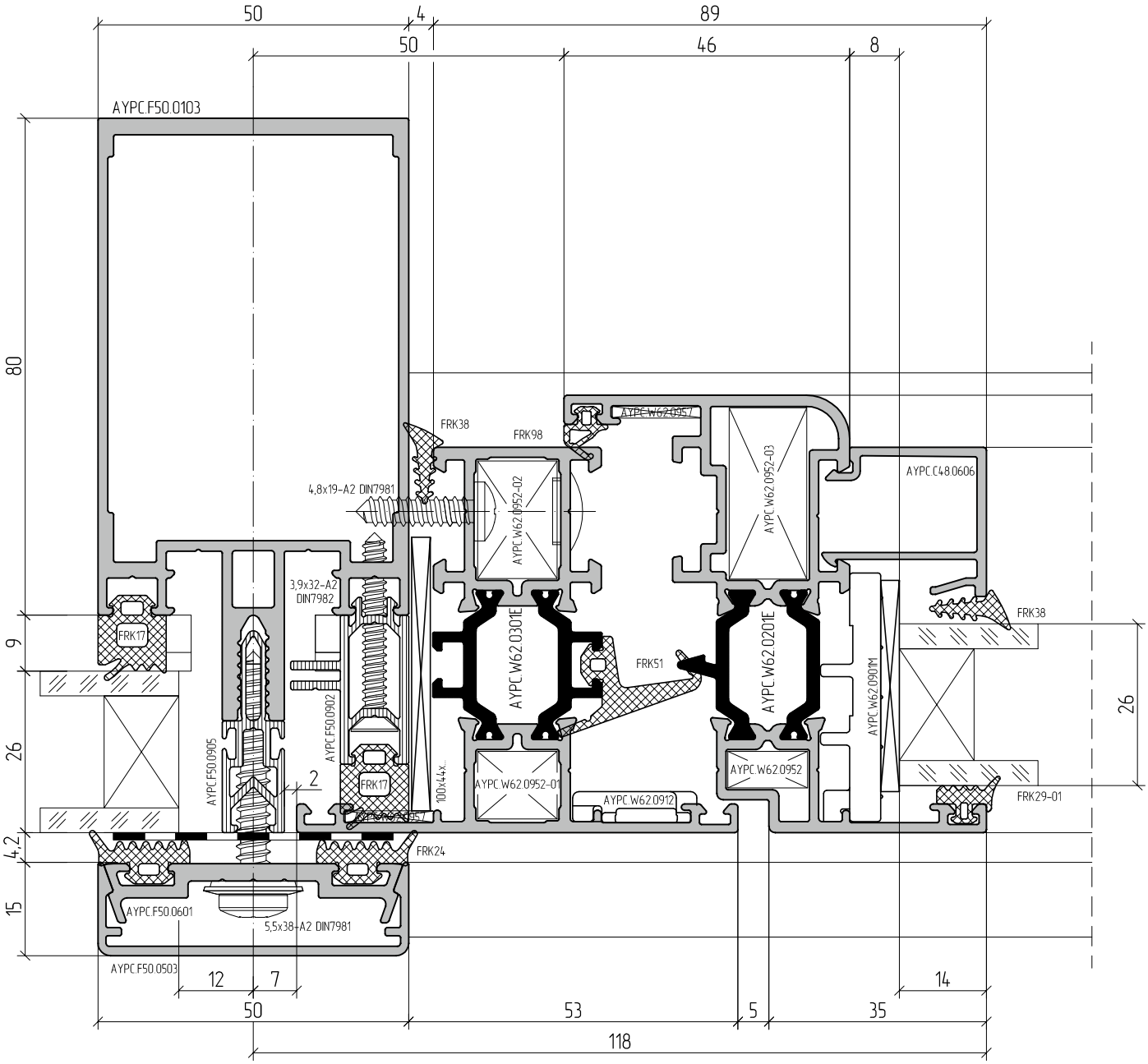
50
4
89
50
46
8
AYPC.F50.0103
80
FRK38
FRK98
AYPC.W62.0957
AYPC.W62.0952-03
AYPC.C48.0606
4,8x19-A2 DIN7981
AYPC.W62.0952-02
3,9x32-A2
DIN7982
FRK17
9
AYPC.W62.0301E
AYPC.W62.0201E
FRK51
FRK38
26
AYPC.F50.0905
AYPC.F50.0902
2
FRK17
100x44x.
AYPC.W62.0952-01
AYPC.W62.0952
AYPC.W62.0901M
AYPC.W62.0912
FRK29-01
4,2
FRK24
15
AYPC.F50.0601
5,5x38-A2 DIN7981
AYPC.F50.0503
12
7
14
50
53
5
35
118

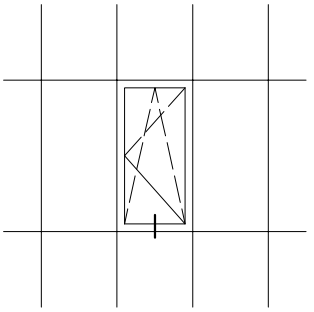

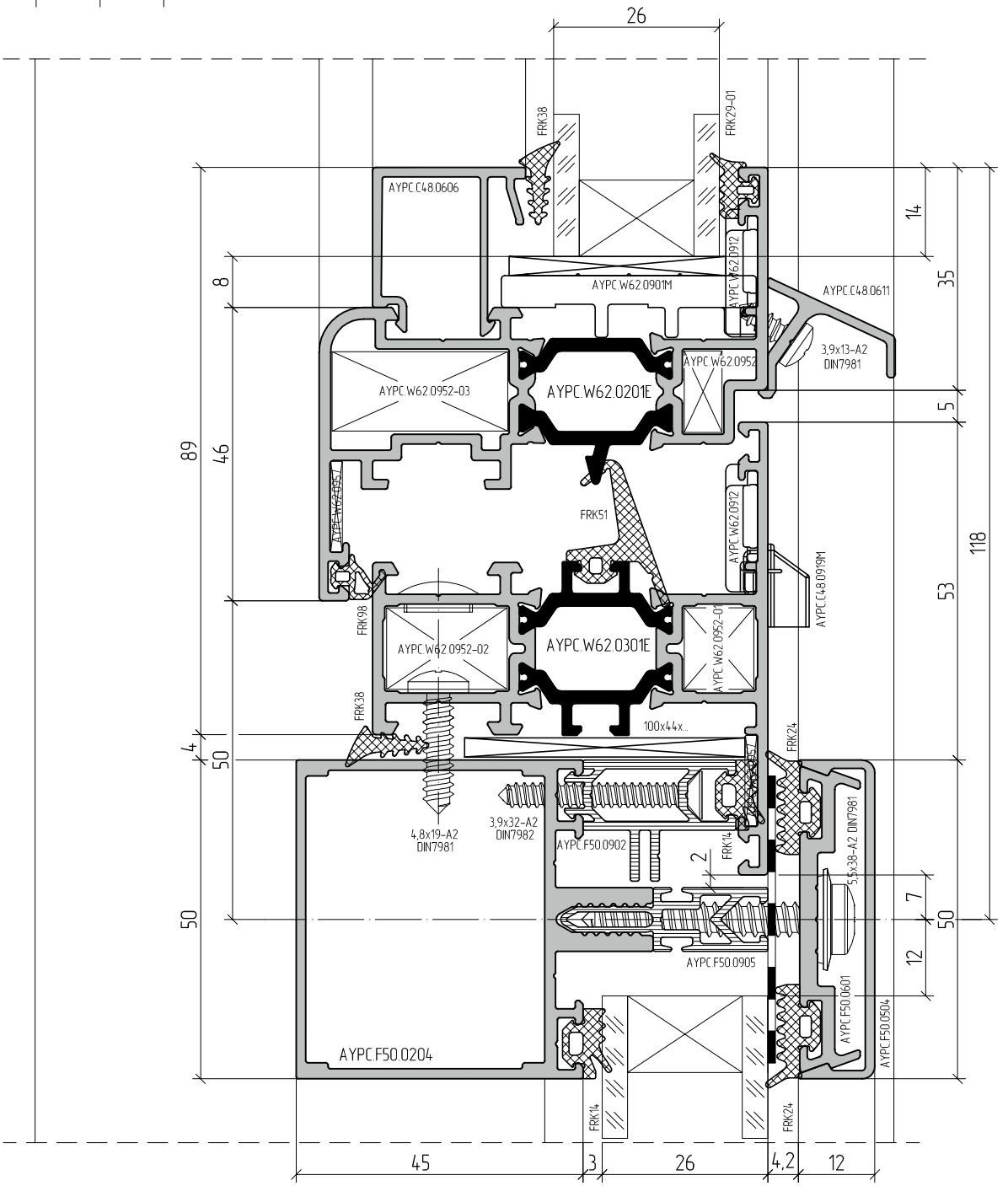
26
FRK38
FRK29-01
AYPC.C48.0606
AYPC.W62.0912
AYPC.W62.0901M
AYPC.C48.0611
3,9x13-A2
DIN7981
AYPC.W62.0952
AYPC.W62.0952-03
AYPC.W62.0201E
FRK51
AYPC.W62.0912
AYPC.C48.0919M
FRK98
AYPC.W62.0952-02
AYPC.W62.0301E
AYPC.W62.0952-01
FRK38
100x44x...
FRK24
4,8x19-A2
DIN7981
3,9x32-A2
DIN7982
AYPC.F50.0902
FRK14
5,5x38-A2 DIN7981
AYPC.F50.0905
AYPC.F50.0601
AYPC.F50.0504
AYPC.F50.0204
FRK14
FRK24
14
35
8
5
89
46
118
53
4
50
50
2
7
50
12
45
3
26
4,2
12

ALUTECH ALT W62
WINDOW
AND DOOR SYSTEM

DOORS.
SECTIONS
AND JUNCTIONS

08

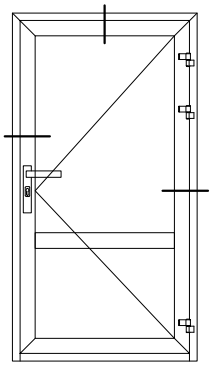

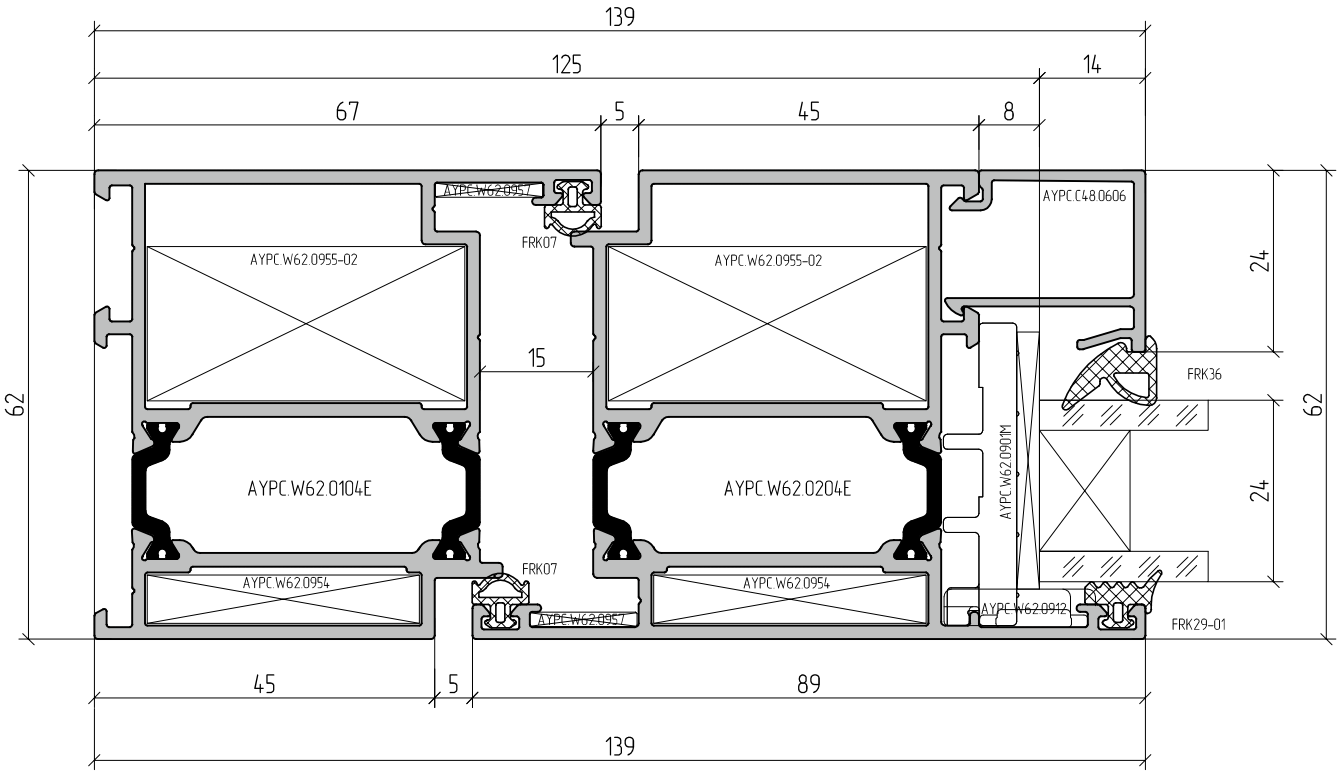
139
125
14
67
5
45
8
AYPC.W62.0957
FRK07
AYPC.W62.0955-02
AYPC.W62.0955-02
AYPC.C48.0606
24
15
FRK36
62
62
AYPC.W62.0104E
AYPC.W62.0204E
AYPC.W62.0901M
24
FRK07
AYPC.W62.0954
AYPC.W62.0954
AYPC.W62.0957
AYPC.W62.0912
FRK29-01
45
5
89
139

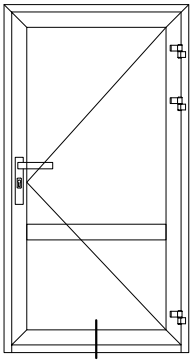

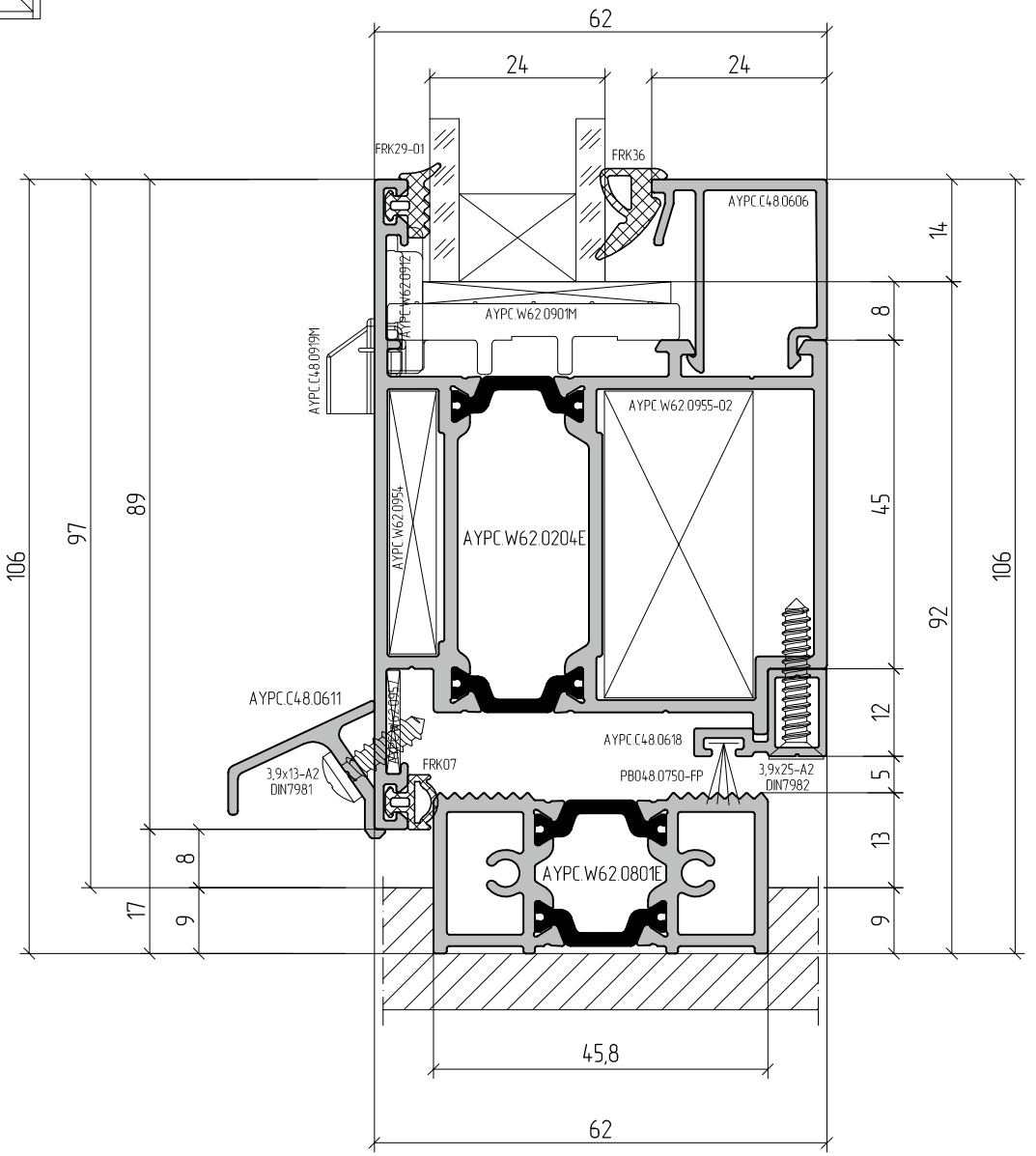
62
24
24
FRK29-01
FRK36
AYPC.C48.0606
AYPC.W62.0901M
AYPC.C48.0999M
AYPC.W62.0955-02
AYPC.W62.0954
AYPC.W62.0204E
AYPC.C48.0611
AYPC.C48.0618
FRK07
3,9x13-A2
DIN7981
PB048.0750-FP
3,9x25-A2
DIN7982
AYPC.W62.0801E
106
97
89
17
8
9
14
8
45
92
106
12
5
13
9
45,8
62

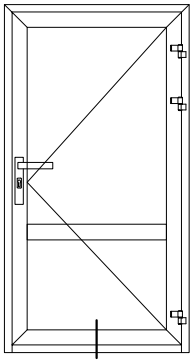

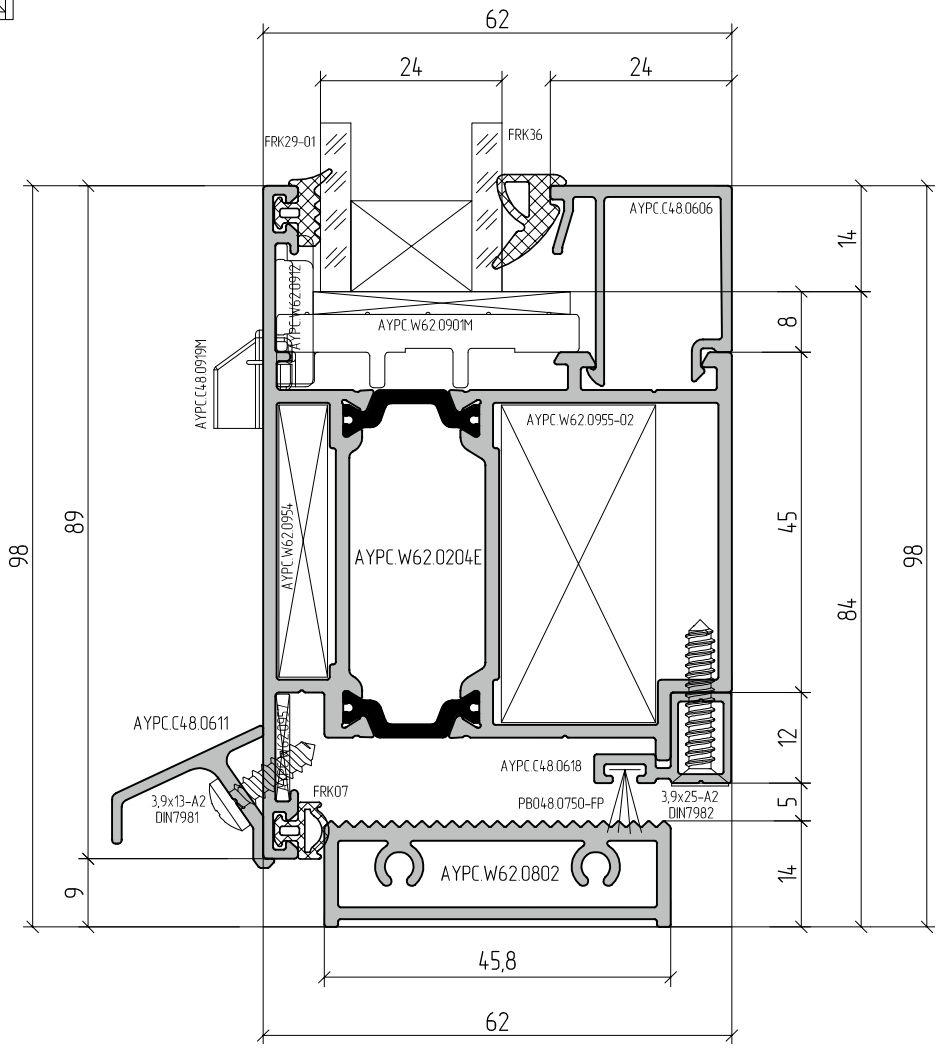
62
24
24
FRK29-01
FRK36
AYPC.C48.0606
AYPC.W62.0912
AYPC.W62.0901M
AYPC.C48.0919M
AYPC.W62.0955-02
AYPC.W62.0954
AYPC.W62.0204E
AYPC.C48.0611
AYPC.C48.0618
FRK07
3,9x13-A2
DIN7981
PB048.0750-FP
3,9x25-A2
DIN7982
AYPC.W62.0802
98
89
9
14
8
45
84
98
12
5
14
45,8
62

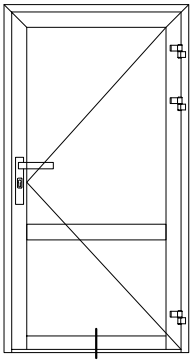

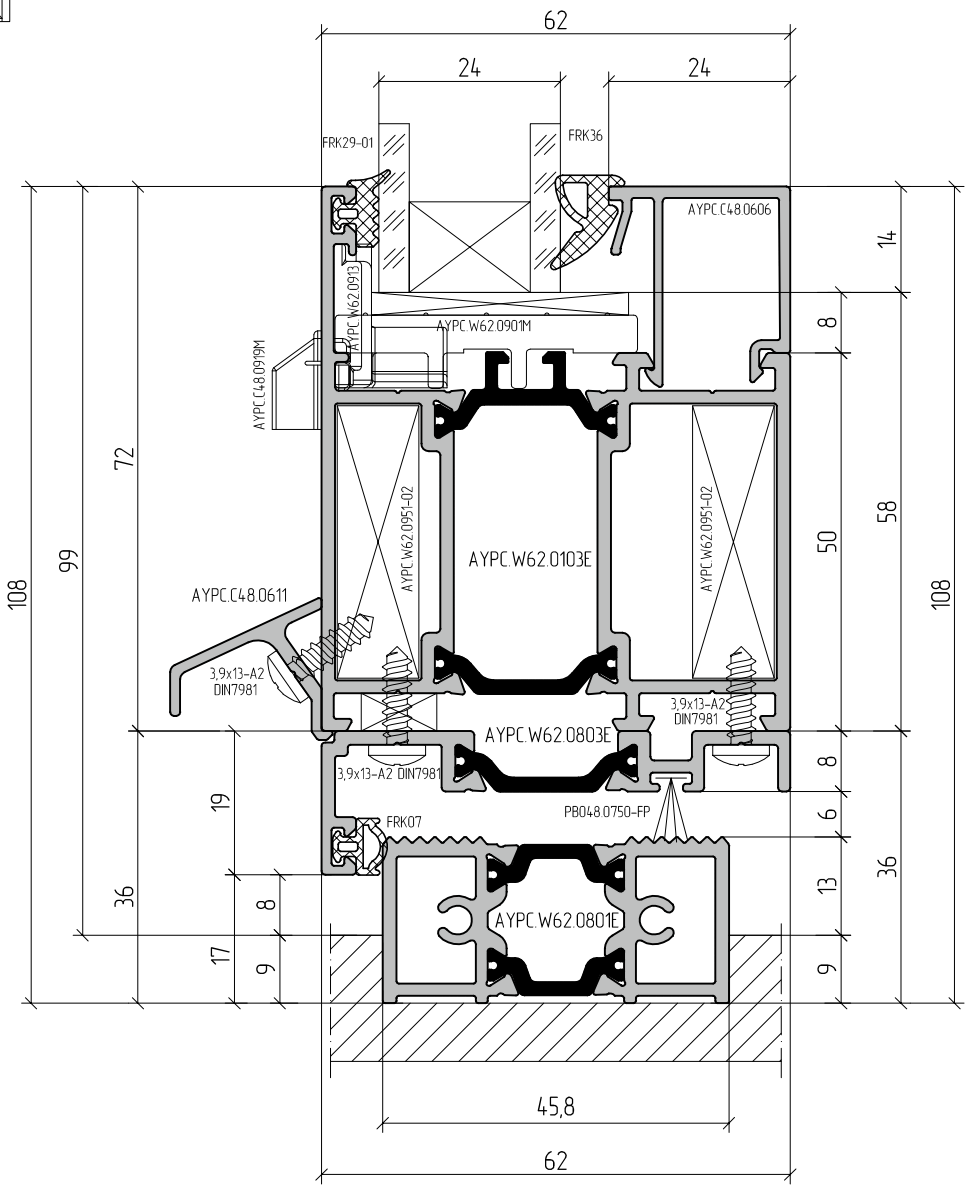
62
24
24
FRK29-01
FRK36
AYPC.C48.0606
AYPC.W62.0913
AYPC.W62.0901M
AYPC.C48.0919M
AYPC.W62.0951-02
AYPC.W62.0103E
AYPC.W62.0951-02
AYPC.C48.0611
3,9x13-A2 DIN7981
3,9x13-A2 DIN7981
AYPC.W62.0803E
3,9x13-A2 DIN7981
PB048.0750-FP
FRK07
AYPC.W62.0801E
108
99
72
36
19
8
17
9
14
8
58
50
8
6
13
9
36
108
45,8
62

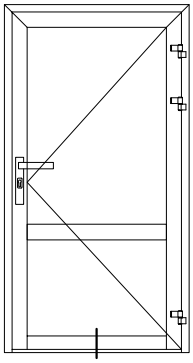

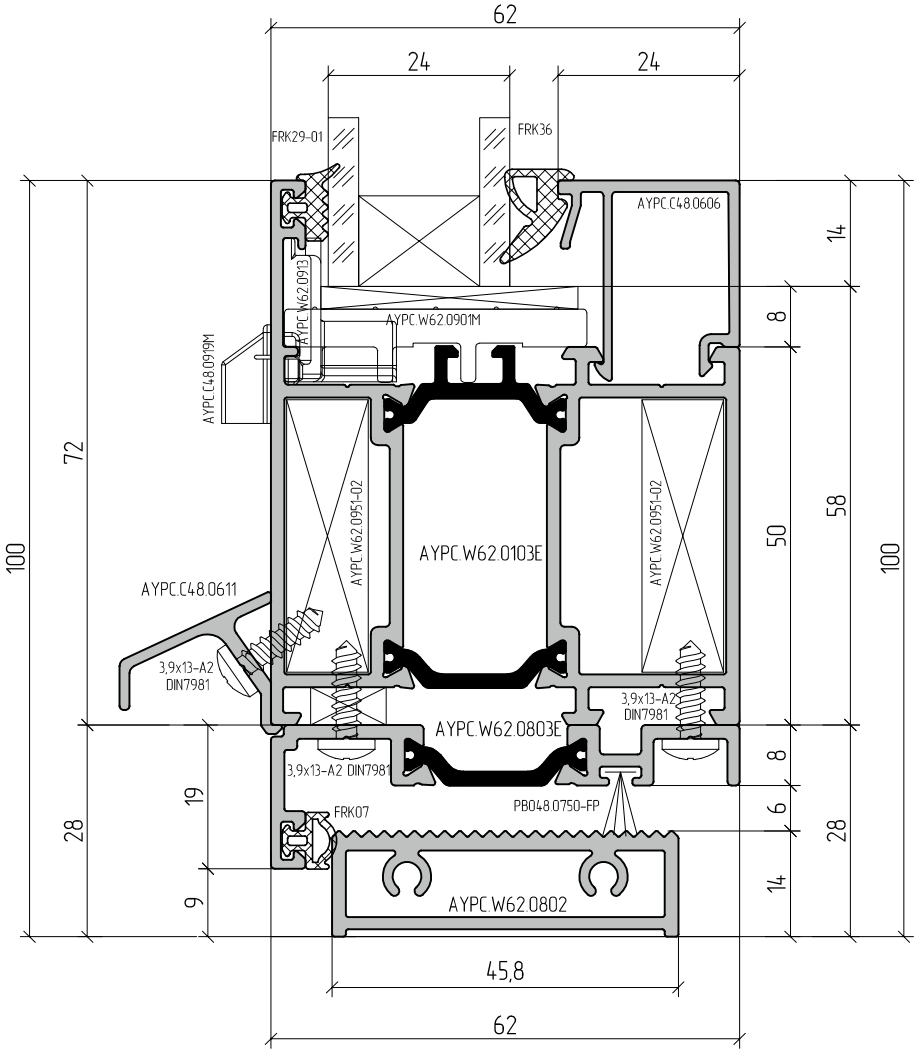
62
24
24
FRK29-01
FRK36
AYPC.C48.0606
AYPC.W62.0901M
AYPC.W62.093
AYPC.C48.0999M
AYPC.W62.0951-02
AYPC.W62.0951-02
AYPC.W62.0103E
AYPC.C48.0611
3,9x13-A2
DIN7981
3,9x13-A2
DIN7981
AYPC.W62.0803E
3,9x13-A2 DIN7981
FRK07
PB048.0750-FP
AYPC.W62.0802
45,8
62
100
72
28
19
9
14
8
58
50
8
6
14
28
100

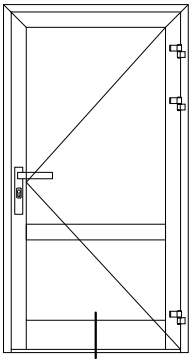

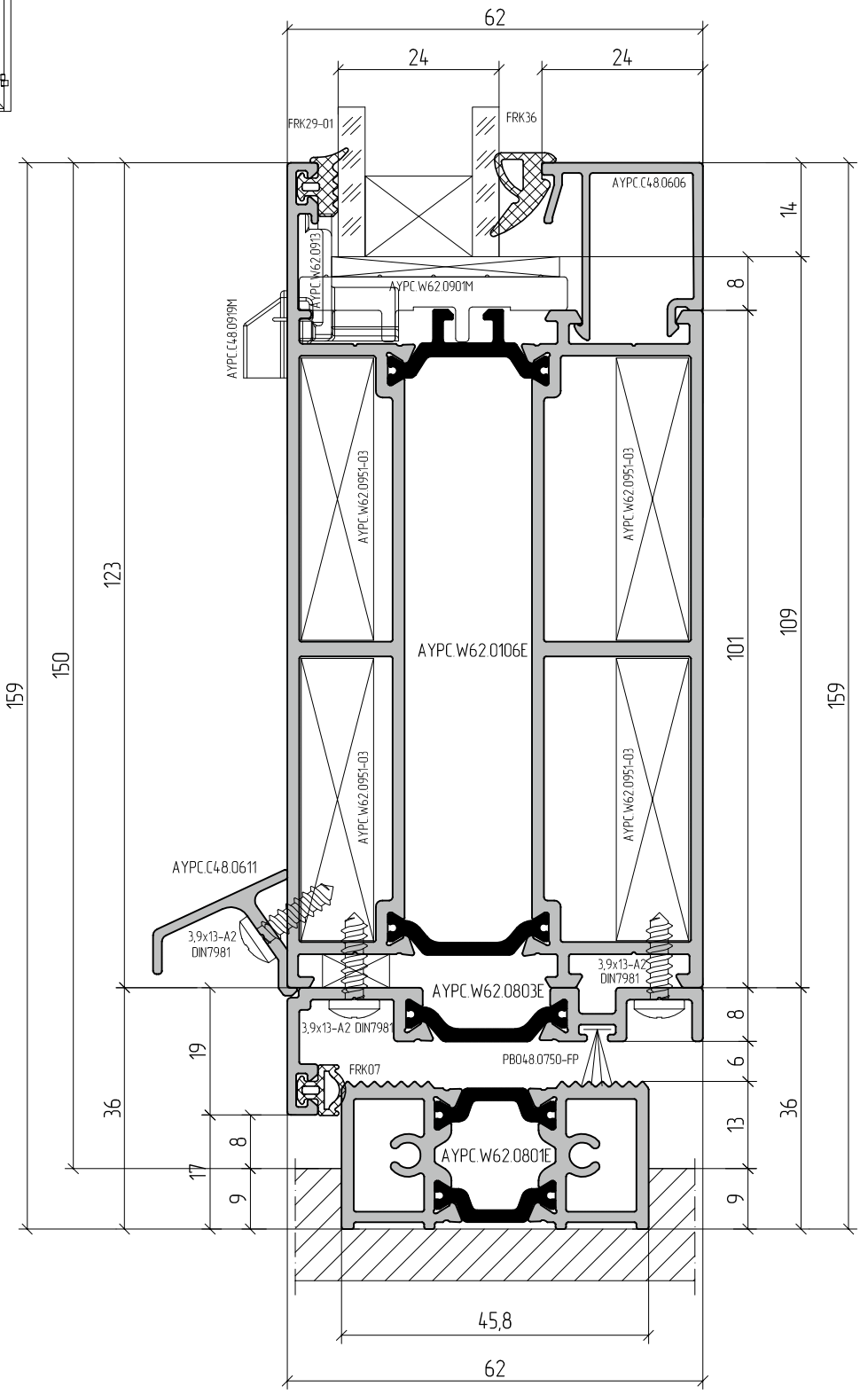
62
24
24
FRK29-01
FRK36
AYPC.C48.0606
AYPC.W62.0913
AYPC.W62.0901M
AYPC.C48.0919M
AYPC.W62.0951-03
AYPC.W62.0951-03
AYPC.W62.0106E
AYPC.W62.0951-03
AYPC.W62.0951-03
AYPC.C48.0611
3,9x13-A2 DIN7981
3,9x13-A2 DIN7981
AYPC.W62.0803E
3,9x13-A2 DIN7981
PB048.0750-FP
FRK07
AYPC.W62.0801E
159
150
123
14
8
101
109
159
8
6
13
9
36
19
8
17
9
36
45,8
62

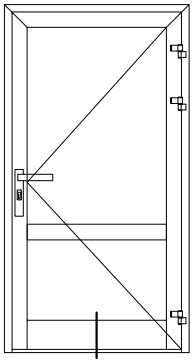

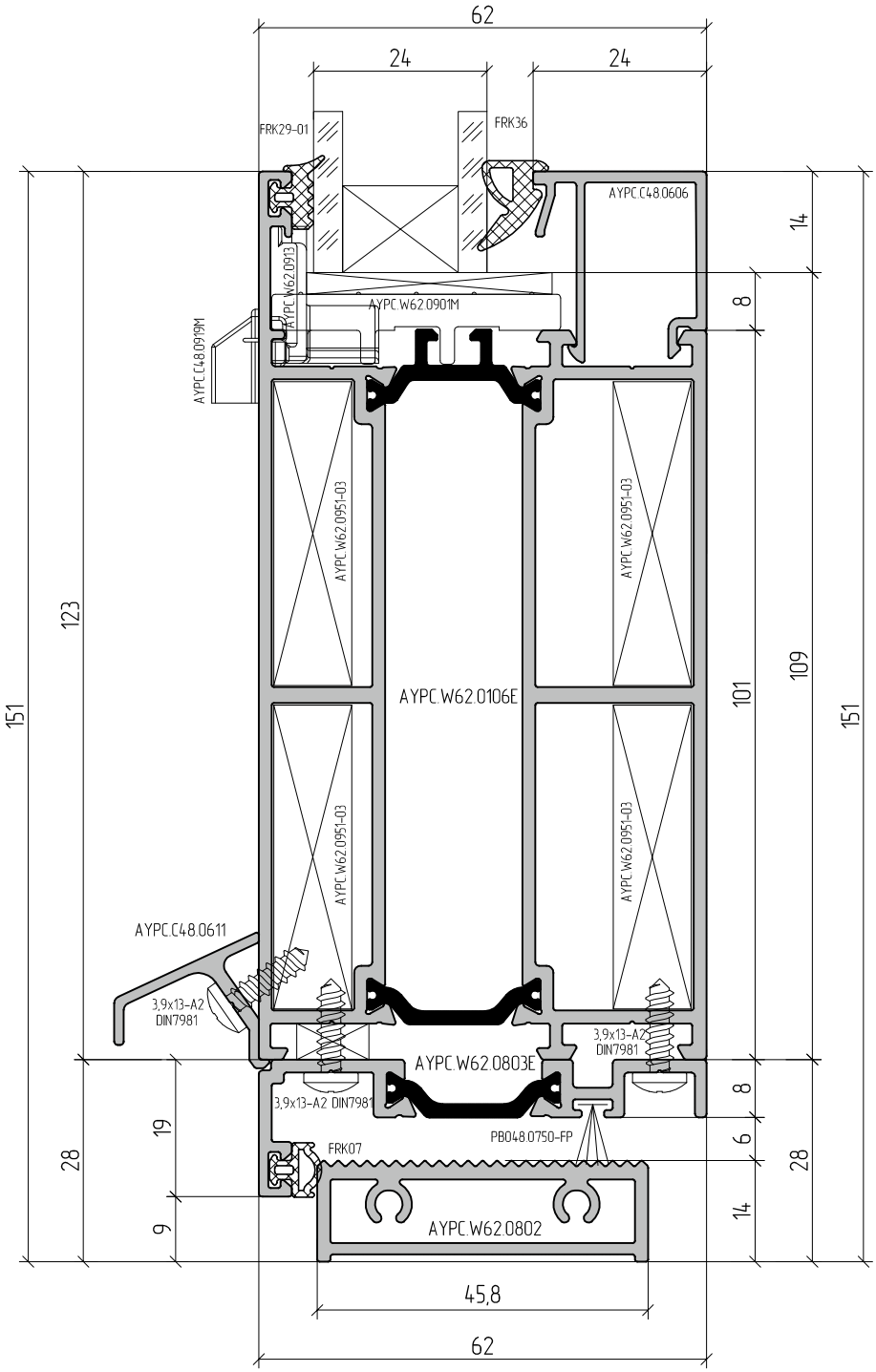
62
24
24
FRK29-01
FRK36
AYPC.C48.0606
AYPC.W62.0913
AYPC.W62.0901M
AYPC.C48.0919M
AYPC.W62.0951-03
AYPC.W62.0951-03
AYPC.W62.0106E
AYPC.W62.0951-03
AYPC.W62.0951-03
AYPC.C48.0611
3,9x13-A2 DIN7981
3,9x13-A2 DIN7981
AYPC.W62.0803E
3,9x13-A2 DIN7981
PB048.0750-FP
FRK07
AYPC.W62.0802
45,8
62
151
123
28
19
9
14
8
101
109
151
8
6
14
28

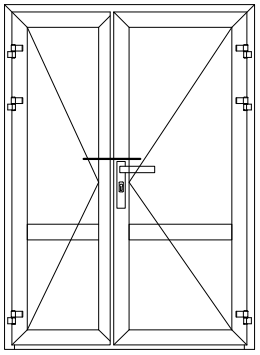

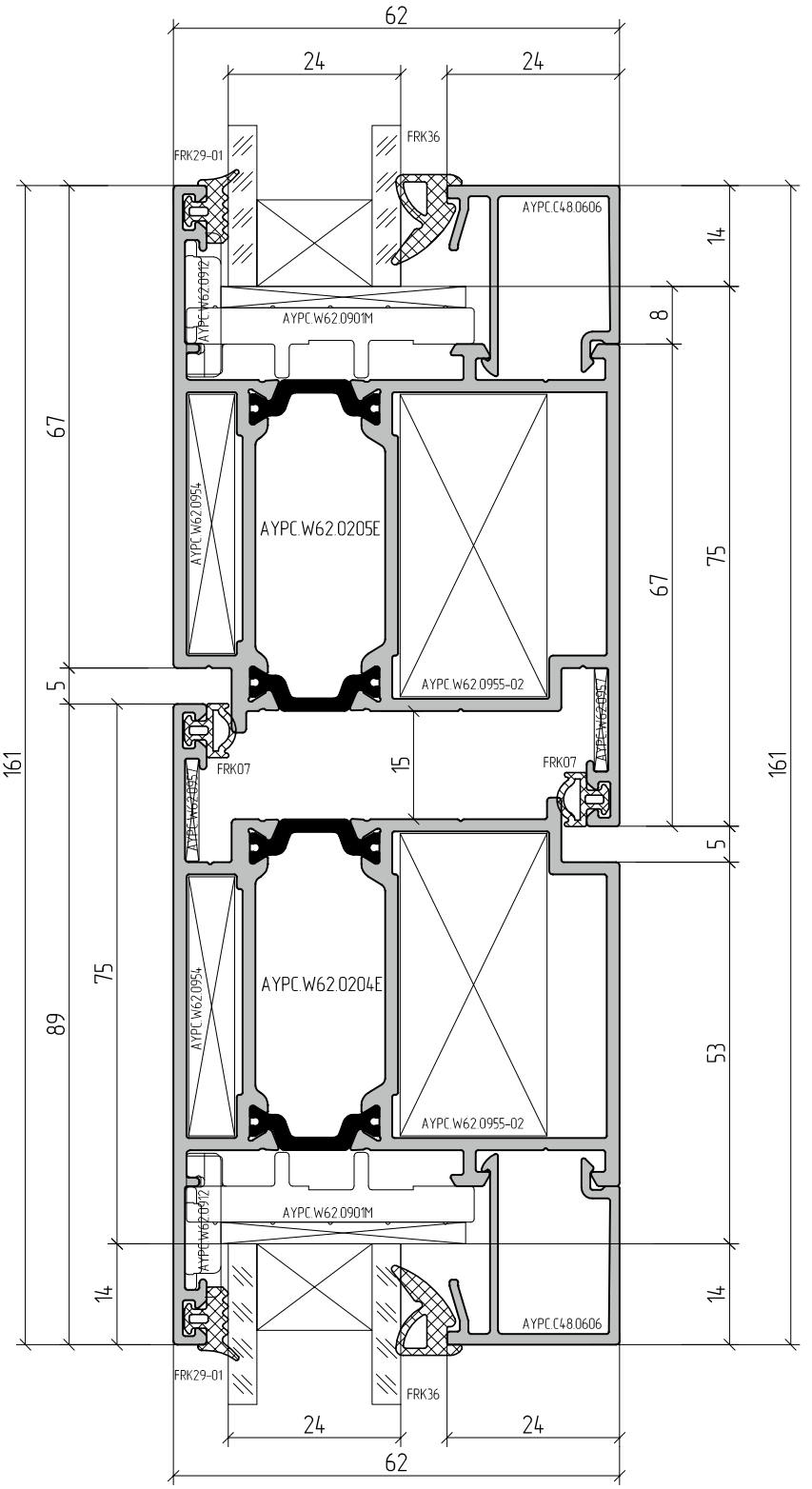
62
24
24
FRK29-01
FRK36
AYPC.C48.0606
AYPC.W62.0912
AYPC.W62.0901M
AYPC.W62.0954
AYPC.W62.0205E
AYPC.W62.0955-02
AYPC.W62.0957
FRK07
AYPC.W62.0204E
14
8
67
75
5
15
161
89
53

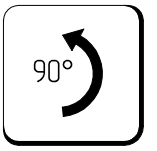
90°

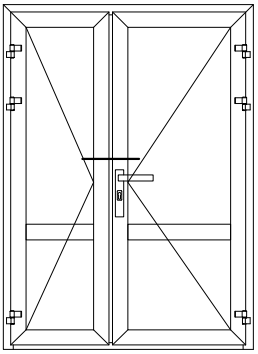

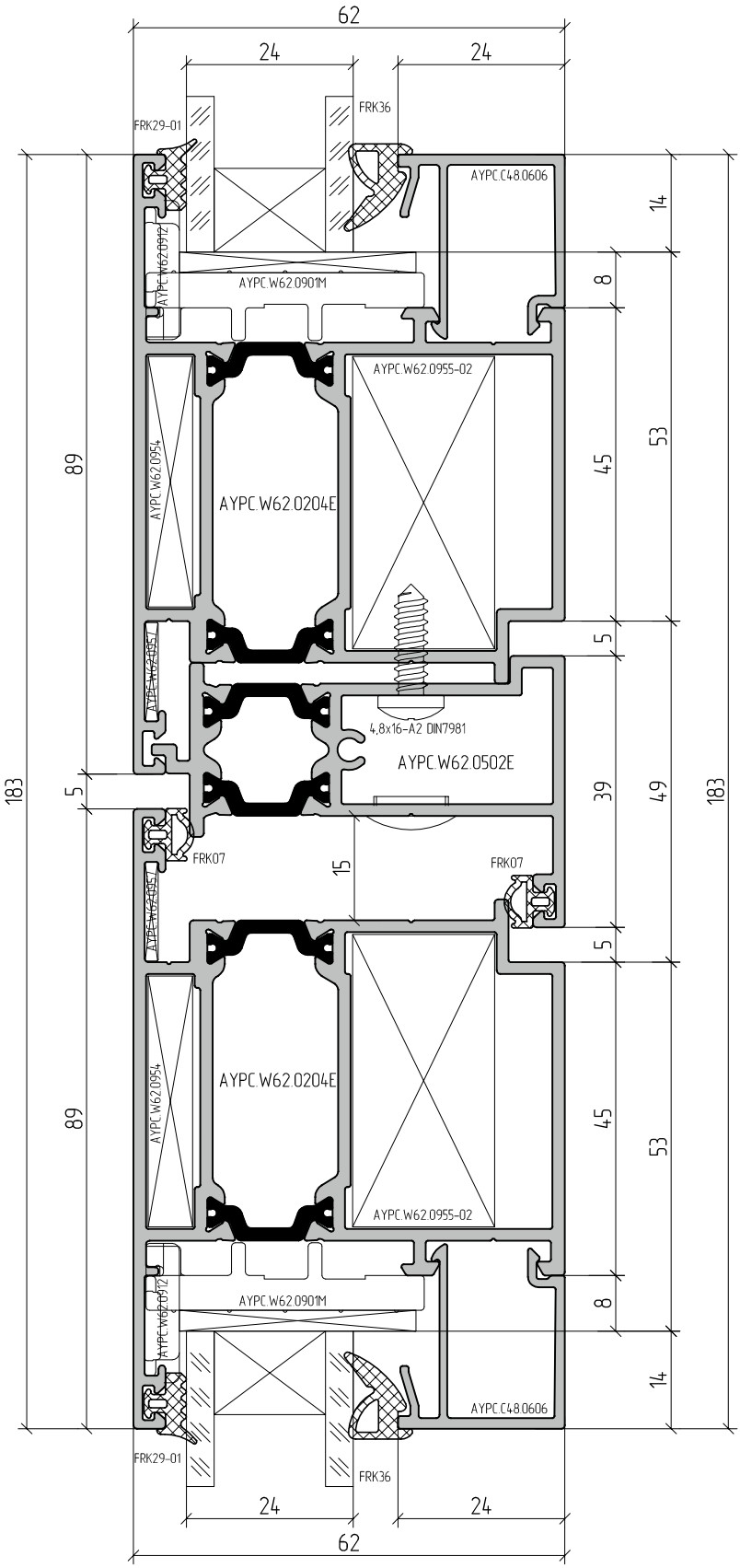
62
24
24
FRK29-01
FRK36
AYPC.C48.0606
AYPC.W62.0912
AYPC.W62.0901M
AYPC.W62.0955-02
AYPC.W62.0954
AYPC.W62.0204E
AYPC.W62.0957
4,8x16-A2 DIN7981
AYPC.W62.0502E
FRK07
FRK07
AYPC.W62.0957
AYPC.W62.0954
AYPC.W62.0204E
AYPC.W62.0955-02
AYPC.W62.0901M
AYPC.W62.0912
AYPC.C48.0606
FRK29-01
FRK36
24
24
62
183
89
89
5
15
5
5
14
8
45
53
39
49
45
53
8
14
183

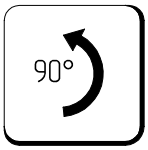
90°

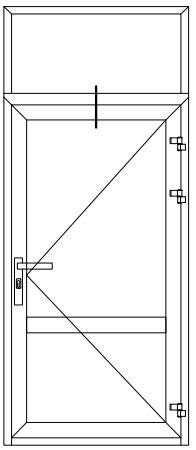

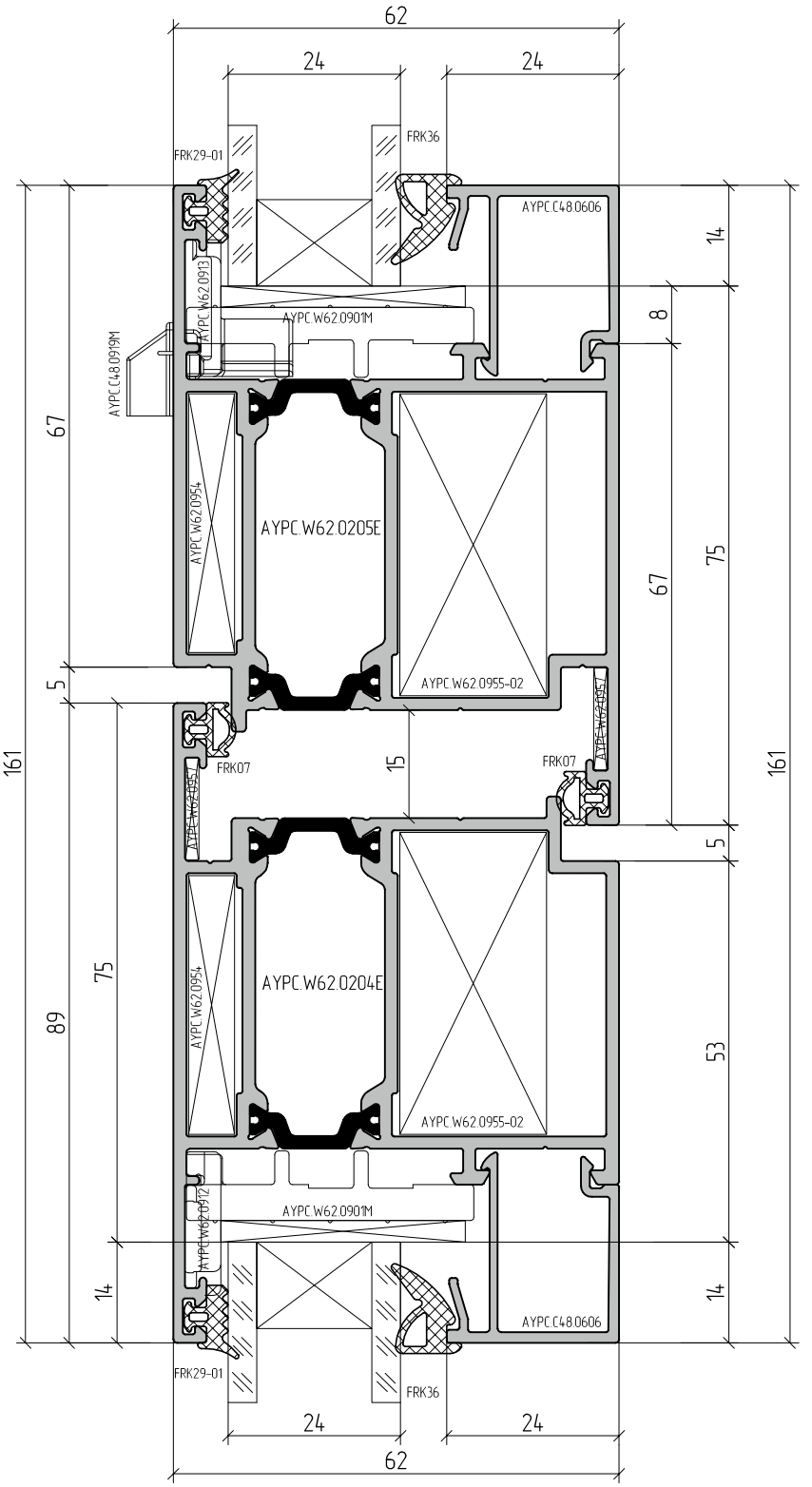
62
24
24
FRK29-01
FRK36
AYPC.C48.0606
14
8
AYPC.W62.0913
AYPC.W62.0901M
AYPC.C48.0919M
67
AYPC.W62.0954
AYPC.W62.0205E
AYPC.W62.0955-02
75
67
5
161
FRK07
15
FRK07
AYPC.W62.0957
AYPC.W62.0957
161
5
75
89
AYPC.W62.0954
AYPC.W62.0204E
AYPC.W62.0955-02
53
AYPC.W62.0901M
AYPC.W62.0912
14
14
AYPC.C48.0606
FRK29-01
FRK36
24
24
62

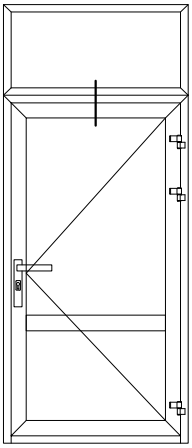

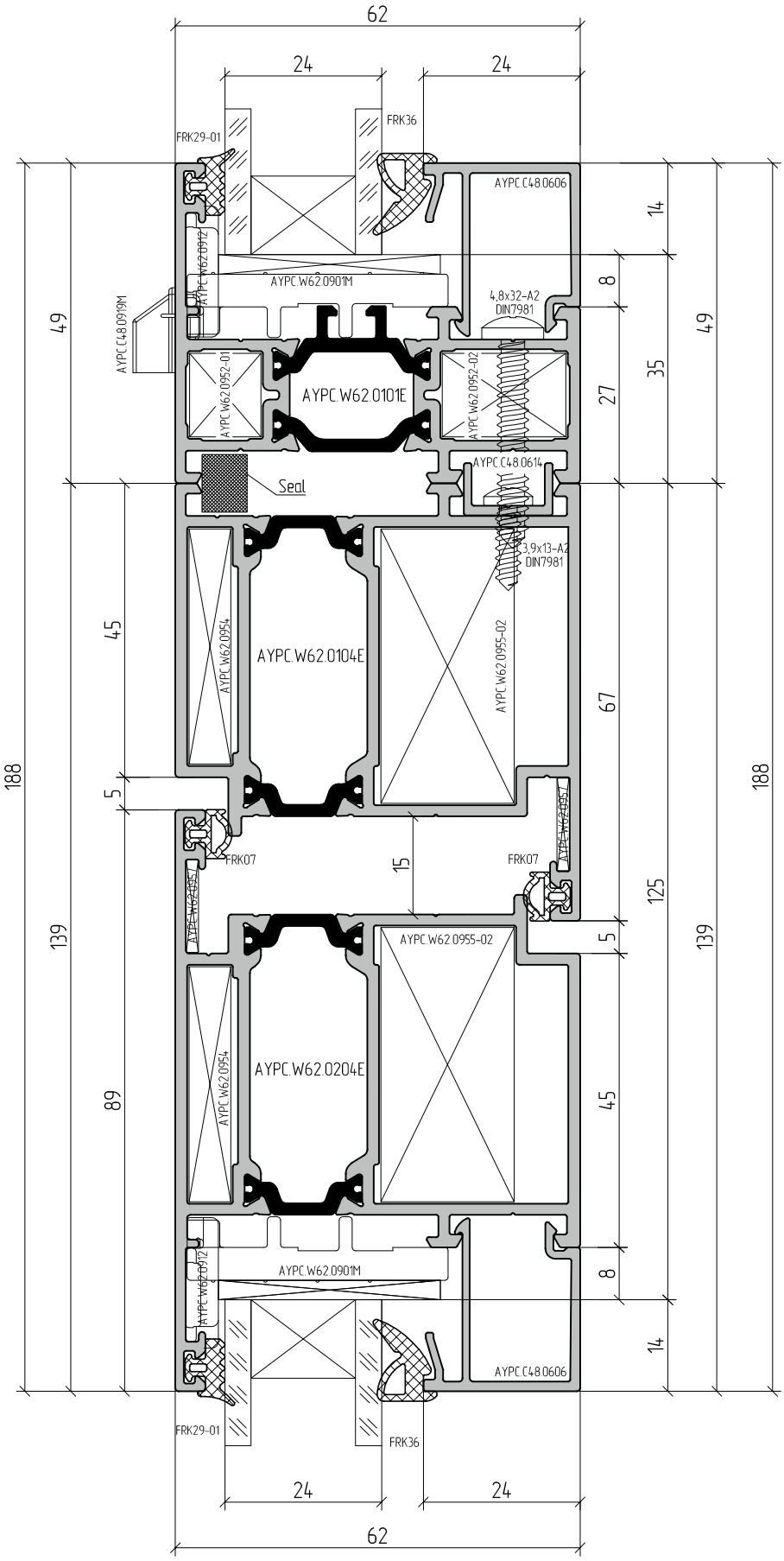
62
24
24
FRK29-01
FRK36
AYPC.C48.0606
AYPC.W62.0912
AYPC.W62.0901M
AYPC.C48.0919M
4,8x32-A2
DIN7981
AYPC.W62.0952-01
AYPC.W62.0101E
AYPC.W62.0952-02
AYPC.C48.0614
Seal
3,9x13-A2
DIN7981
AYPC.W62.0954
AYPC.W62.0104E
AYPC.W62.0955-02
FRK07
AYPC.W62.0957
AYPC.W62.0204E
14
8
35
27
49
67
45
5
15
125
139
188
89

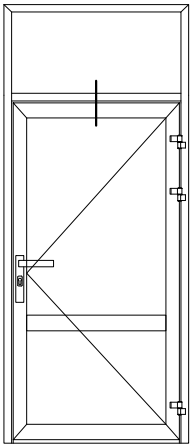

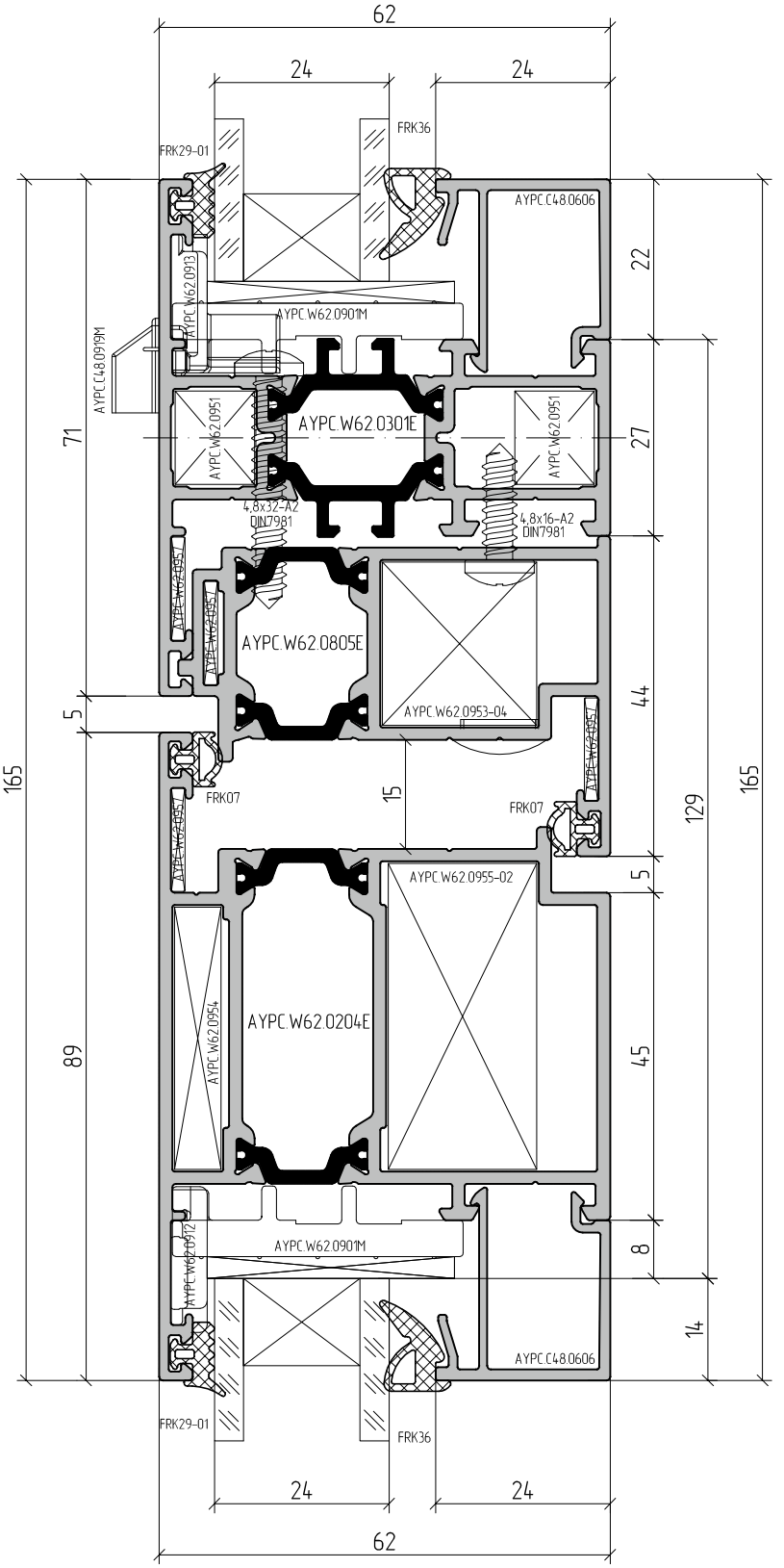
62
24
24
FRK29-01
FRK36
AYPC.C48.0606
AYPC.W62.0913
AYPC.W62.0901M
AYPC.C48.0919M
AYPC.W62.0951
AYPC.W62.0301E
AYPC.W62.0951
4,8x32-A2
DIN7981
4,8x16-A2
DIN7981
AYPC.W62.0957
AYPC.W62.0957
AYPC.W62.0805E
AYPC.W62.0953-04
AYPC.W62.0957
AYPC.W62.0957
FRK07
FRK07
AYPC.W62.0955-02
AYPC.W62.0954
AYPC.W62.0204E
AYPC.W62.0912
AYPC.W62.0901M
AYPC.C48.0606
FRK29-01
FRK36
24
24
62
165
89
71
5
15
5
22
27
44
45
8
14
129
165

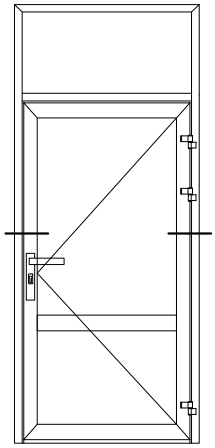

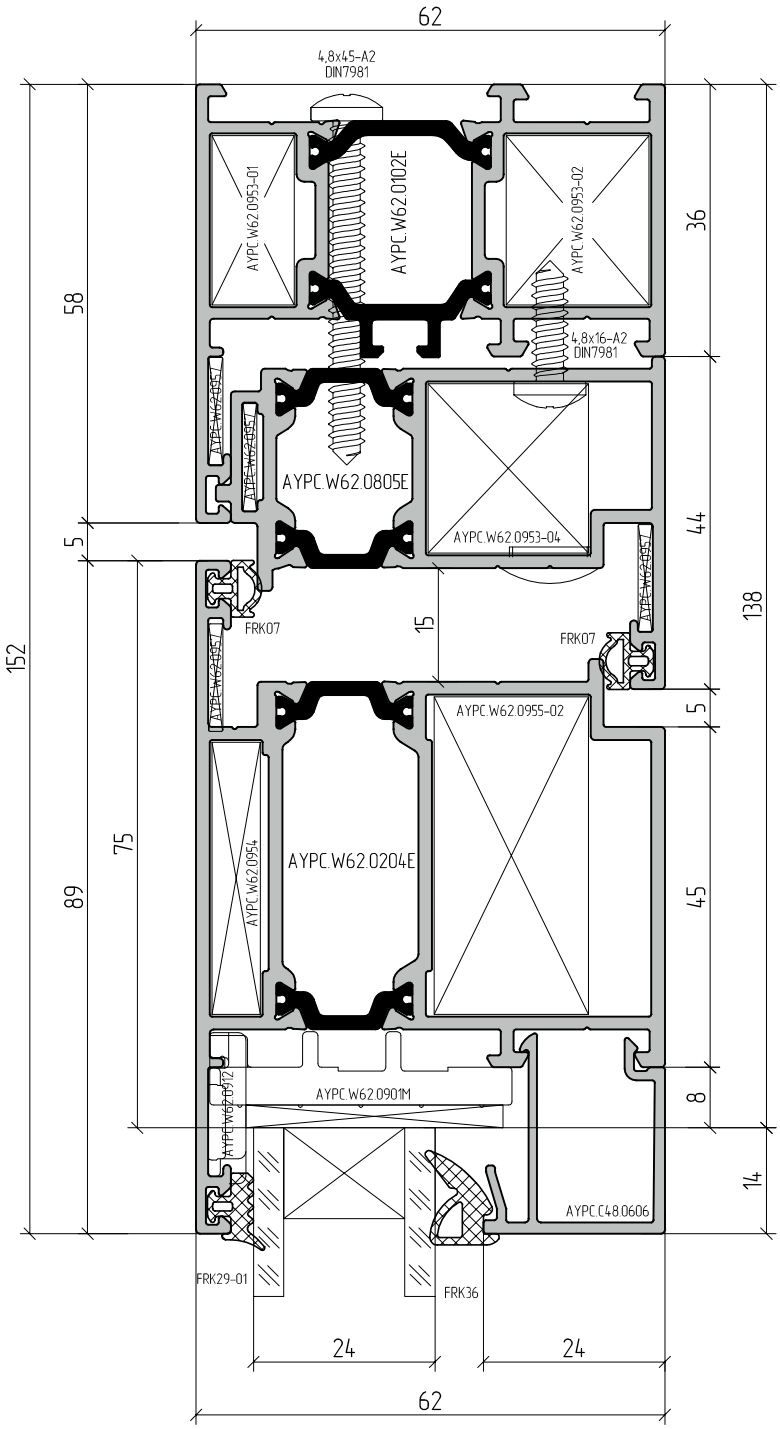
62
4,8x45-A2
DIN7981
AYPC.W62.0953-01
AYPC.W62.0102E
AYPC.W62.0953-02
4,8x16-A2
DIN7981
AYPC.W62.0805E
AYPC.W62.0953-04
FRK07
FRK07
AYPC.W62.0955-02
AYPC.W62.0954
AYPC.W62.0204E
AYPC.W62.0901M
AYPC.W62.0912
AYPC.C48.0606
FRK29-01
FRK36
24
24
62
152
89
75
58
5
15
36
44
138
5
45
8
14

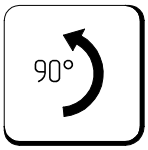
90°

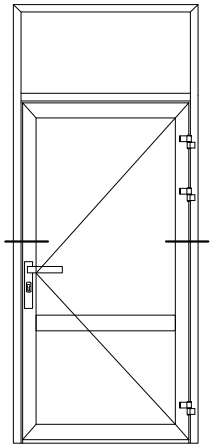

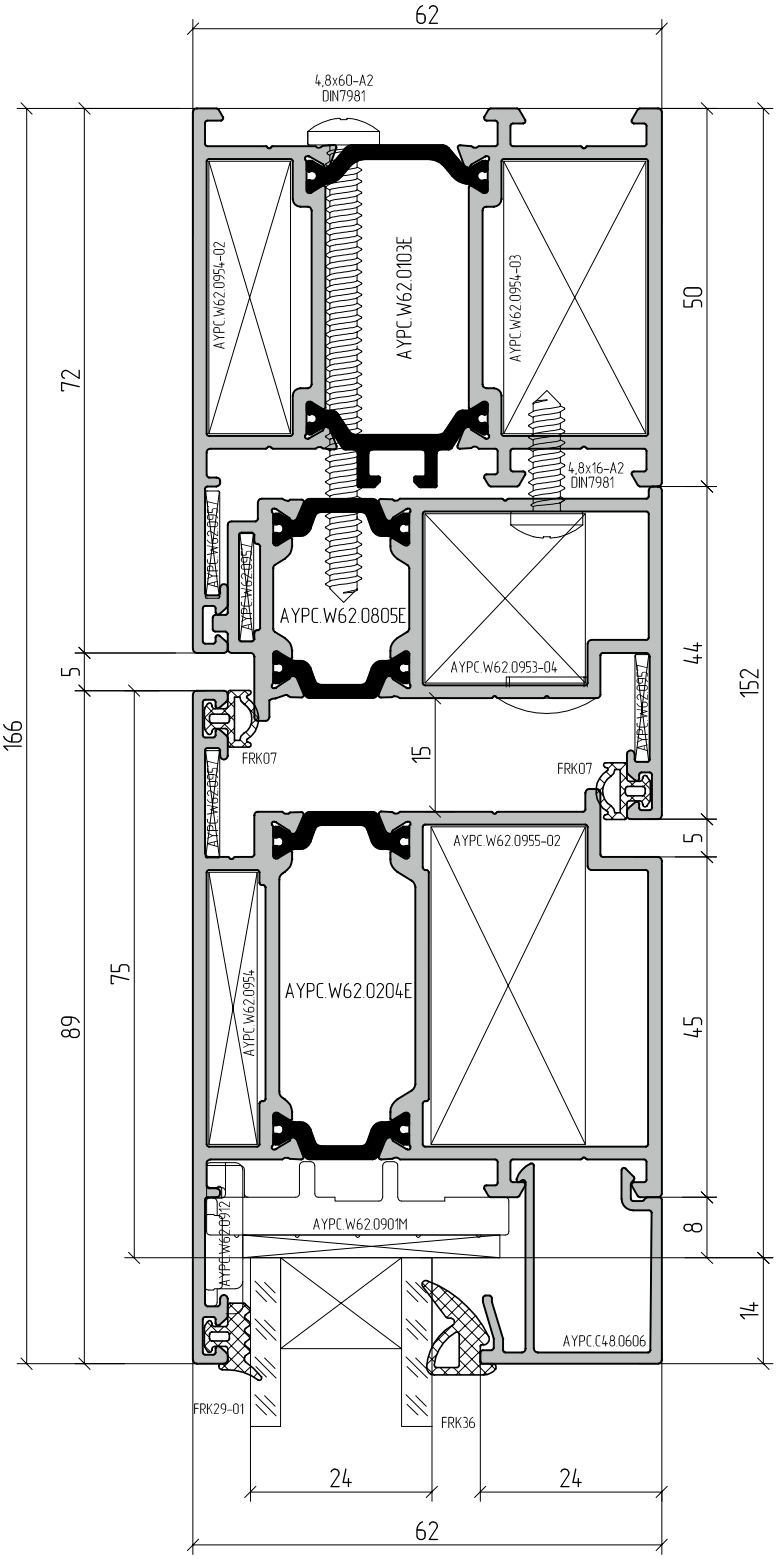
62
4,8x60-A2
DIN7981
AYPC.W62.0954-02
AYPC.W62.0103E
AYPC.W62.0954-03
4,8x16-A2
DIN7981
AYPC.W62.0957
AYPC.W62.0957
AYPC.W62.0805E
AYPC.W62.0953-04
AYPC.W62.0957
FRK07
FRK07
AYPC.W62.0957
AYPC.W62.0955-02
AYPC.W62.0954
AYPC.W62.0204E
AYPC.W62.0901M
AYPC.W62.0972
AYPC.C48.0606
FRK29-01
FRK36
24
24
62
166
89
75
72
5
15
50
44
152
5
45
8
14

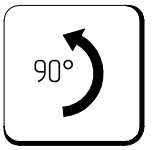
90°

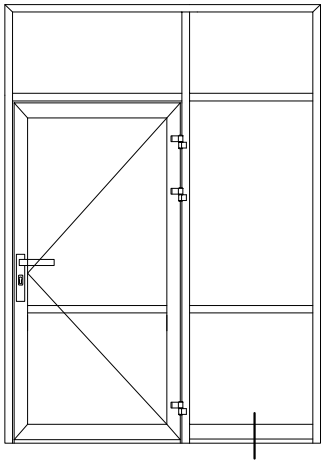

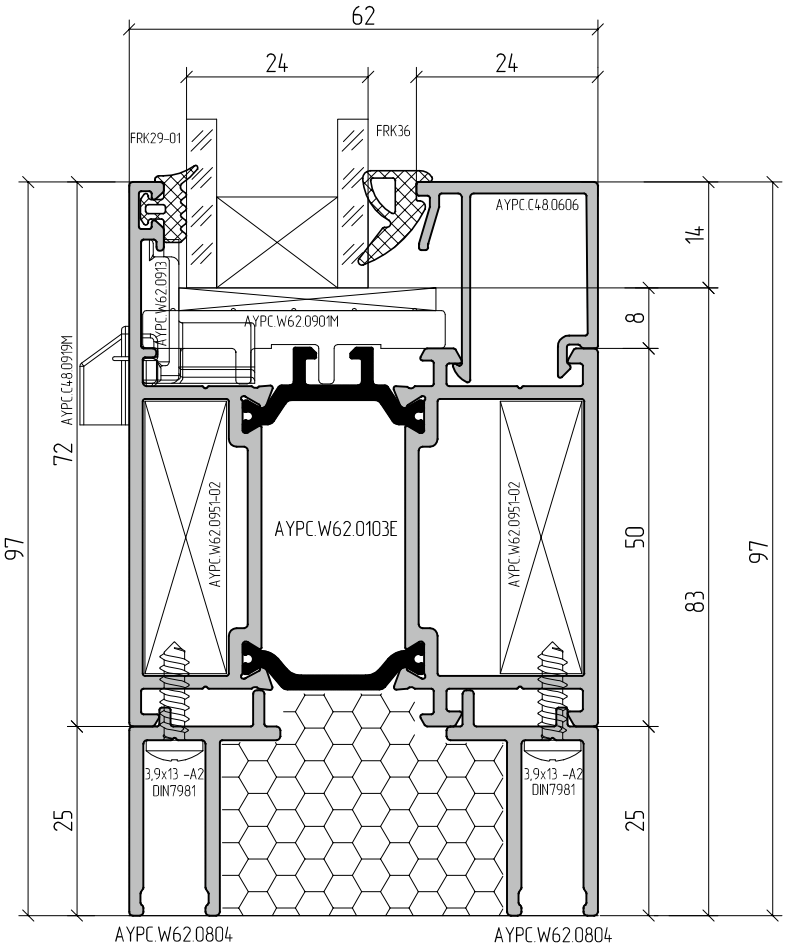
62
24
24
FRK29-01
FRK36
AYPC.C48.0606
14
AYPC.W62.0913
AYPC.W62.0901M
8
AYPC.C48.0919M
72
97
AYPC.W62.0951-02
AYPC.W62.0103E
AYPC.W62.0951-02
50
83
97
3,9x13 -A2
DIN7981
3,9x13 -A2
DIN7981
25
25
AYPC.W62.0804
AYPC.W62.0804

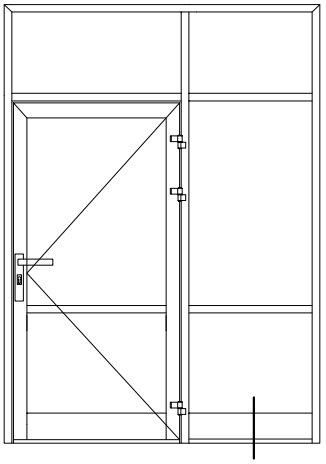

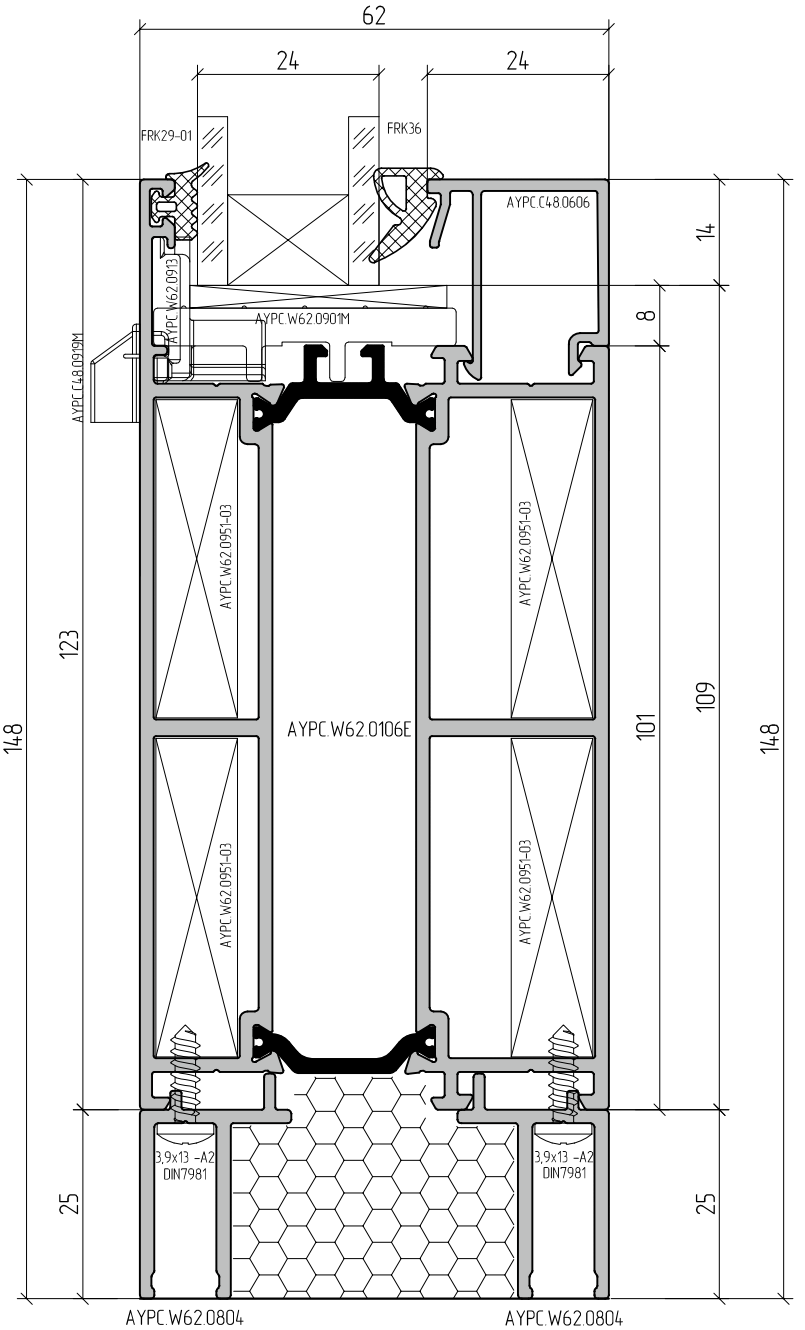
62
24
24
FRK29-01
FRK36
AYPC.C48.0606
AYPC.W62.0913
AYPC.W62.0901M
AYPC.C48.0919M
AYPC.W62.0951-03
AYPC.W62.0951-03
AYPC.W62.0106E
AYPC.W62.0951-03
AYPC.W62.0951-03
3,9x13 -A2
DIN7981
3,9x13 -A2
DIN7981
AYPC.W62.0804
AYPC.W62.0804
14
8
148
123
101
109
148
25
25

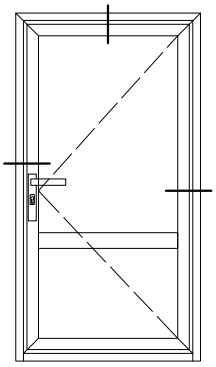

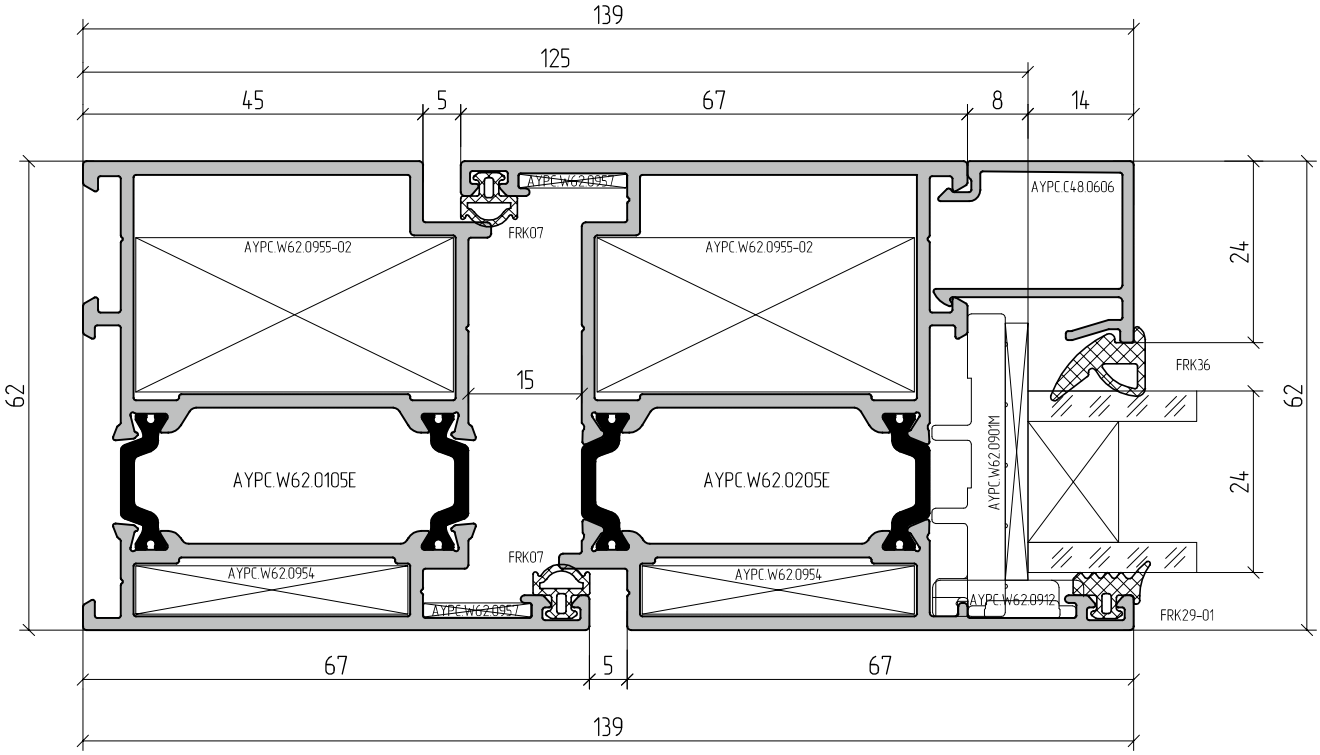
139
125
45
5
67
8
14
AYPC.W62.0957
AYPC.C48.0606
FRK07
AYPC.W62.0955-02
AYPC.W62.0955-02
24
FRK36
62
15
62
AYPC.W62.0901M
AYPC.W62.0105E
AYPC.W62.0205E
24
FRK07
AYPC.W62.0954
AYPC.W62.0954
AYPC.W62.0957
AYPC.W62.0912
FRK29-01
67
5
67
139

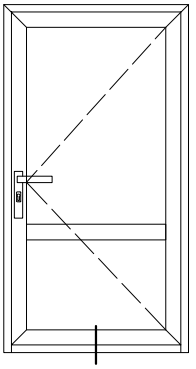

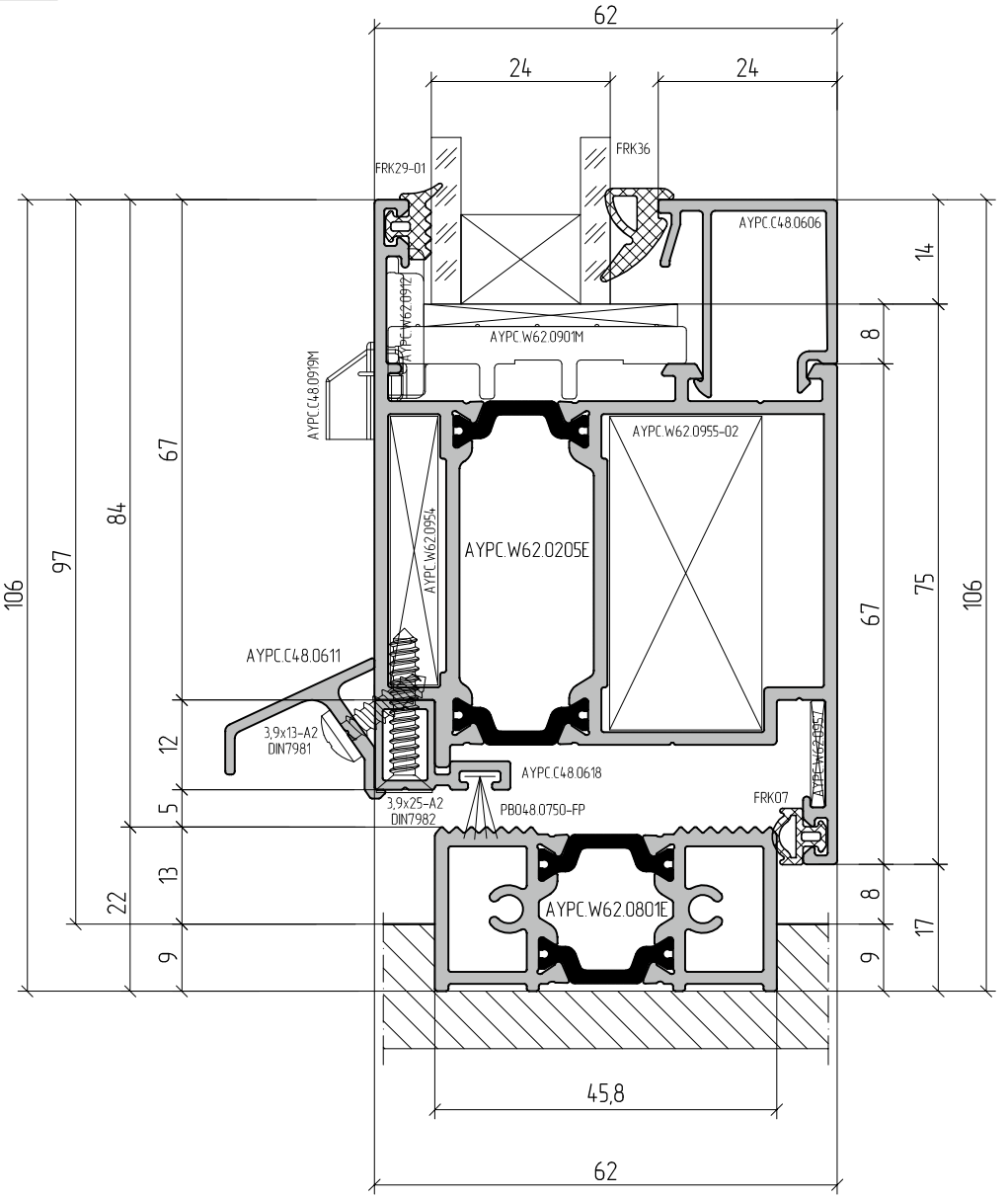
62
24
24
FRK29-01
FRK36
AYPC.C48.0606
AYPC.W62.0912
AYPC.W62.0901M
AYPC.C48.0919M
AYPC.W62.0955-02
AYPC.W62.0954
AYPC.W62.0205E
AYPC.C48.0611
3,9x13-A2
DIN7981
AYPC.C48.0618
3,9x25-A2
DIN7982
PB048.0750-FP
FRK07
AYPC.W62.0957
AYPC.W62.0801E
106
97
84
67
12
5
13
22
9
14
8
75
67
106
8
17
9
45,8
62

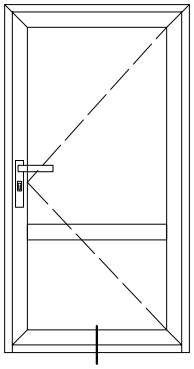

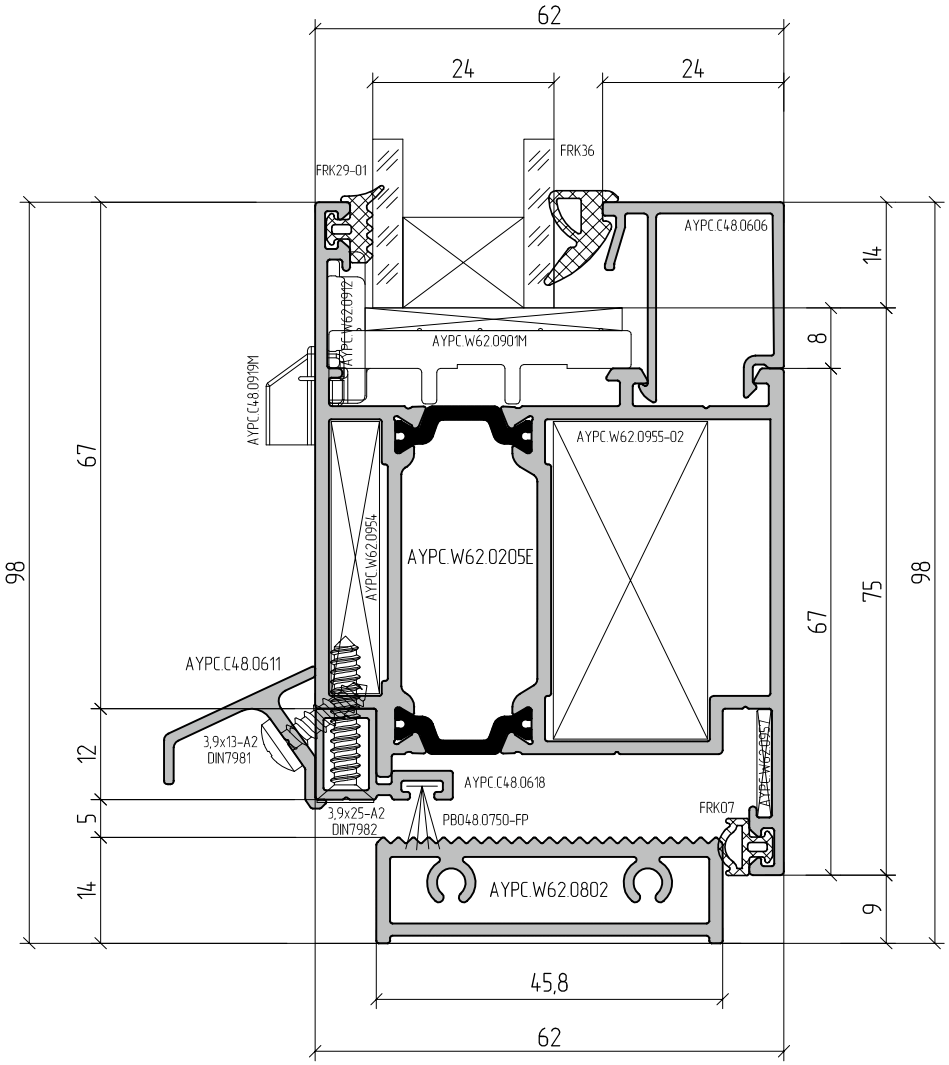
62
24
24
FRK29-01
FRK36
AYPC.C48.0606
AYPC.W62.0912
AYPC.W62.0901M
AYPC.C48.0919M
AYPC.W62.0955-02
AYPC.W62.0954
AYPC.W62.0205E
AYPC.C48.0611
3,9x13-A2
DIN7981
AYPC.C48.0618
3,9x25-A2
DIN7982
PB048.0750-FP
FRK07
AYPC.W62.0957
AYPC.W62.0802
98
67
12
5
14
14
8
67
75
98
9
45,8
62

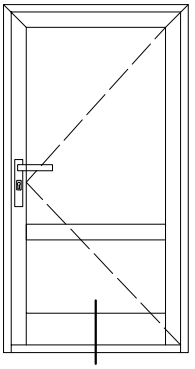

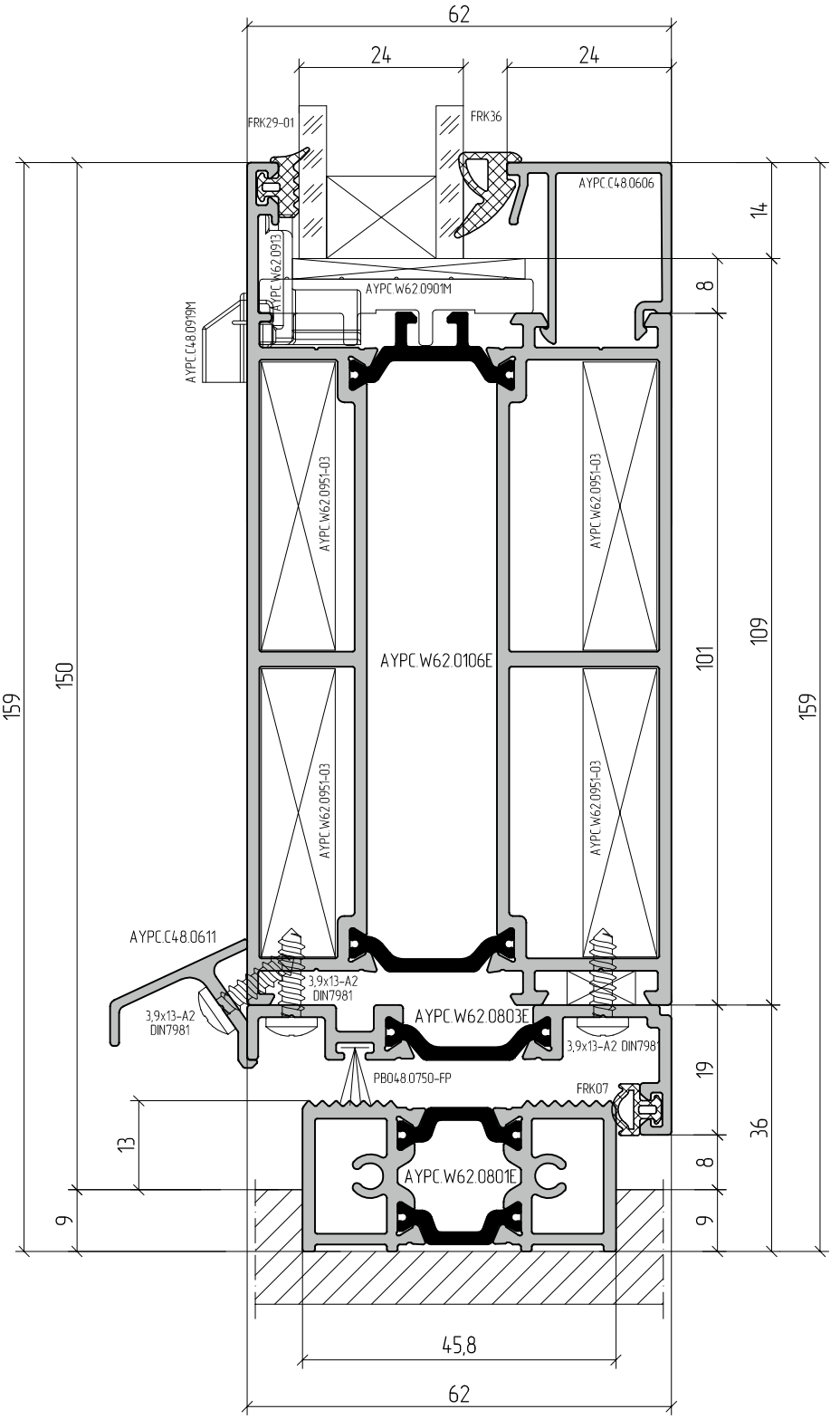
62
24
24
FRK29-01
FRK36
AYPC.C48.0606
AYPC.W62.0913
AYPC.W62.0901M
AYPC.C48.0919M
AYPC.W62.0951-03
AYPC.W62.0951-03
AYPC.W62.0106E
AYPC.W62.0951-03
AYPC.W62.0951-03
AYPC.C48.0611
3,9x13-A2 DIN7981
3,9x13-A2 DIN7981
AYPC.W62.0803E
3,9x13-A2 DIN7981
PB048.0750-FP
FRK07
AYPC.W62.0801E
14
8
109
101
159
159
150
19
36
8
9
9
13
45,8
62

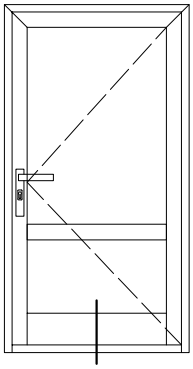

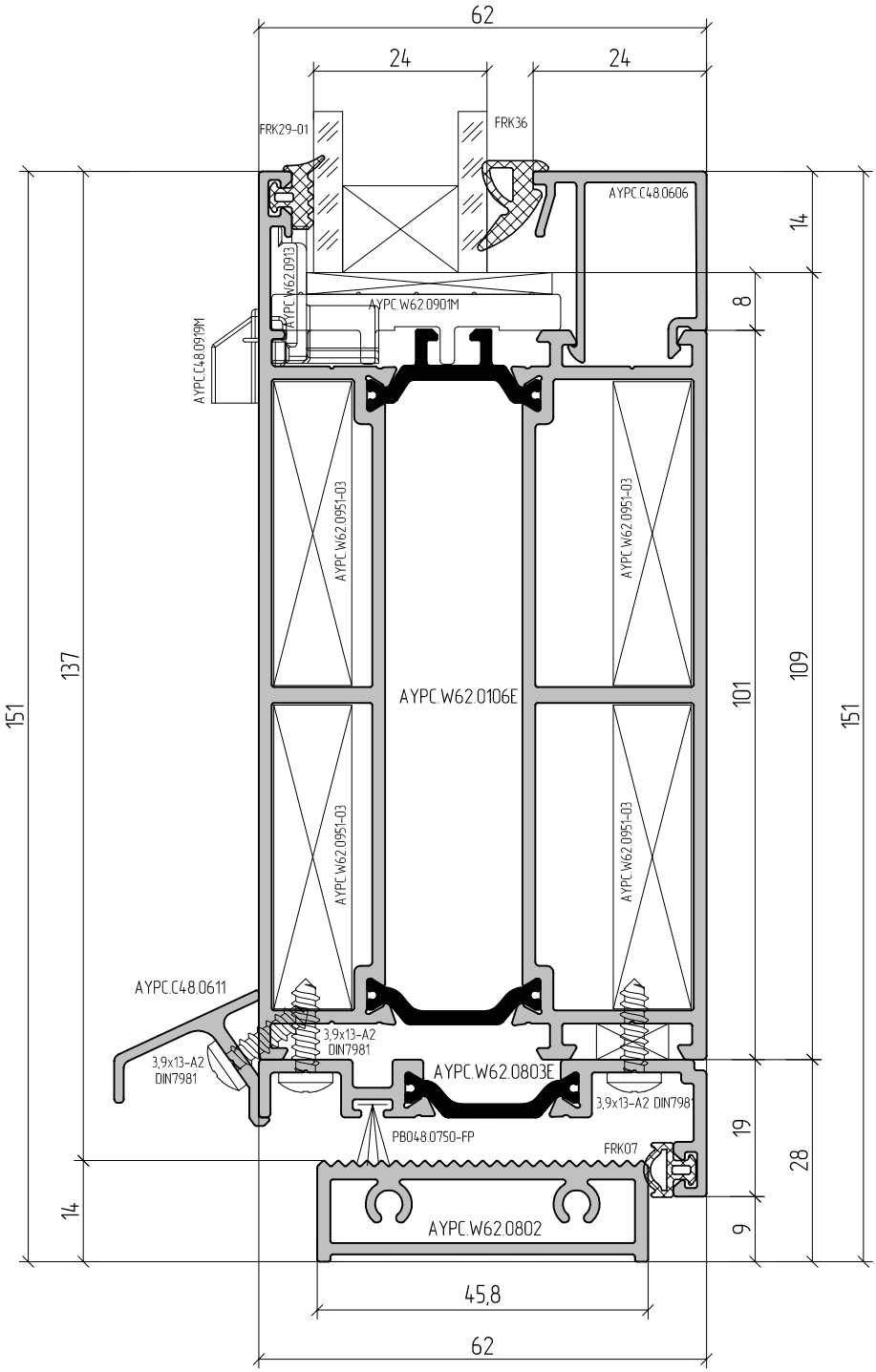
62
24
24
FRK29-01
FRK36
AYPC.C48.0606
AYPC.W62.0913
AYPC.W62.0901M
AYPC.C48.0919M
AYPC.W62.0951-03
AYPC.W62.0951-03
AYPC.W62.0106E
AYPC.W62.0951-03
AYPC.W62.0951-03
AYPC.C48.0611
3,9x13-A2
DIN7981
3,9x13-A2
DIN7981
AYPC.W62.0803E
3,9x13-A2 DIN7981
PB048.0750-FP
FRK07
AYPC.W62.0802
45,8
62
151
137
14
14
8
101
109
151
19
28
9

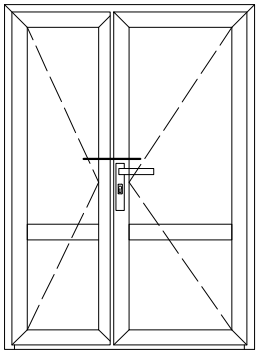

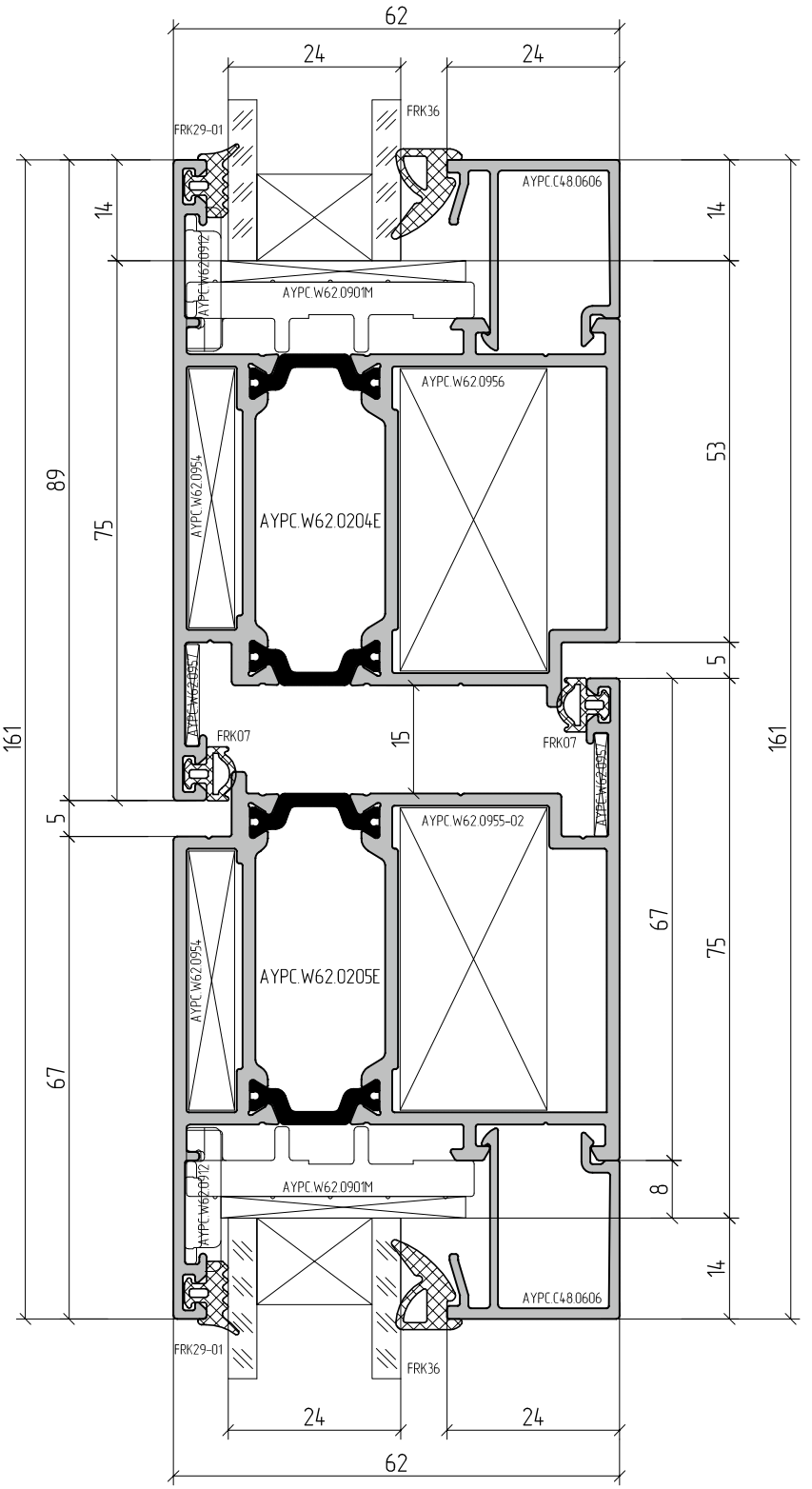
62
24
24
FRK29-01
FRK36
AYPC.C48.0606
14
14
AYPC.W62.0912
AYPC.W62.0901M
AYPC.W62.0956
AYPC.W62.0954
AYPC.W62.0204E
89
75
53
5
161
161
AYPC.W62.0957
FRK07
15
FRK07
AYPC.W62.0957
5
AYPC.W62.0955-02
AYPC.W62.0954
AYPC.W62.0205E
67
75
67
8
AYPC.W62.0912
AYPC.W62.0901M
14
AYPC.C48.0606
FRK29-01
FRK36
24
24
62

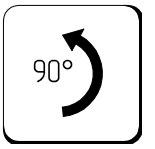
90°

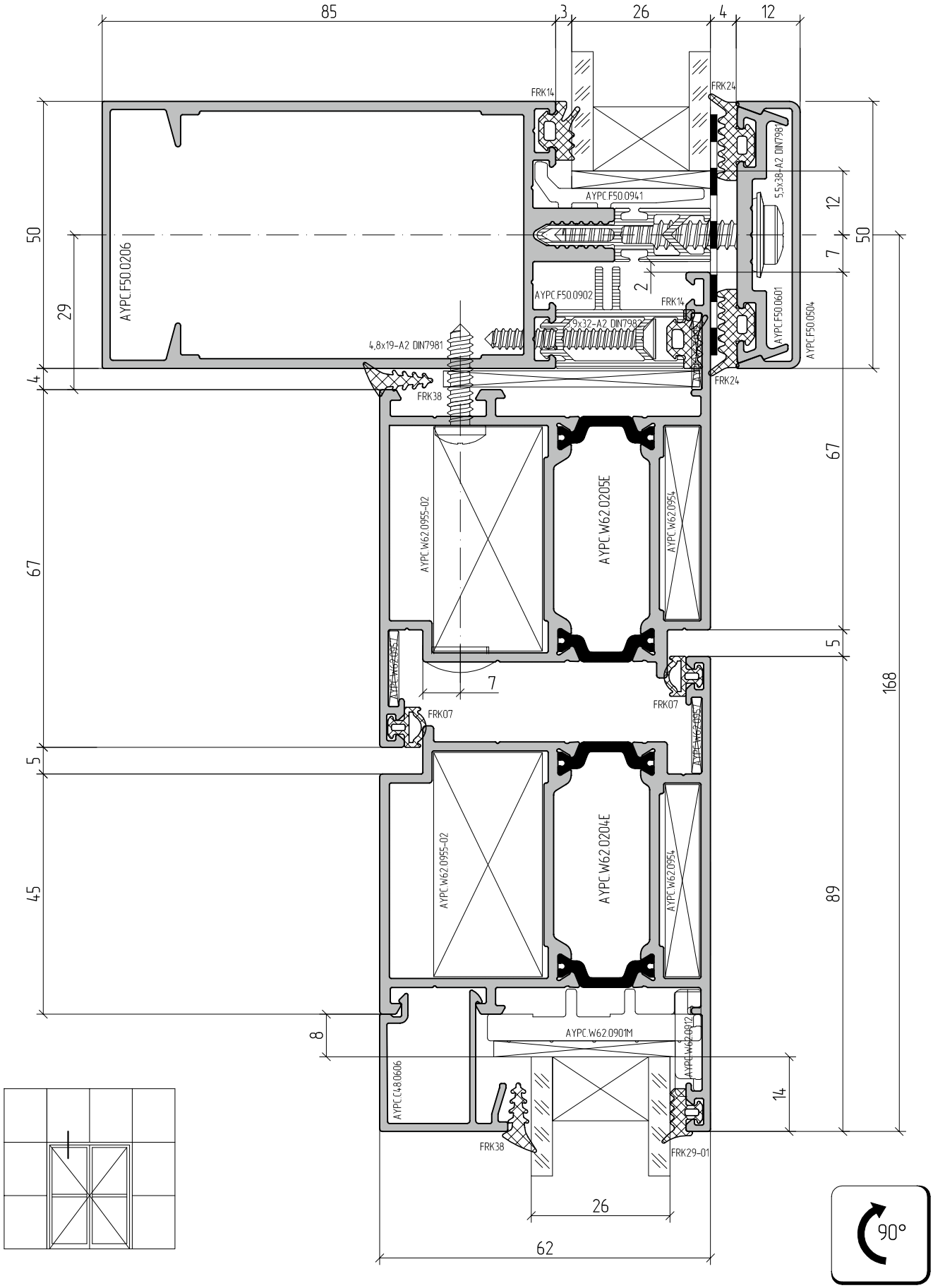
85
3
26
4
12
FRK14
FRK24
AYPC F50.0941
5,5x38-A2 DIN7987
AYPC F50.0206
AYPC F50.0902
FRK14
9x32-A2 DIN7982
4,8x19-A2 DIN7981
AYPC F50.0601
AYPC F50.0504
FRK24
FRK38
AYPC W62.0955-02
AYPC W62.0205E
AYPC W62.0954
AYPC W62.0957
FRK07
FRK07
AYPC W62.0957
AYPC W62.0955-02
AYPC W62.0204E
AYPC W62.0954
AYPC W62.0901M
AYPC W62.0872
AYPC C48.0606
FRK38
FRK29-01
50
29
4
67
5
45
8
12
7
2
67
5
168
89
14
7
26
62
90°

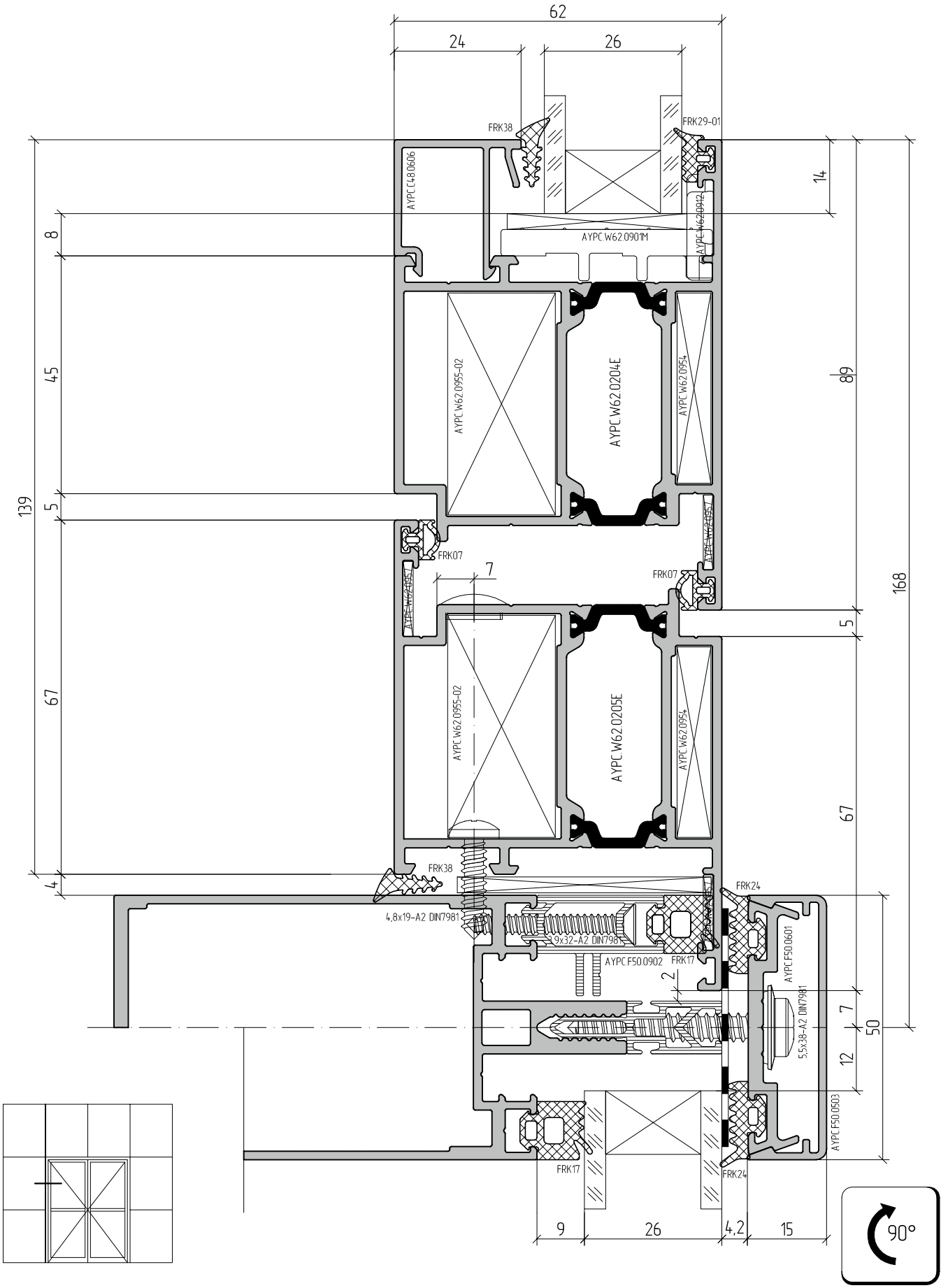
62
24
26
FRK38
FRK29-01
AYPC.C48.0606
AYPC.W62.0901M
AYPC.W62.0912
AYPC.W62.0955-02
AYPC.W62.0204E
AYPC.W62.0954
AYPC.W62.0957
FRK07
7
AYPC.W62.0205E
FRK24
4,8x19-A2 DIN7981
3,9x32-A2 DIN7981
AYPC.F50.0902
FRK17
AYPC.F50.0601
5,5x38-A2 DIN7981
AYPC.F50.0503
8
45
139
5
67
4
14
89
168
2
7
50
12
9
26
4,2
15
90°

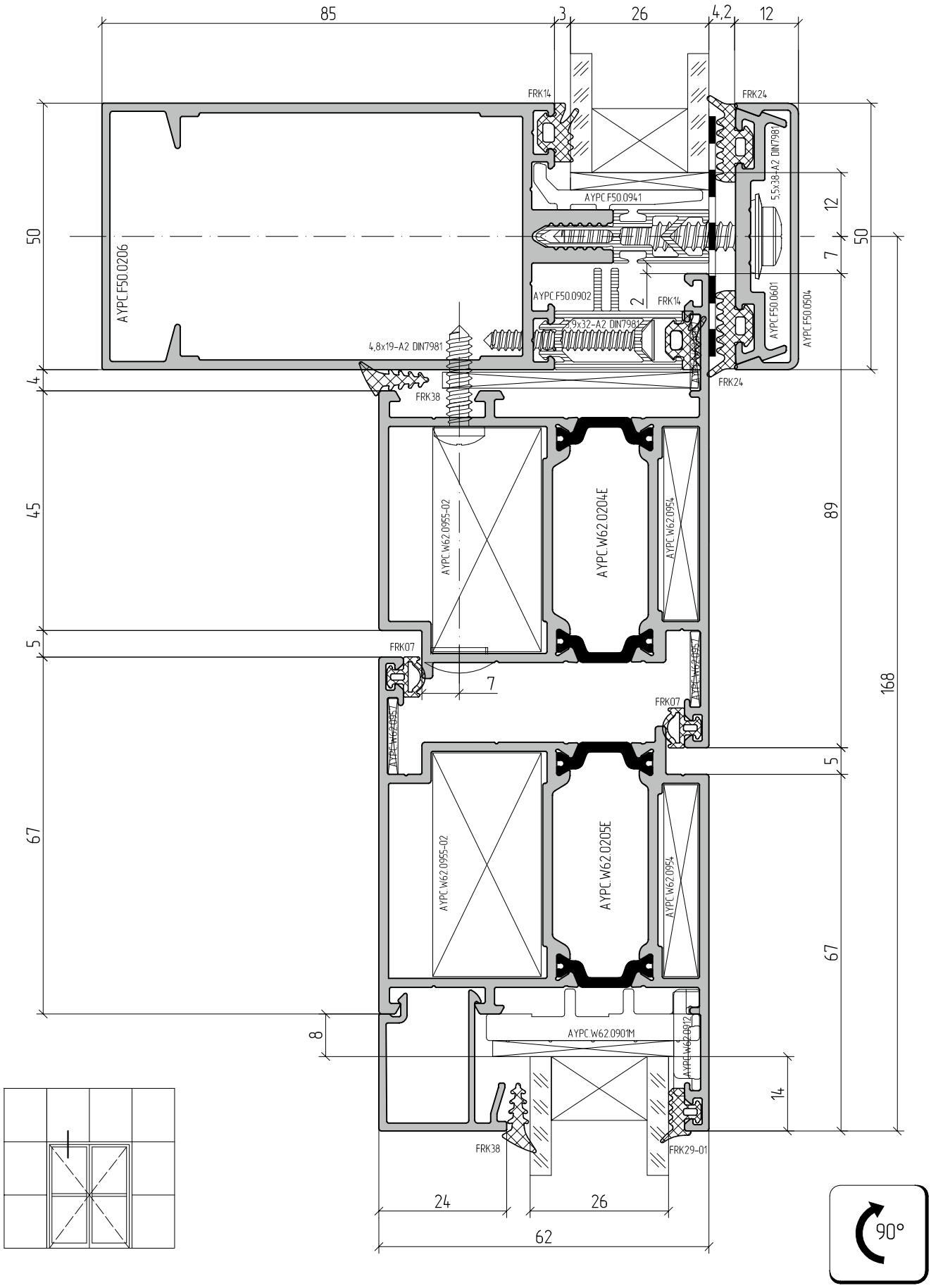
85
3
26
4,2
12
FRK14
FRK24
AYPC.F50.0941
5,5x38-A2 DIN7981
AYPC.F50.0206
AYPC.F50.0902
FRK14
AYPC.F50.0601
AYPC.F50.0504
4,8x19-A2 DIN7981
FRK38
FRK24
AYPC.W62.0955-02
AYPC.W62.0204E
AYPC.W62.0954
FRK07
FRK07
AYPC.W62.0955-02
AYPC.W62.0205E
AYPC.W62.0954
AYPC.W62.0901M
AYPC.W62.0812
FRK38
FRK29-01
50
4
45
5
67
8
12
7
2
89
5
67
14
168
24
26
62
90°

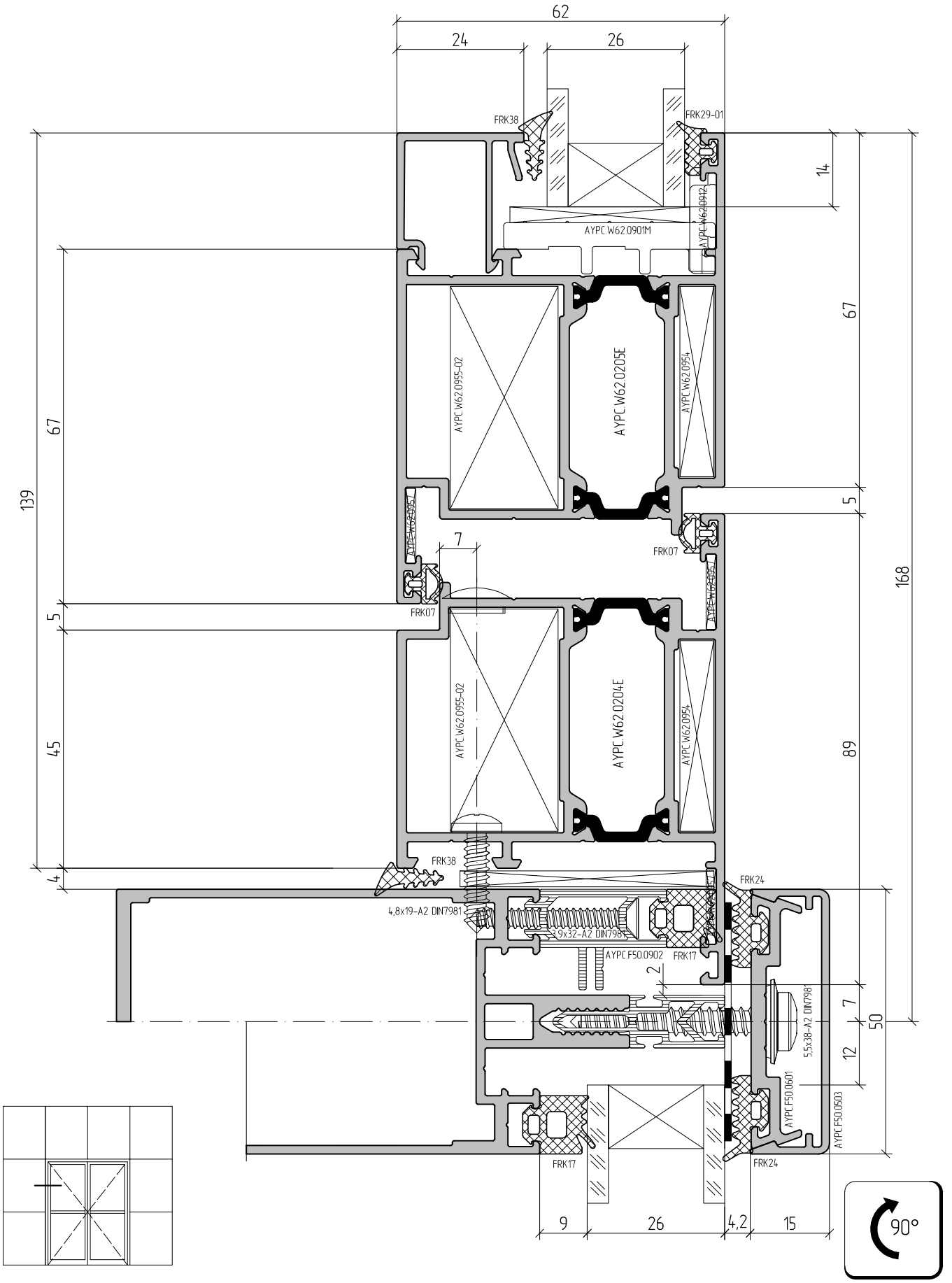
62
24
26
FRK38
FRK29-01
14
AYPC W62 0901M
AYPC W62 0912
67
AYPC W62 0955-02
AYPC W62 0205E
AYPC W62 0954
139
67
5
7
FRK07
168
5
FRK07
AYPC W62 0955-02
AYPC W62 0204E
AYPC W62 0954
45
89
FRK38
4
FRK24
4,8x19-A2 DIN7981
9x32-A2 DIN7981
AYPC F50 0902
FRK17
2
7
50
5,5x38-A2 DIN7981
12
AYPC F50 0601
AYPC F50 0503
FRK17
FRK24
9
26
4,2
15
90°

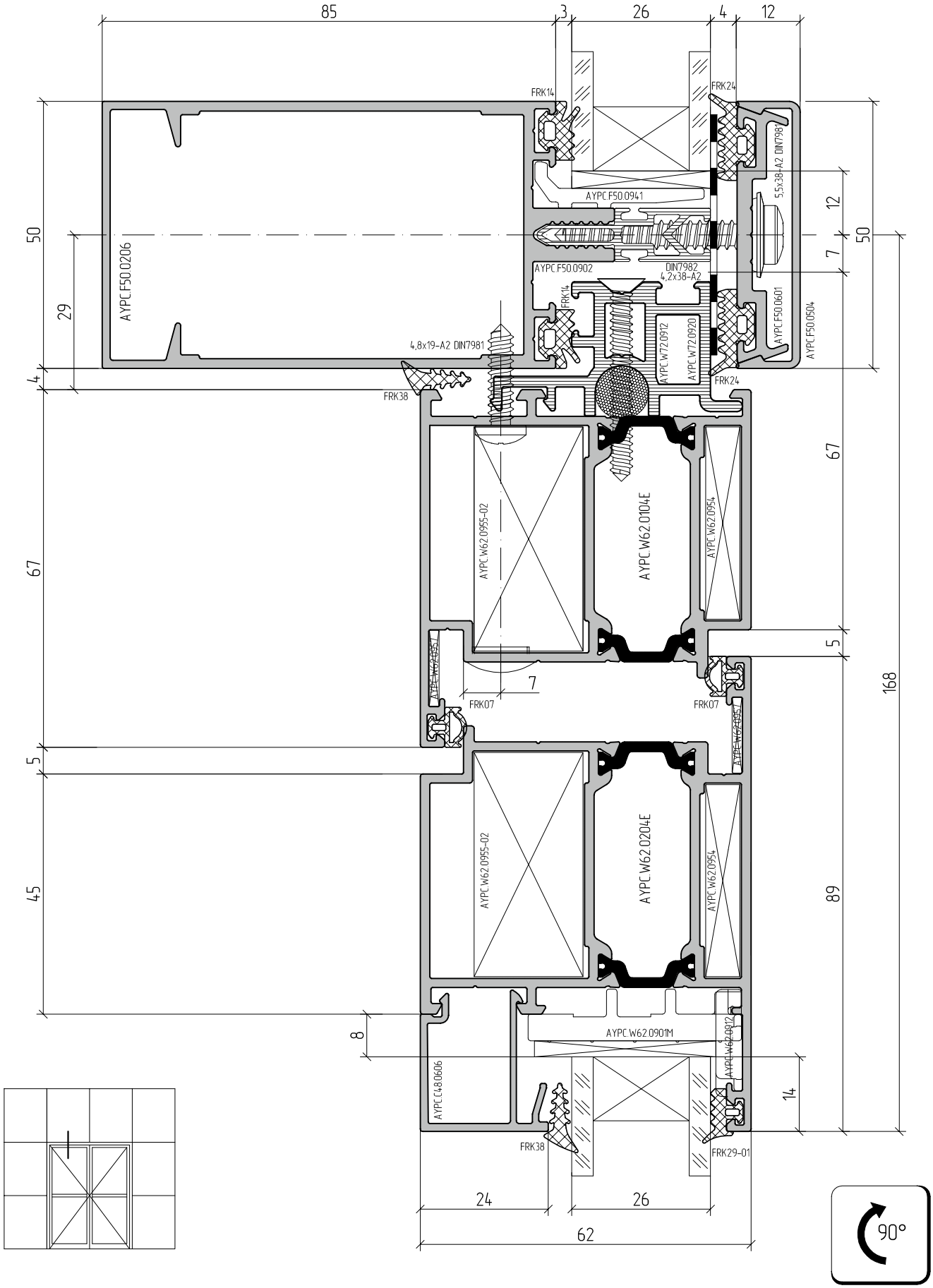
85
3
26
4
12
FRK14
FRK24
AYPC.F50.0941
5,5x38-A2 DIN7987
AYPC.F50.0206
AYPC.F50.0902
DIN7982
4,2x38-A2
FRK14
AYPC.W72.0912
AYPC.W72.0920
AYPC.F50.0601
AYPC.F50.0504
4,8x19-A2 DIN7981
FRK38
FRK24
AYPC.W62.0955-02
AYPC.W62.0104E
AYPC.W62.0954
AYPC.W62.0957
FRK07
FRK07
AYPC.W62.0957
AYPC.W62.0955-02
AYPC.W62.0204E
AYPC.W62.0954
AYPC.W62.0901M
AYPC.W62.0912
AYPC.C48.0606
FRK38
FRK29-01
50
29
4
67
5
45
8
12
7
50
67
5
168
89
14
24
26
62
90°

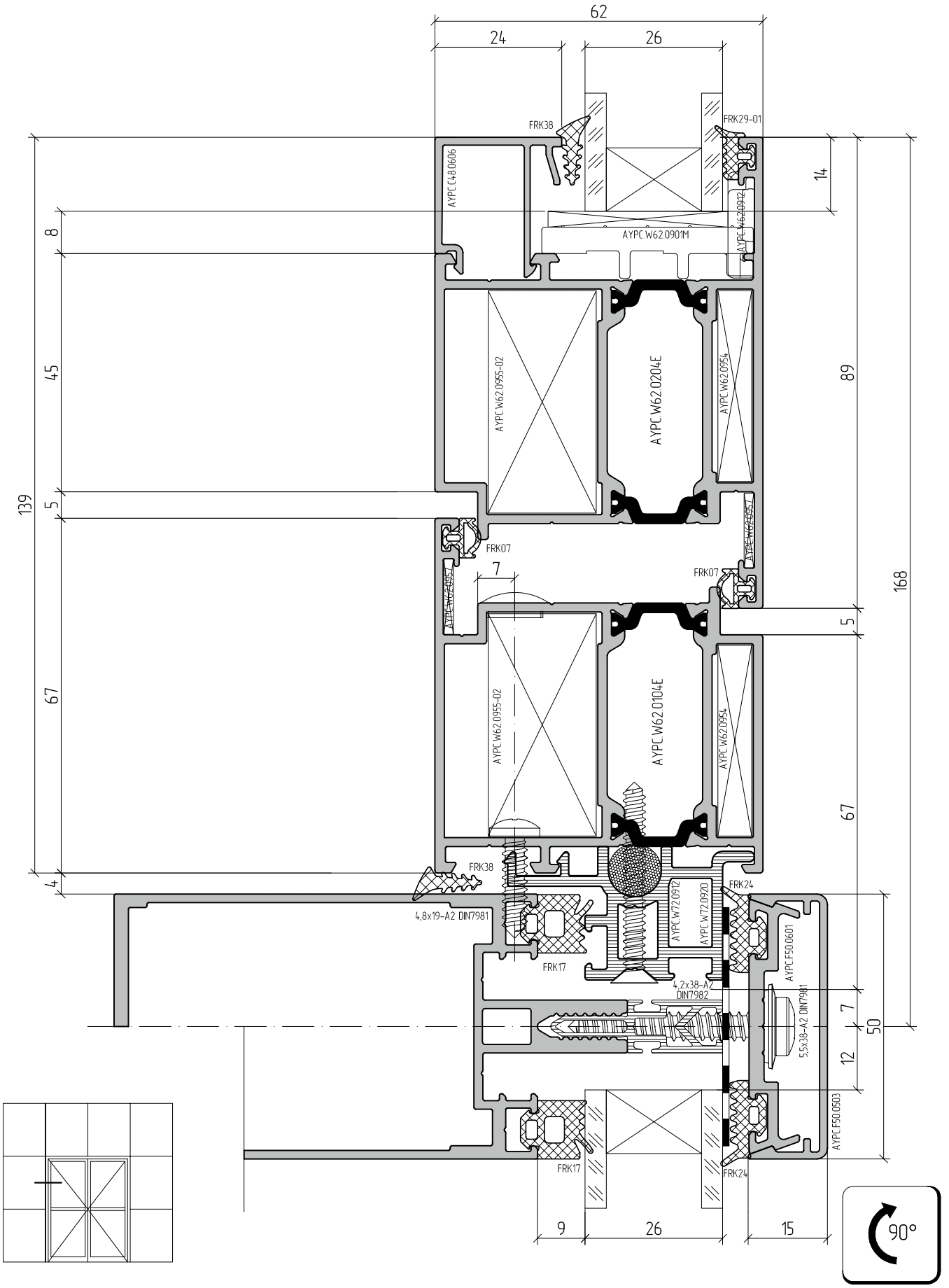
62
24
26
FRK38
FRK29-01
AYPC.C48.0606
AYPC.W62.0901M
AYPC.W62.0912
AYPC.W62.0955-02
AYPC.W62.0204E
AYPC.W62.0954
AYPC.W62.0957
FRK07
7
AYPC.W62.0104E
FRK38
4,8x19-A2 DIN7981
FRK17
AYPC.W72.0912
AYPC.W72.0920
FRK24
AYPC.F50.0601
4,2x38-A2 DIN7982
5,5x38-A2 DIN7981
AYPC.F50.0503
9
26
15
139
8
45
5
67
4
14
89
168
50
12
90°

ALUTECH ALT W62
WINDOW
AND DOOR SYSTEM

EXAMPLE OF STANDARD SYSTEM CALCULATION

09

Example of tilt and turn window calculation

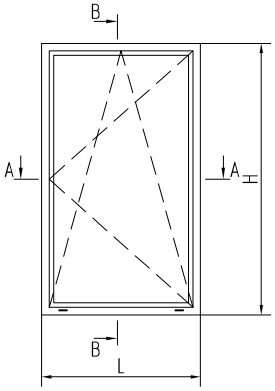

B–B

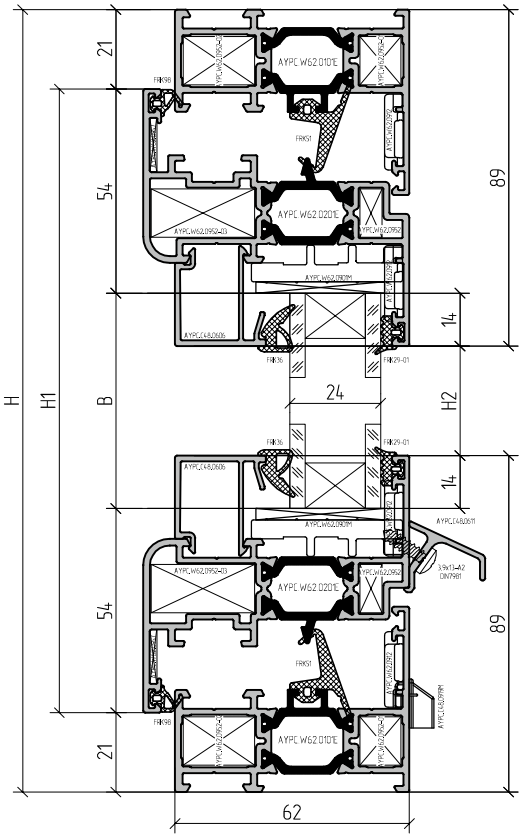

A–A

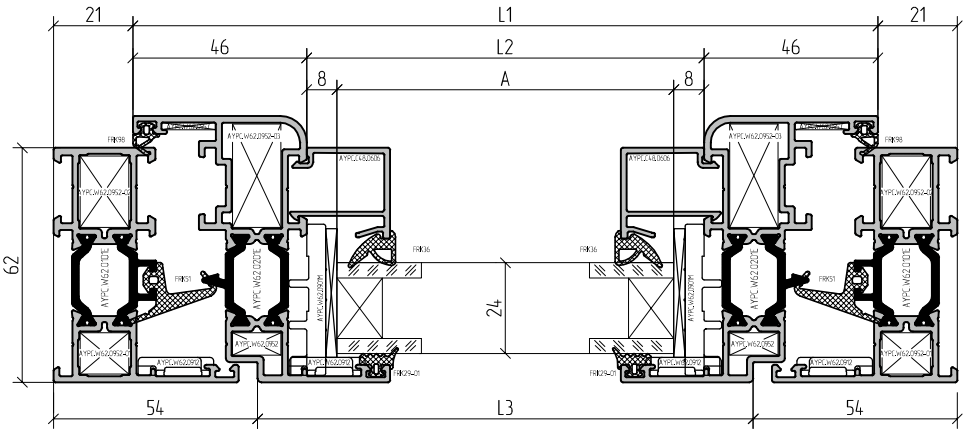

24 mm infill unit	
A=L1–108, B=H1–108	1

Example of tilt and turn window calculation

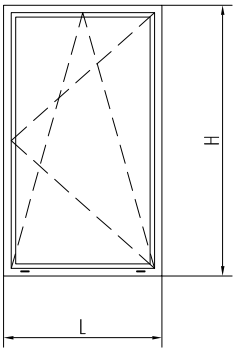

Article	Name / Image			1....
Profile				
AYPC.W62.0101E	Frame profile		L	2
			H	2
AYPC.W62.0201E	Sash profile		L1=L-42	2
			H1=H-42	2
AYPC.C48.0611	Drain profile		L3=L-108	1
AYPC.C48.0612	Rod profile		-	
AYPC.C48.0606	Glass bead profile		L2=L1-92	2
			H2=H1-136	2

Article	Name / Image		1....	
Accessories				
FRK51	Rubber gasket	L1x2+H1x2	1	
FRK52	Rubber corner		4	
FRK29-01	Rubber gasket	Ax2+Bx2	1	
FRK170	Rubber corner		4	
FRK36	Rubber gasket	Ax2+Bx2	1	
FRK98	Rubber gasket	L1x2+H1x2	1	
FRK101	Rubber gasket	L=100mm	2*	
FRK101	Rubber gasket	L1x2+H1x2	1	See p.05.05
AYPC.W62.0901M	Bearing support		6	
100x32x1 (3)	Leveling support		6 (6)	
AYPC.C48.0919M	Drain plug		2	
AYPC.W62.0952	Clamping corner		4	
AYPC.W62.0952-03	Clamping corner		4	
AYPC.W62.0952-01	Clamping corner		4	
AYPC.W62.0952-02	Clamping corner		4	
AYPC.W62.0912	Plastic corner		8	
AYPC.W62.0957	Leveling corner		4	
3,9x13-A2 DIN7981	Self-tapping screw	L3/250		

1. Select articles of glass bead profiles and gaskets depending on infill unit thickness (see part 06 – Table of glazing).
2. The dimensions and quantities of the AYPC.C48.0612 rod profile are determined by the type of hardware and sash dimensions (L1 and H1).
3. * The quantity of FRK101 gasket depends on the type of opening and hinges quantity.

Example of combined window calculation

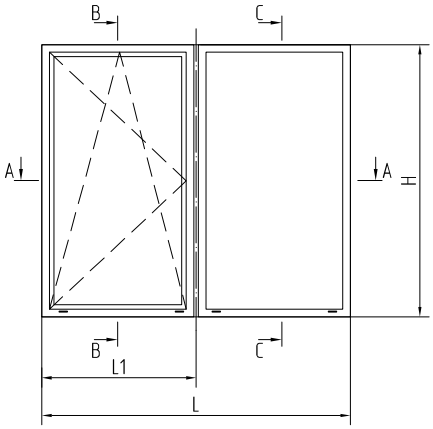

B–B

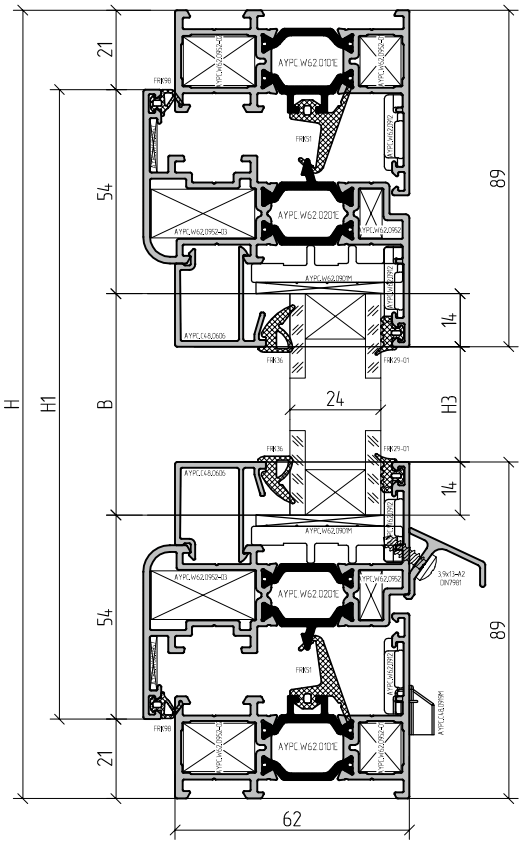

C–C

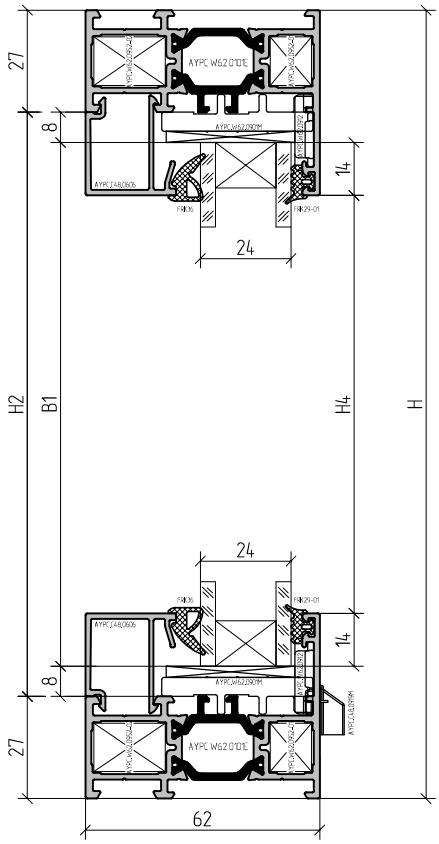

A–A

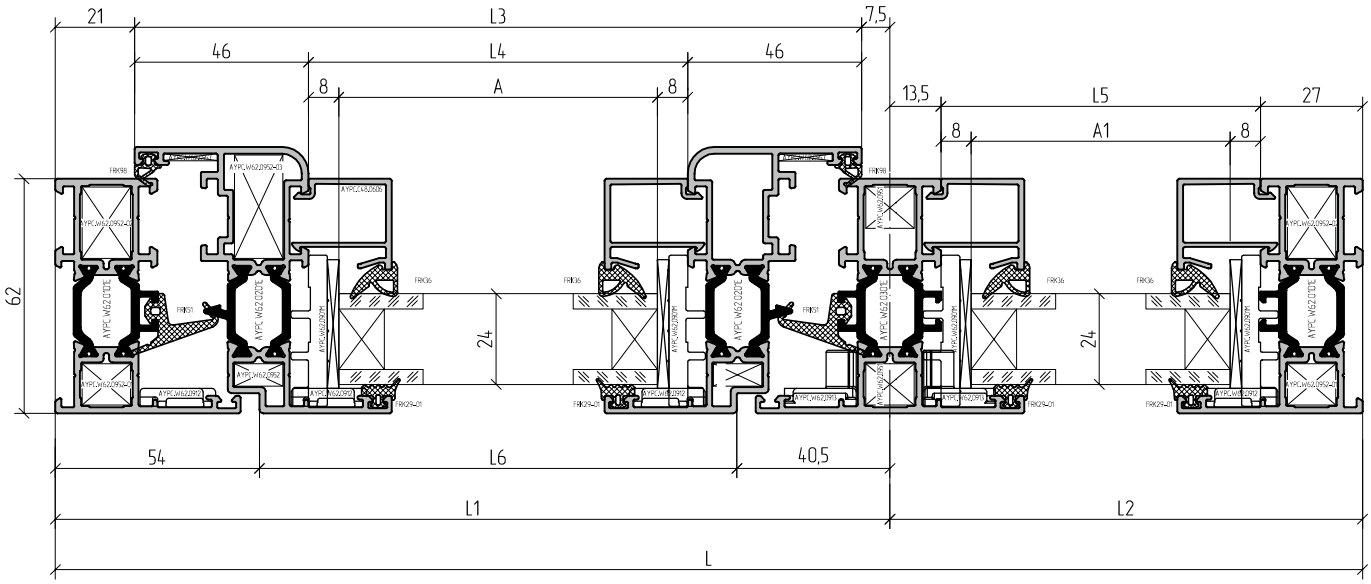

24 mm infill unit

A=L3–108 ; B=H1–108	1
A1=L2–56,5 ; B1=H–70	1

Example of combined window calculation

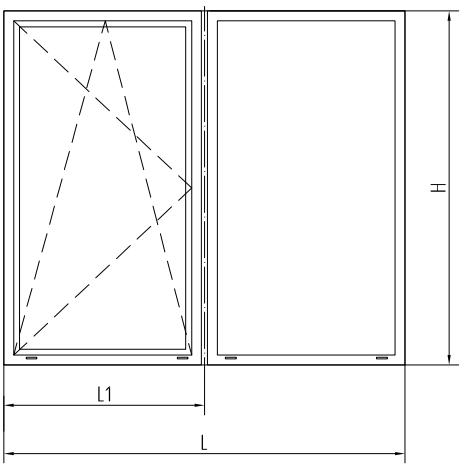

Article	Name / Image			1....
Profile				
AYPC.W62.0101E	Frame profile		L	2
			H	2
AYPC.W62.0201E	Sash profile		L3=L1-28.5	2
			H1=H-42	2
AYPC.W62.0301E	Transom bar profile		H2=H-54	1
AYPC.C48.0611	Drain profile		L6=L1-94,5	1
AYPC.C48.0612	Rod profile		-	
AYPC.C48.0606	Glass bead profile		L4=L3-92	2
			H3=H1-136	2
			L5=L2-40,5	2
			H4=H-98	2

Article	Name / Image		1....	
Accessories				
FRK51	Rubber gasket	L1x2+H1x2	1	
FRK52	Rubber corner		4	
FRK29-01	Rubber gasket	(A+B)x2+(A1+B1)x2	1	
FRK170	Rubber corner		8	
FRK36	Rubber gasket	Ax2+Bx2	1	
FRK98	Rubber gasket	L1x2+H1x2	1	
FRK101	Rubber gasket	L=100mm	2*	
FRK101	Rubber gasket	L1x2+H1x2	1	See p.05.05
AYPC.W62.0901M	Bearing support		10	
100x32x1 (3)	Leveling support		10 (10)	
AYPC.C48.0919M	Drain plug		4	
AYPC.W62.0952	Clamping corner		4	
AYPC.W62.0952-03	Clamping corner		4	
AYPC.W62.0952-01	Clamping corner		4	
AYPC.W62.0952-02	Clamping corner		4	
AYPC.W62.0951	Transom fixing element		4	
AYPC.W62.0915	Foamed support		2	
AYPC.W62.0912	Plastic corner		8	
AYPC.W62.0913	Plastic corner		4	
AYPC.W62.0957	Leveling corner		4	
3,9x13-A2 DIN7981	Self-tapping screw	L6/250		

1. Select articles of glass bead profiles and gaskets depending on infill unit thickness (see part 06 - Table of glazing).
2. The dimensions and quantities of the AYPC.C48.0612 rod profile are determined by the type of hardware and sash dimensions (L1 and H1).
3. * The quantity of FRK101 gasket depends on the type of opening and hinges quantity.

Example of combined double casement window calculation

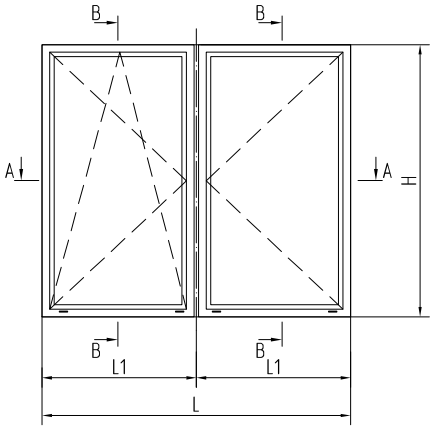

B–B

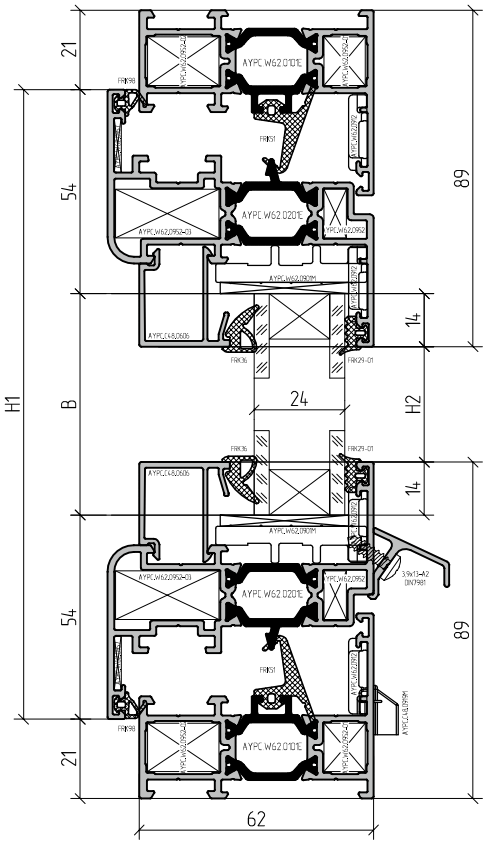

A–A

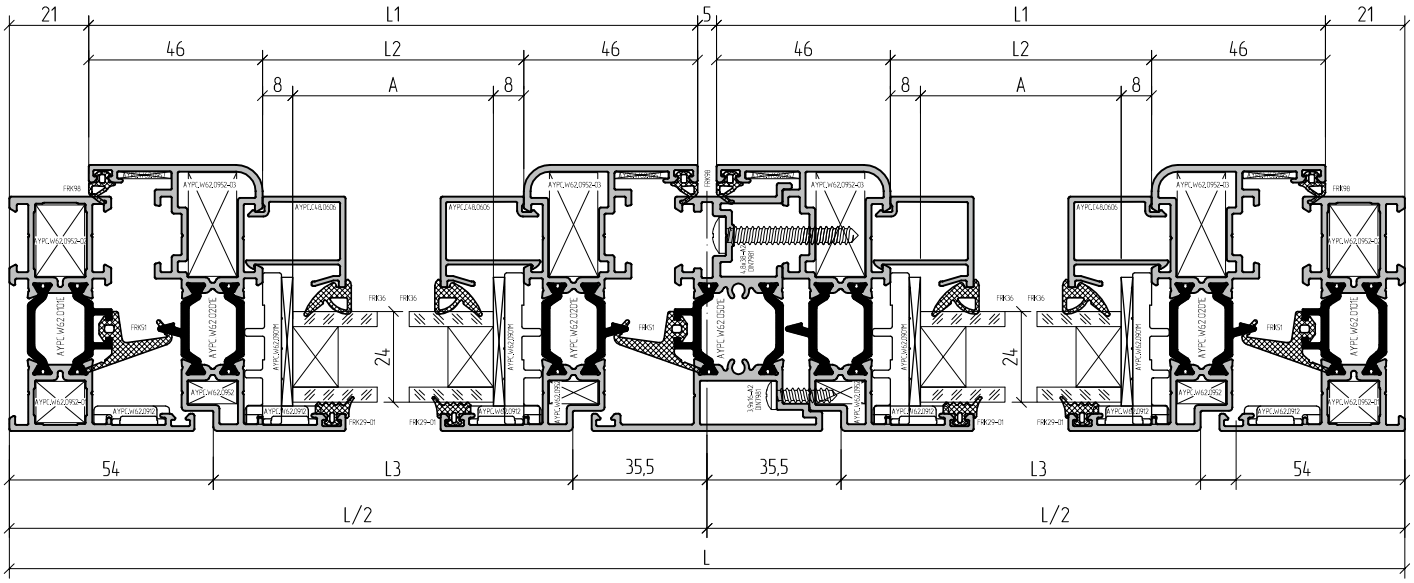

24 mm infill unit

A=L1-108, B=H1-108	2

Example of combined double casement window calculation

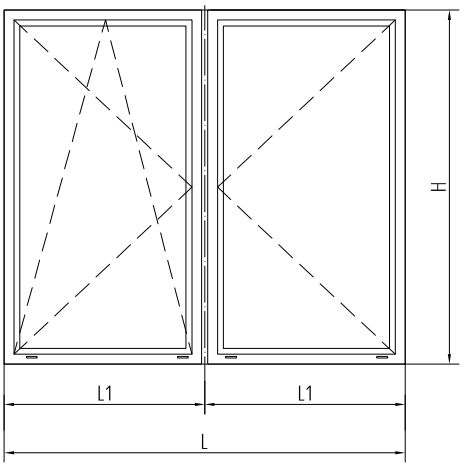

Article	Name / Image			1...
Profile				
AYPC.W62.0101E	Frame profile		L	2
			H	2
AYPC.W62.0201E	Sash profile		L1=L/2-23,5	4
			H1=H-42	4
AYPC.W62.0501E	Double casement profile		H3=H1-66	1
AYPC.C48.0611	Drain profile		L3=L/2-89.5	2
AYPC.C48.0612	Rod profile		-	
AYPC.C48.0606	Glass bead profile		L2=L1-92	4
			H2=H1-136	4

Article	Name / Image		1....	
Accessories				
FRK51	Rubber gasket	Lx2+H1x2+H3	1	
FRK52	Rubber corner		4	
FRK29-01	Rubber gasket	(Ax2+Bx2)x2	1	
FRK170	Rubber corner		8	
FRK36	Rubber gasket	(Ax2+Bx2)x2	1	
FRK98	Rubber gasket	(L1x2+H1x2)x2	1	
FRK101	Rubber gasket	L=100mm	4*	
FRK101	Rubber gasket	Lx2+H1x2+H3	1	See p.05.05
AYPC.W62.0901M	Bearing support		10	
100x32x1 (3)	Leveling support		10 (10)	
AYPC.C48.0919M	Drain plug		4	
AYPC.W62.0952	Clamping corner		8	
AYPC.W62.0952-03	Clamping corner		8	
AYPC.W62.0952-01	Clamping corner		8	
AYPC.W62.0952-02	Clamping corner		8	
AYPC.W62.0912	Plastic corner		12	
AYPC.W62.0957	Leveling corner		8	
3,9x13-A2 DIN7981	Self-tapping screw		L3/250+4	
AYPC.W62.0911	Double casement profile plug		1	
AYPC.W62.0911-01	Double casement profile plug		1	
3,9x16-A2 DIN7981	Self-tapping screw		H3/450	
4,8x38-A2 DIN7981	Self-tapping screw		H3/450	

1. Select articles of glass bead profiles and gaskets depending on infill unit thickness (see part 06 – Table of glazing).
2. The dimensions and quantities of the AYPC.C48.0612 rod profile are determined by the type of hardware and sash dimensions (L1 and H1).
3. * The quantity of FRK101 gasket depends on the type of opening and hinges quantity.

Example of tilt and turn PVC-hardware window calculation

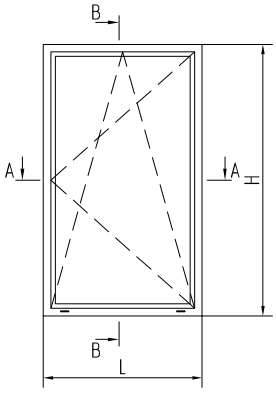

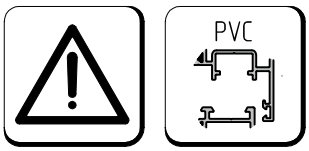

B–B

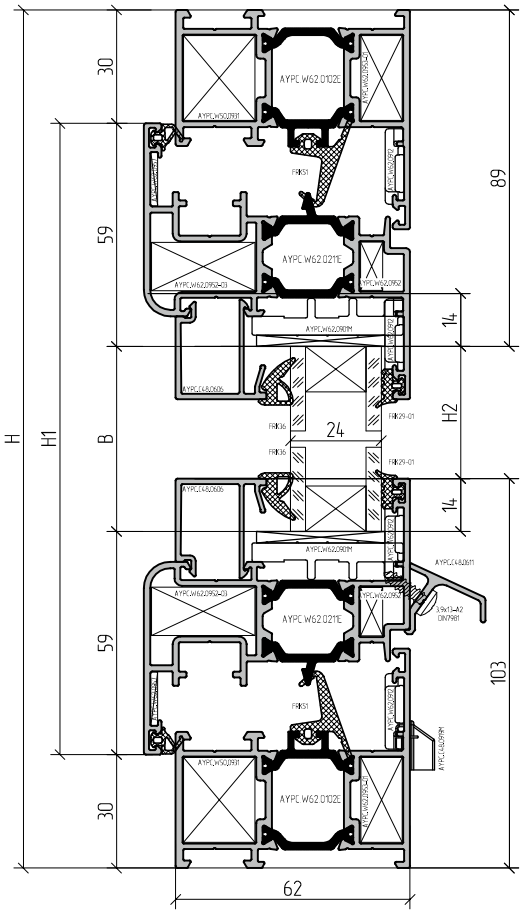

A–A

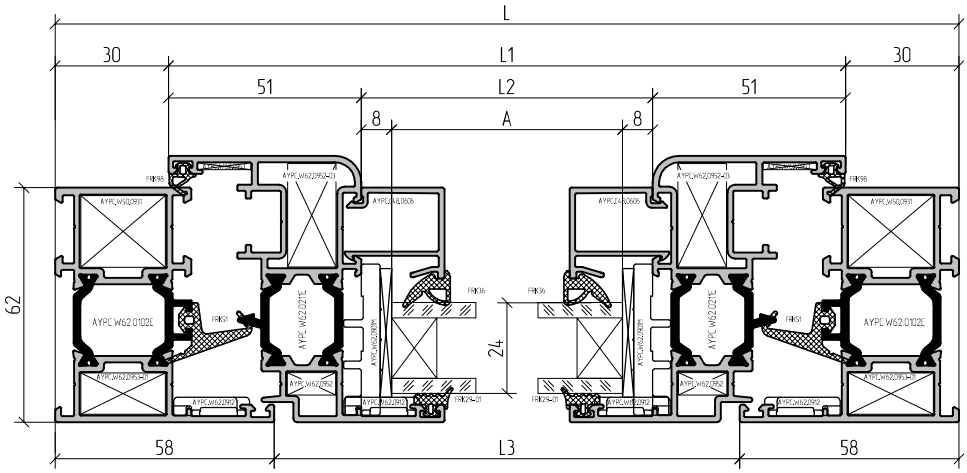

24 mm infill unit

A=L1-118 ; B=H1-118	1

Only AYPC.W62.0102E or AYPC.W62.0302E are used as frame profile.

Example of tilt and turn PVC-hardware window calculation

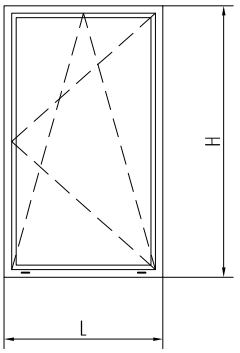

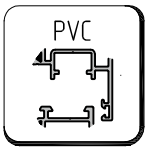

Article	Name / Image			1....
Profile				
AYPC.W62.0102E	Frame profile		L	2
			H	2
AYPC.W62.0211E	Sash profile		L1=L-60	2
			H1=H-60	2
AYPC.C48.0611	Drain profile		L3=L-126	1
AYPC.C48.0606	Glass bead profile		L2=L1-102	2
			H2=H1-146	2

Article	Name / Image		1....	
Accessories				
FRK51	Rubber gasket	L1x2+H1x2	1	
FRK52	Rubber corner		4	
FRK29-01	Rubber gasket	Ax2+Bx2	1	
FRK170	Rubber corner		4	
FRK36	Rubber gasket	Ax2+Bx2	1	
FRK98	Rubber gasket	L1x2+H1x2	1	
FRK101	Rubber gasket	L=60mm	2*	
FRK101	Rubber gasket	L1x2+H1x2	1	See p.05.05
AYPC.W62.0901M	Bearing support		6	
100x32x1 (3)	Leveling support		6 (6)	
AYPC.C48.0919M	Drain plug		2	
AYPC.W62.0952	Clamping corner		4	
AYPC.W62.0952-03	Clamping corner		4	
AYPC.W62.0953-01	Clamping corner		4	
AYPC.W50.0931	Clamping corner		4	
AYPC.W62.0912	Plastic corner		8	
AYPC.W62.0957	Leveling corner		4	
3,9x13-A2 DIN7981	Self-tapping screw	L3/250		

1. Window hardware: ROTO NT, GU UNI-JET D, SIEGENIA-AUBI Favorit.5.
2. It is necessary to drill two walls of frame profile for hinges fastening (see p. 12 – Hardware). Use hardware jig from hardware suppliers for drilling.
3. Select articles of glass bead profiles and gaskets depending on infill unit thickness (see part 06 – Table of glazing).
4. Quantity and dimensions of fastening screws is defined by the type of hardware used and sash dimensions (L1 and H1).
5. * The quantity of FRK101 gasket depends on the type of opening and hinges quantity.

Example of combined PVC-hardware window calculation

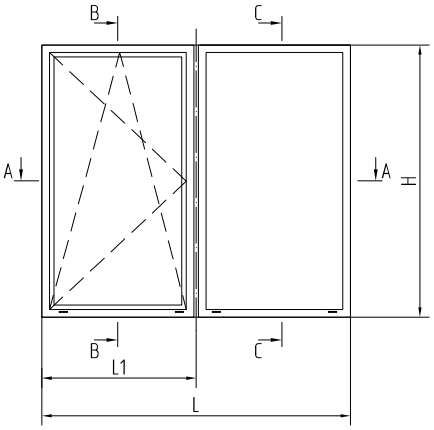

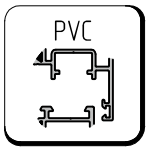

B-B

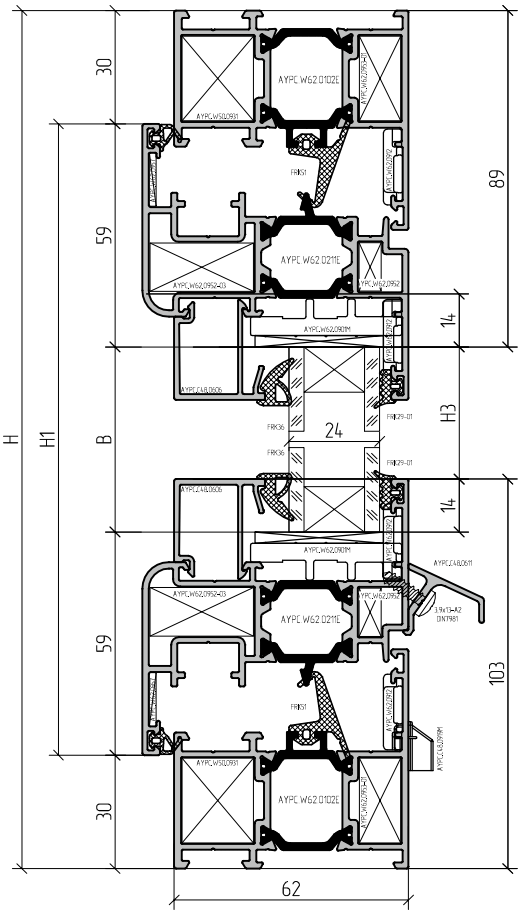

C-C

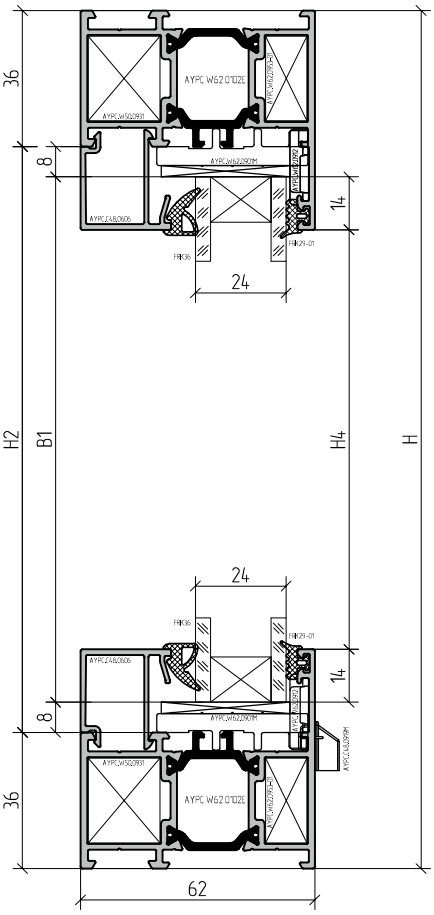

A-A

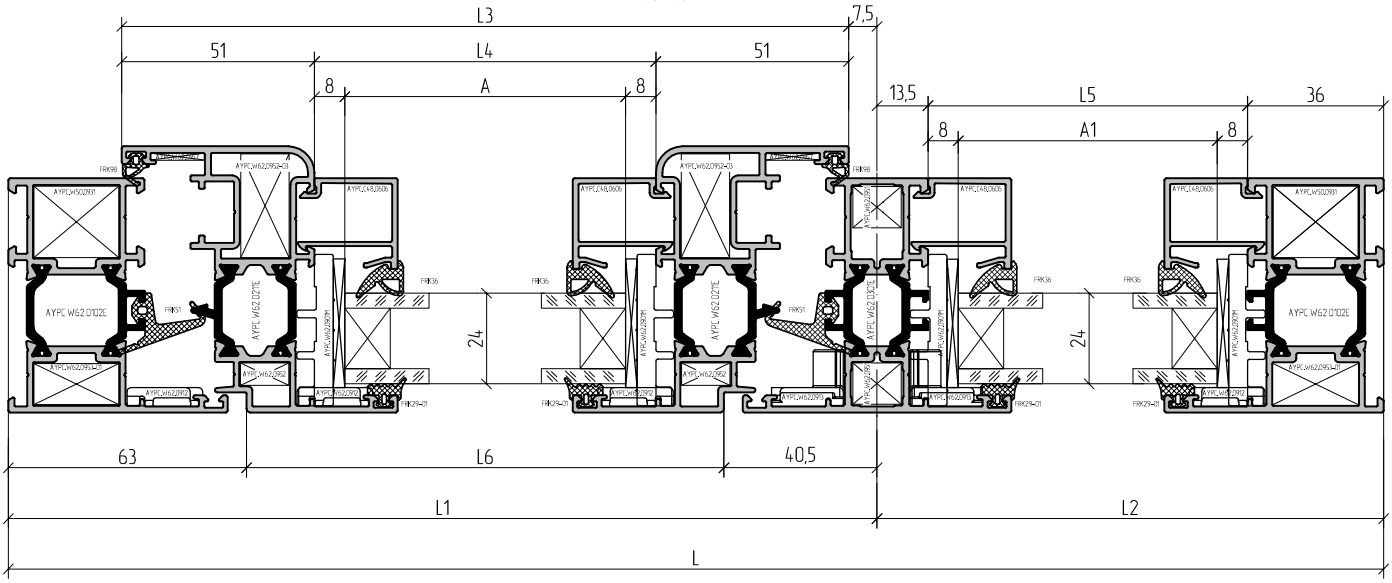

24 mm infill unit

A=L3-118 ; B=H1-118	1
A1=L2-65,5 ; B1=H-88	1

Only AYPC.W62.0102E or AYPC.W62.0302E are used as frame profile.

Example of combined PVC-hardware window calculation

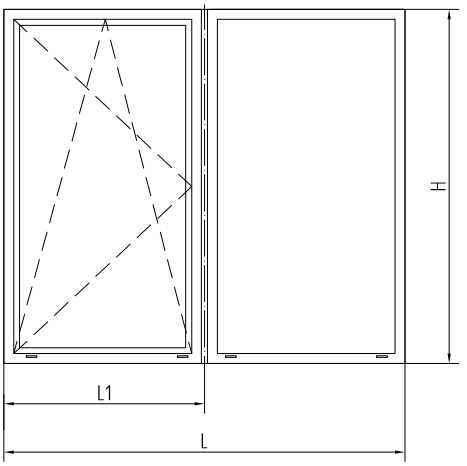

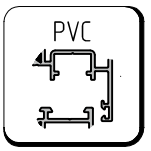

Article	Name / Image			1....
Profile				
AYPC.W62.0102E	Frame profile		L	2
			H	2
AYPC.W62.0211E	Sash profile		L3=L1-37.5	2
			H1=H-60	2
AYPC.W62.0301E	Transom bar profile		H2=H-72	1
AYPC.C48.0611	Drain profile		L6=L1-103,5	1
AYPC.C48.0606	Glass bead profile		L4=L3-102	2
			H3=H1-146	2
			L5=L2-49,5	2
			H4=H-116	2

Article	Name / Image		1....	
Accessories				
FRK51	Rubber gasket	L3x2+H1x2	1	
FRK52	Rubber corner		4	
FRK29-01	Rubber gasket	(A+B)x2+(A1+B1)x2	1	
FRK170	Rubber corner		8	
FRK36	Rubber gasket	(A+B)x2+(A1+B1)x2	1	
FRK98	Rubber gasket	L3x2+H1x2	1	
FRK101	Rubber gasket	L=60mm	2*	
FRK101	Rubber gasket	L3x2+H1x2	1	See p.05.05
AYPC.W62.0901M	Bearing support		10	
100x32x1 (3)	Leveling support		10 (10)	
AYPC.C48.0919M	Drain plug		4	
AYPC.W62.0952	Clamping corner		4	
AYPC.W62.0952-03	Clamping corner		4	
AYPC.W62.0953-01	Clamping corner		4	
AYPC.W50.0931	Clamping corner		4	
AYPC.W62.0951	Transom fixing element		4	
AYPC.W62.0915	Foamed support		2	
AYPC.W62.0912	Plastic corner		8	
AYPC.W62.0913	Plastic corner		4	
AYPC.W62.0957	Leveling corner		4	
3,9x13-A2 DIN7981	Self-tapping screw		L6/250	

1. Window hardware: ROTO NT, GU UNI-JET D, SIEGENIA-AUBI Favorit.5.
2. It is necessary to drill two walls of frame profile for hinges fastening (see p. 12 – Hardware). Use hardware jig from hardware suppliers for drilling.
3. Select articles of glass bead profiles and gaskets depending on infill unit thickness (see part 06 – Table of glazing).
4. Quantity and dimensions of fastening screws is defined by the type of hardware used and sash dimensions (L1 and H1).
5. * The quantity of FRK101 gasket depends on the type of opening and hinges quantity.

Example of tilt and turn window calculation

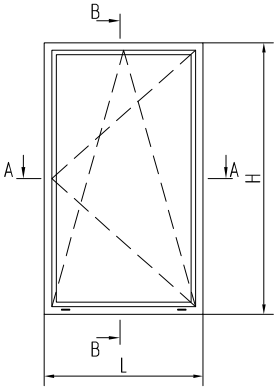

B–B

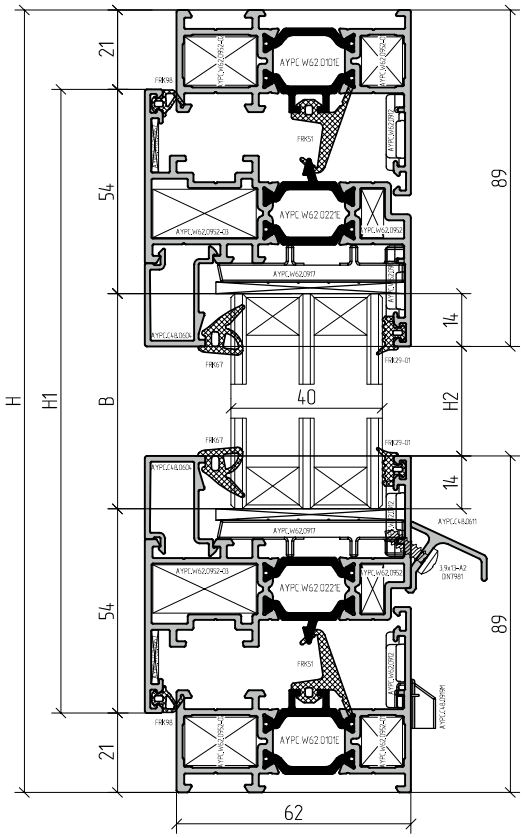

A–A

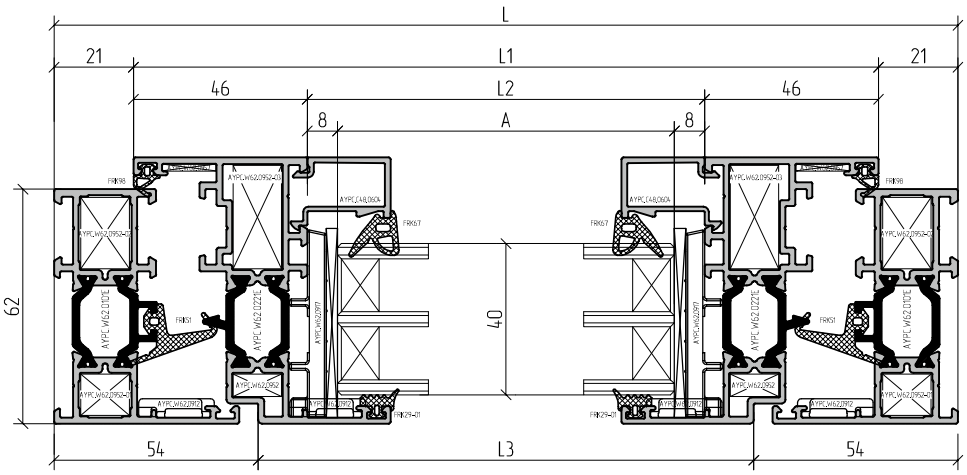

40 mm infill unit

A=L1-108, B=H1-108	1

Example of tilt and turn window calculation

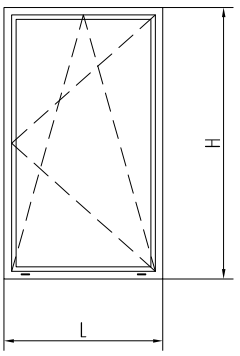

Article	Name / Image			1....
Profile				
AYPC.W62.0101E	Frame profile		L	2
			H	2
AYPC.W62.0221E	Sash profile		L1=L-42	2
			H1=H-42	2
AYPC.C48.0611	Drain profile		L3=L-108	1
AYPC.C48.0612	Rod profile		-	
AYPC.C48.0604	Glass bead profile		L2=L1-92	2
			H2=H1-136	2

Article	Name / Image		1....	
Accessories				
FRK51	Rubber gasket	L1x2+H1x2	1	
FRK52	Rubber corner		4	
FRK29-01	Rubber gasket	Ax2+Bx2	1	
FRK170	Rubber corner		4	
FRK67	Rubber gasket	Ax2+Bx2	1	
FRK98	Rubber gasket	L1x2+H1x2	1	
FRK101	Rubber gasket	L=100mm	4*	
FRK101	Rubber gasket	L1x2+H1x2	1	See p.05.05
AYPC.W62.0917	Bearing support		6	
100x50x1 (3)	Leveling support		6 (6)	
AYPC.C48.0919M	Drain plug		2	
AYPC.W62.0952	Clamping corner		4	
AYPC.W62.0952-03	Clamping corner		4	
AYPC.W62.0952-01	Clamping corner		4	
AYPC.W62.0952-02	Clamping corner		4	
AYPC.W62.0912	Plastic corner		8	
AYPC.W62.0957	Leveling corner		4	
3,9x13-A2 DIN7981	Self-tapping screw	L3/250		

1. Select articles of glass bead profiles and gaskets depending on infill unit thickness (see part 06 – Table of glazing).
2. The dimensions and quantities of the AYPC.C48.0612 rod profile are determined by the type of hardware and sash dimensions (L1 and H1).
3. * The quantity of FRK101 gasket depends on the type of opening and hinges quantity.

Example of combined window calculation

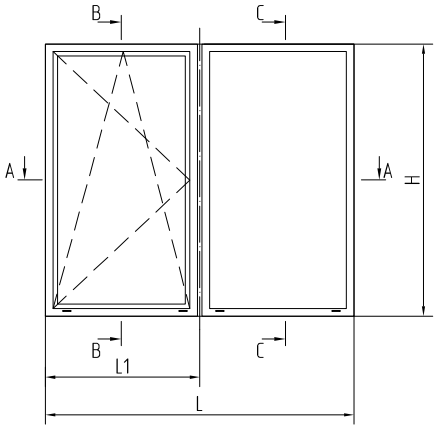

B–B

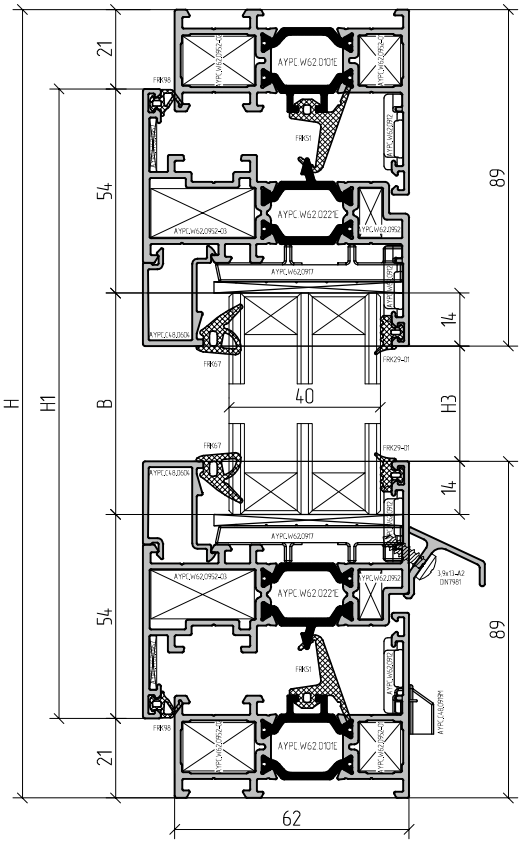

C–C

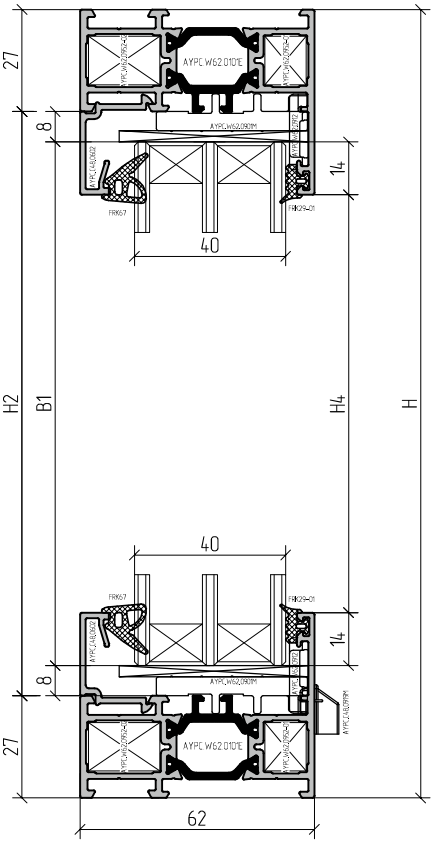

A–A

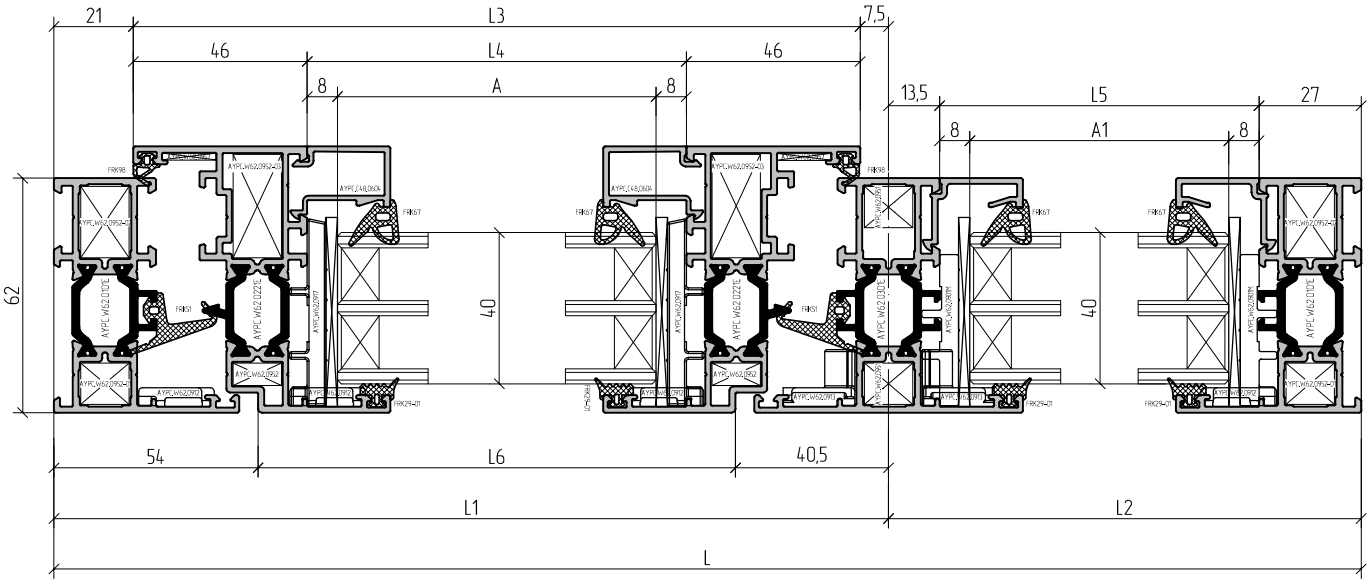

40 mm infill unit

A=L3–108 ; B=H1–108	1
A1=L2–56,5 ; B1=H–70	1

Example of combined window calculation

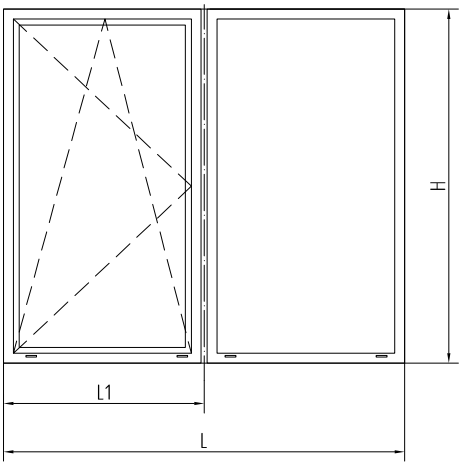

Article	Name / Image			1....
Profile				
AYPC.W62.0101E	Frame profile		L	2
			H	2
AYPC.W62.0221E	Sash profile		L3=L1-28.5	2
			H1=H-42	2
AYPC.W62.0301E	Transom bar profile		H2=H-54	1
AYPC.C48.0611	Drain profile		L6=L1-94,5	1
AYPC.C48.0612	Rod profile		-	
AYPC.C48.0604	Glass bead profile		L4=L3-92	2
			H3=H1-136	2
AYPC.C48.0602	Glass bead profile		L5=L2-40,5	2
			H4=H-98	2

Article	Name / Image		1....	
Accessories				
FRK51	Rubber gasket	L1x2+H1x2	1	
FRK52	Rubber corner		4	
FRK29-01	Rubber gasket	(A+B)x2+(A1+B1)x2	1	
FRK170	Rubber corner		8	
FRK67	Rubber gasket	Ax2+Bx2	1	
FRK98	Rubber gasket	L1x2+H1x2	1	
FRK101	Rubber gasket	L=100mm	4*	
FRK101	Rubber gasket	L1x2+H1x2	1	See p.05.05
AYPC.W62.0901M	Bearing support		4	
AYPC.W62.0917	Bearing support		10	
100x50x1 (3)	Leveling support		10 (10)	
AYPC.C48.0919M	Drain plug		4	
AYPC.W62.0952	Clamping corner		4	
AYPC.W62.0952-03	Clamping corner		4	
AYPC.W62.0952-01	Clamping corner		4	
AYPC.W62.0952-02	Clamping corner		4	
AYPC.W62.0951	Transom fixing element		4	
AYPC.W62.0915	Foamed support		2	
AYPC.W62.0912	Plastic corner		8	
AYPC.W62.0913	Plastic corner		4	
AYPC.W62.0957	Leveling corner		4	
3,9x13-A2 DIN7981	Self-tapping screw	L6/250		

1. Select articles of glass bead profiles and gaskets depending on infill unit thickness (see part 06 – Table of glazing).
2. The dimensions and quantities of the AYPC.C48.0612 rod profile are determined by the type of hardware and sash dimensions (L1 and H1).
3. * The quantity of FRK101 gasket depends on the type of opening and hinges quantity.

Example of combined double casement window calculation

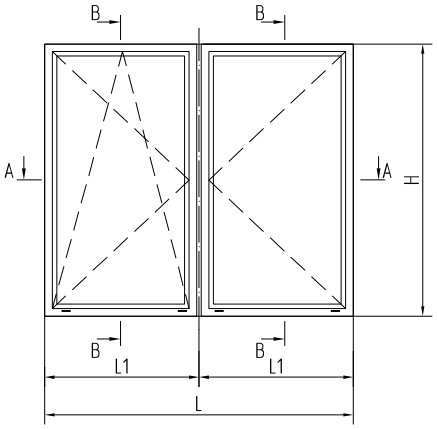

B–B

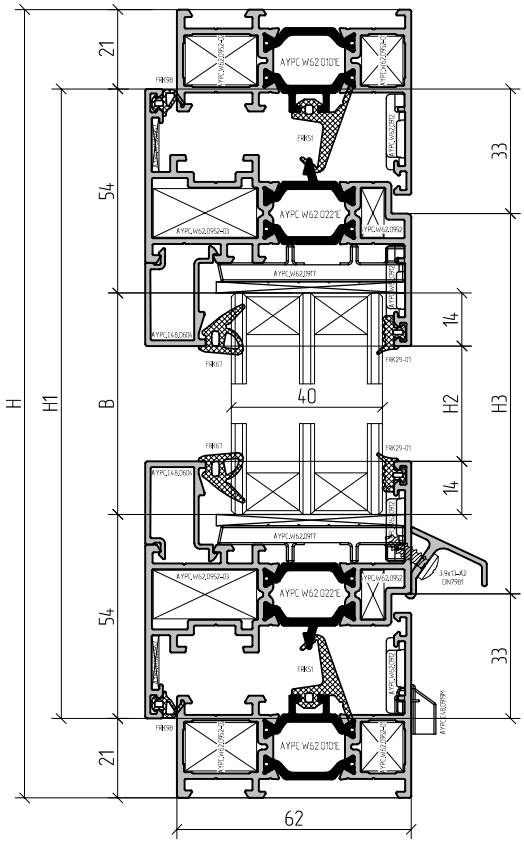

A–A

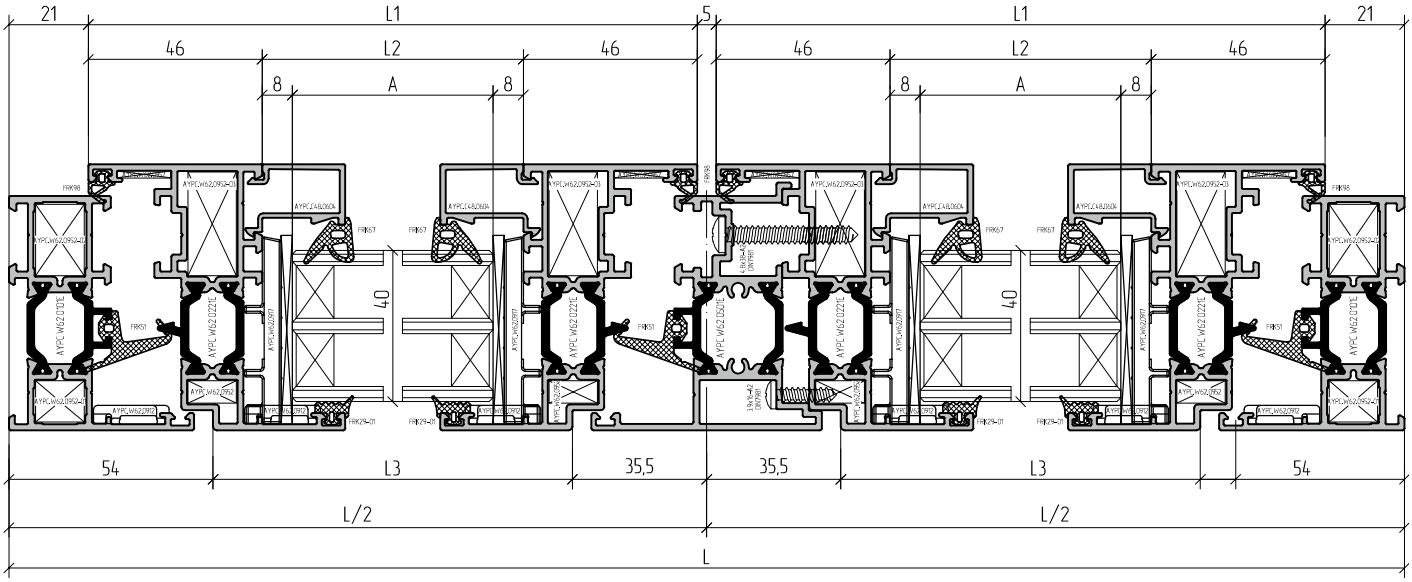

44 mm infill unit

A=L1-108, B=H1-108	2

Example of combined double casement window calculation

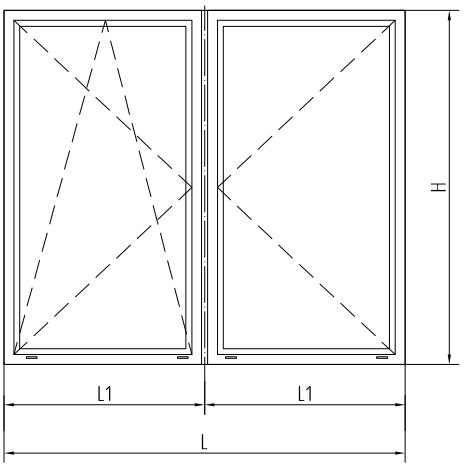

Article	Name / Image			1....
Profile				
AYPC.W62.0101E	Frame profile		L	2
			H	2
AYPC.W62.0221E	Sash profile		L1=L/2-23,5	4
			H1=H-42	4
AYPC.W62.0501E	Double casement profile		H3=H1-66	1
AYPC.C48.0611	Drain profile		L3=L/2-89.5	2
AYPC.C48.0612	Rod profile		-	
AYPC.C48.0604	Glass bead profile		L2=L1-92	4
			H2=H1-136	4

Article	Name / Image		1....	
Accessories				
FRK51	Rubber gasket	Lx2+H1x2+H3	1	
FRK52	Rubber corner		4	
FRK29-01	Rubber gasket	(Ax2+Bx2)x2	1	
FRK170	Rubber corner		8	
FRK67	Rubber gasket	(Ax2+Bx2)x2	1	
FRK98	Rubber gasket	(L1x2+H1x2)x2	1	
FRK101	Rubber gasket	L=100mm	4*	
FRK101	Rubber gasket	Lx2+H1x2+H3	1	See p.05.05
AYPC.W62.0917	Bearing support		10	
100x50x1 (3)	Leveling support		10 (10)	
AYPC.C48.0919M	Drain plug		4	
AYPC.W62.0952	Clamping corner		8	
AYPC.W62.0952-03	Clamping corner		8	
AYPC.W62.0952-01	Clamping corner		4	
AYPC.W62.0952-02	Clamping corner		4	
AYPC.W62.0912	Plastic corner		12	
AYPC.W62.0957	Leveling corner		8	
3,9x13-A2 DIN7981	Self-tapping screw	L3/250+4		
AYPC.W62.0911	Double casement profile plug		1	
AYPC.W62.0911-01	Double casement profile plug		1	
3,9x16-A2 DIN7981	Self-tapping screw	H3/450		
4,8x38-A2 DIN7981	Self-tapping screw	H3/450		

1. Select articles of glass bead profiles and gaskets depending on infill unit thickness (see part 06 – Table of glazing).
2. The dimensions and quantities of the AYPC.C48.0612 rod profile are determined by the type of hardware and sash dimensions (L1 and H1).
3. * The quantity of FRK101 gasket depends on the type of opening and hinges quantity.

Example of exterior opening single leaf door calculation

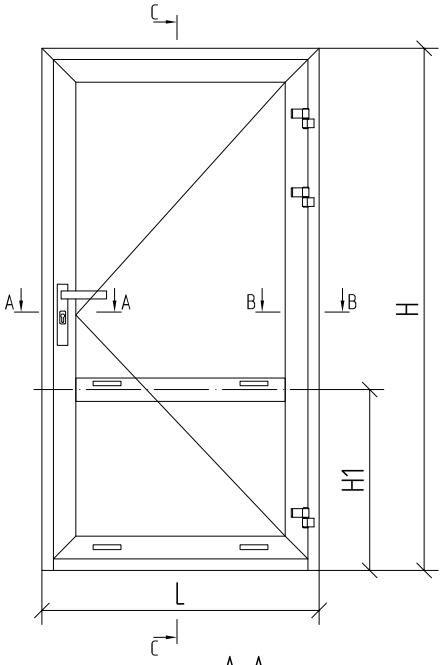

A–A

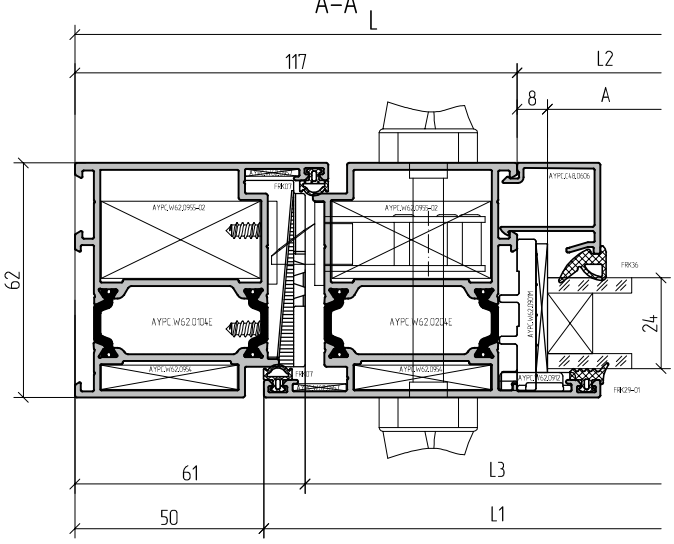

B–B

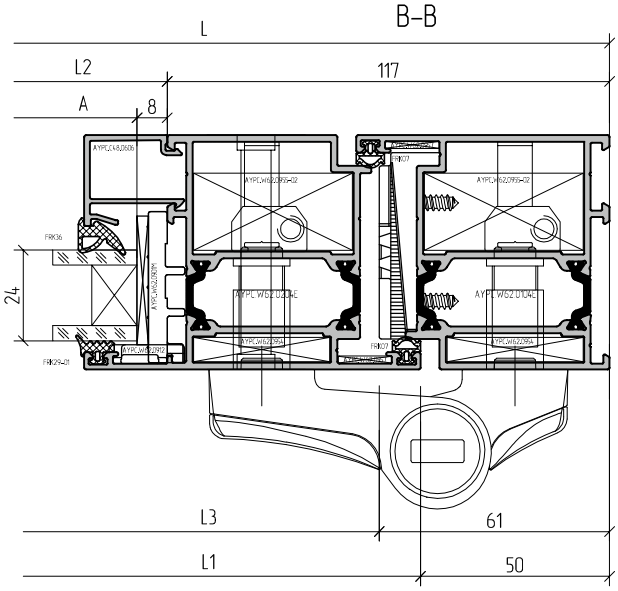

C–C

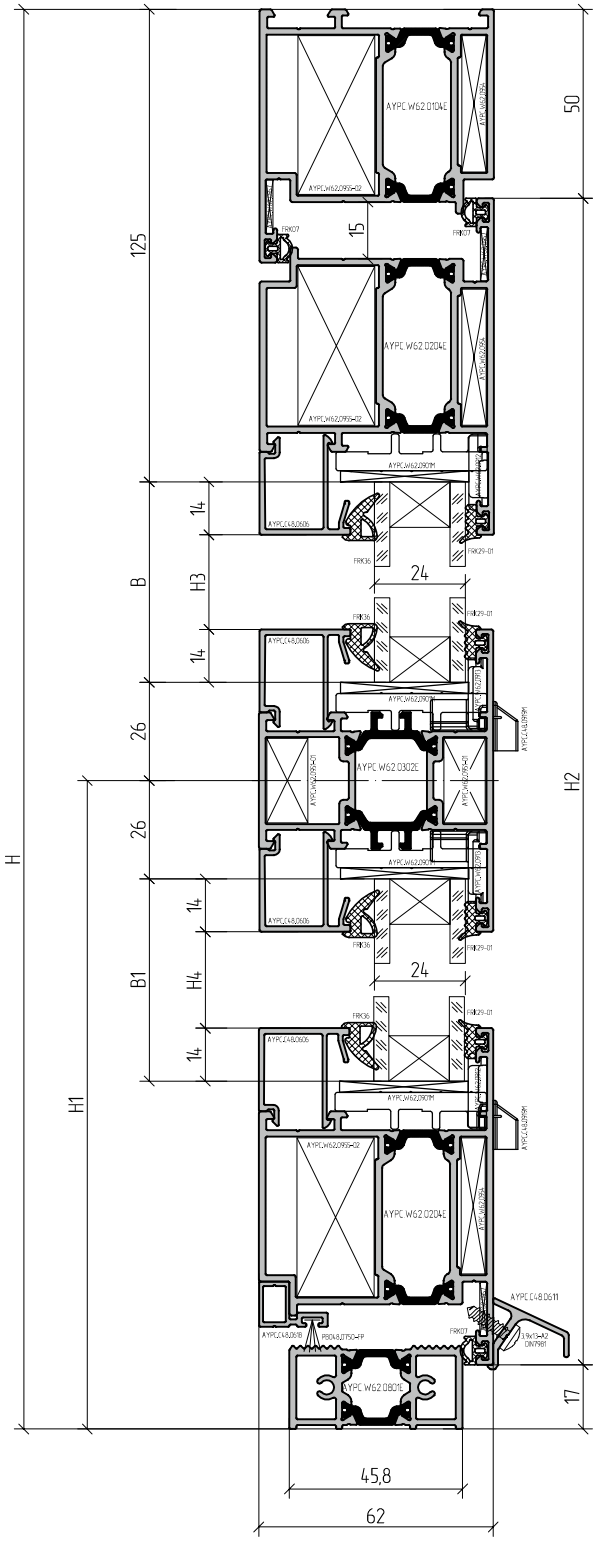

Example of exterior opening single leaf door calculation

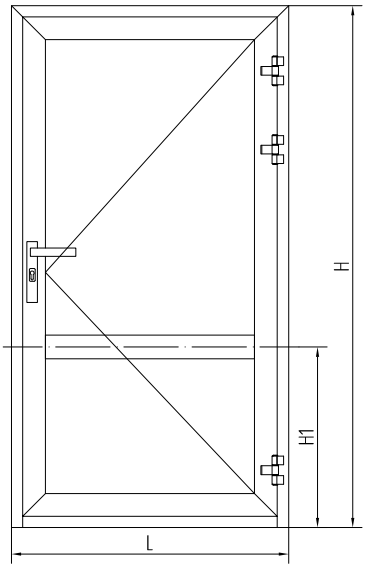

24 mm infill unit	
A=L1-150, B=H-H1-151	1
A=L1-150, B1=H1-118	1

Article	Name / Image			1....
	Profile			
AYPC.W62.0104E	Frame profile		L	1
			H	1
			H	1
AYPC.W62.0204E	Door leaf profile		L1=L-100	2
			H2=H-67	2
AYPC.W62.0302E	Transom bar profile		L2=L1-134	1
AYPC.W62.0801E	Threshold profile		L3=L-126	1
AYPC.C48.0618	Door adjoining profile		L4=L1-76	1
AYPC.C48.0611	Drain profile		L5=L1	1
AYPC.C48.0606	Glass bead profile		L6=L2	4
			H3=H-H1-179	2
			H4=H1-146	2
	Accessories			
PB048.0750-FP	Felt sealant		L4+28x2	1
FRK29-01	Rubber gasket		(A+B)x2+(A+B1)x2	1
FRK170	Rubber corner			8
FRK36	Rubber gasket		(A+B)x2+(A+B1)x2	1
FRK07	Rubber gasket		L+Hx2+(L1+H2)x2	1
AYPC.W62.0901M	Bearing support			8
100x32x1 (3)	Leveling support			8 (8)
AYPC.C48.0919M	Drain plug			4
AYPC.C48.0909	Door adjoining profile plug			2
AYPC.W62.0902	Brush holder kit			1 kit
AYPC.W62.0903	Threshold plug			2
AYPC.W62.0951-01	Transom fixing element			4
AYPC.W62.0915-01	Foamed support			2
AYPC.W62.0954	Clamping corner			6
AYPC.W62.0955-02	Clamping corner			6
AYPC.W62.0912	Plastic corner			4
AYPC.W62.0913	Plastic corner			4
AYPC.W62.0957	Leveling corner			6
3,9x13-A2 DIN7981	Self-tapping screw		L5/250	
4,2x9,5-A2 DIN7981	Self-tapping screw			8
3,9x25-A2 DIN7982	Self-tapping screw		L4/250	

1. Select articles of glass bead profiles and gaskets depending on infill unit thickness (see part 06 – Table of glazing).

Example of exterior opening single leaf door with basement calculation

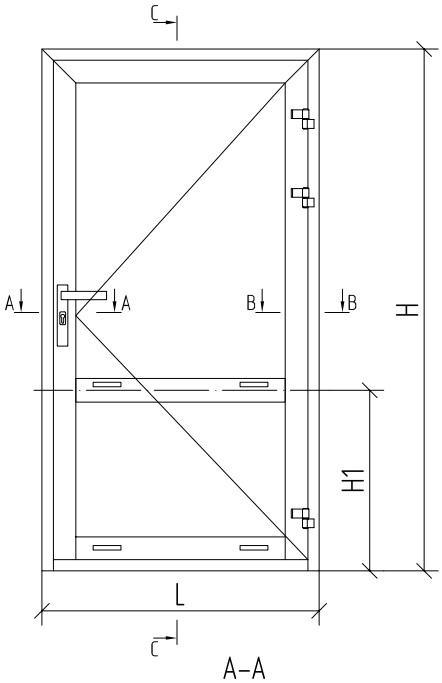

A–A

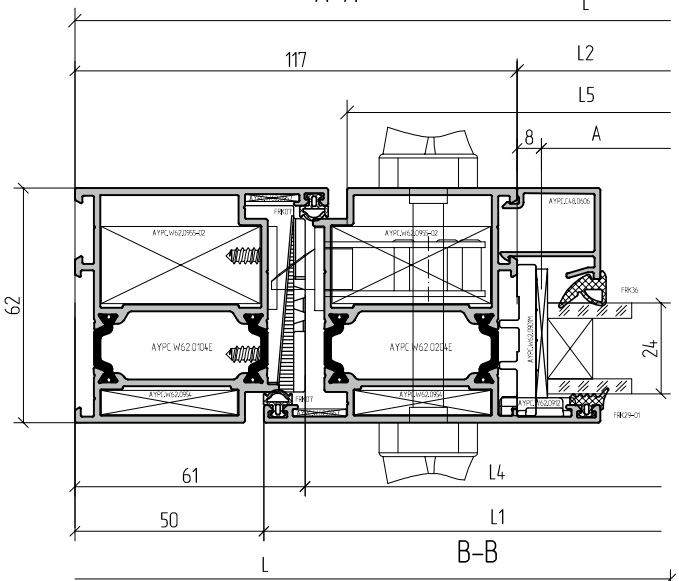

B–B

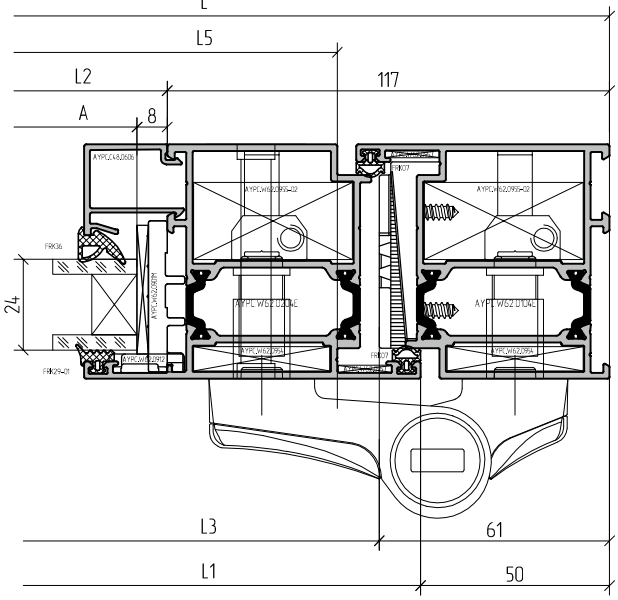

C–C

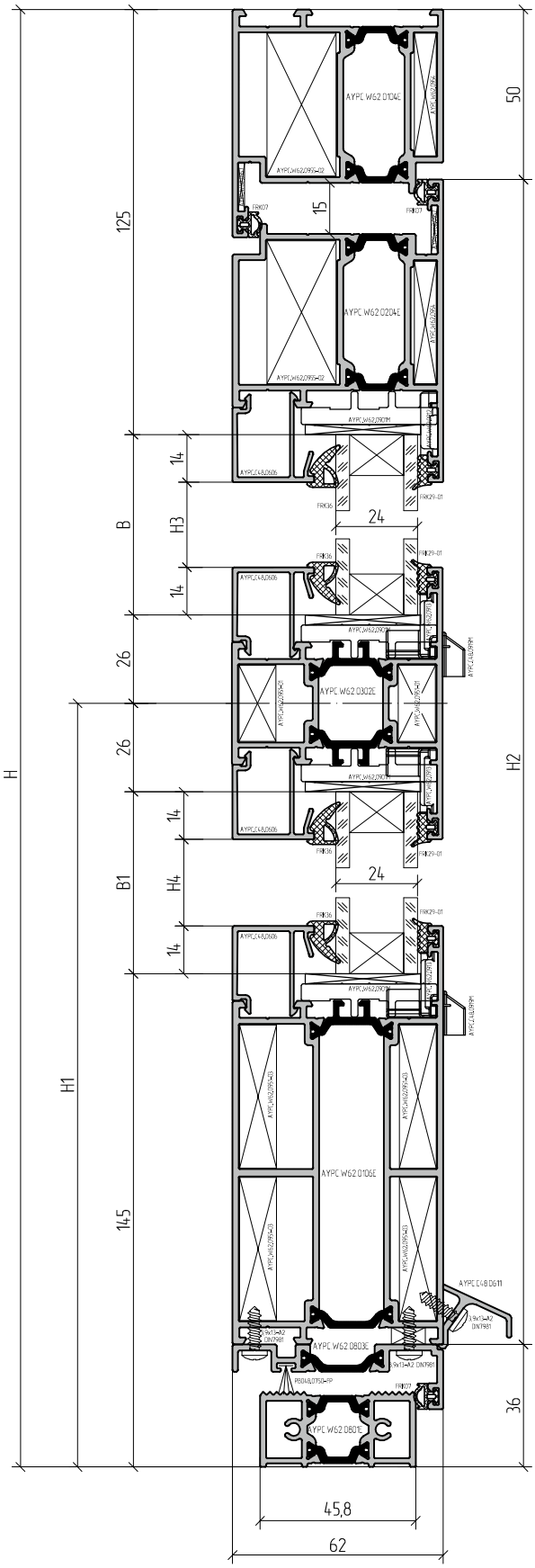

Example of exterior opening single leaf door with basement calculation

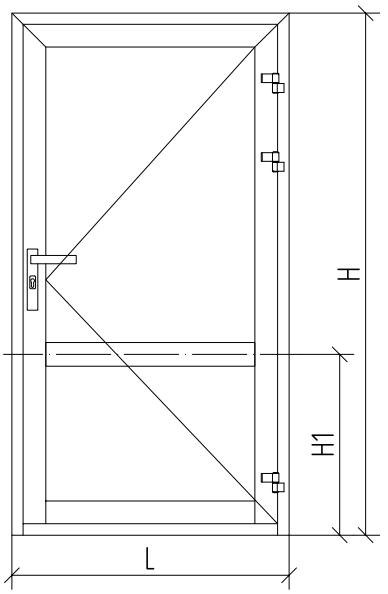

Article	Name / Image		1....
Accessories			
PB048.0750-FP	Felt sealant	L5+16	1
FRK29-01	Rubber gasket	(A+B)x2+(A+B1)x2	1
FRK170	Rubber corner		8
FRK36	Rubber gasket	(A+B)x2+(A+B1)x2	1
FRK07	Rubber gasket	L+Hx2+(L1+H2)x2	1
AYPC.W62.0901M	Bearing support		8
100x32x1 (3)	Leveling support		8 (8)
AYPC.C48.0919M	Drain plug		4
AYPC.W62.0905	Door adjoining profile plug kit		1 kit
AYPC.W62.0902	Brush holder kit		1 kit
AYPC.W62.0903	Threshold plug		2
AYPC.W62.0951-01	Transom fixing element		4
AYPC.W62.0915-01	Foamed support		2
AYPC.W62.0951-03	Transom fixing element		8
AYPC.W62.0915-03	Foamed support		2
AYPC.W62.0954	Clamping corner		4
AYPC.W62.0955-02	Clamping corner		4
AYPC.W62.0912	Plastic corner		2
AYPC.W62.0913	Plastic corner		6
AYPC.W62.0957	Leveling corner		4
3,9x13-A2 DIN7981	Self-tapping screw	L6/250+(L5/250)x2	
4,2x9,5-A2 DIN7981	Self-tapping screw		8

Article	Name / Image			1....
Profile				
AYPC.W62.0104E	Frame profile		L	1
			H	1
			H	1
AYPC.W62.0204E	Door leaf profile		L1=L-100	1
			H2=H-86	1
			H2=H-86	1
AYPC.W62.0302E	Transom bar profile		L3=L2	1
AYPC.W62.0106E	Frame profile (basement)		L2=L1-134	1
AYPC.W62.0801E	Threshold profile		L4=L-126	1
AYPC.W62.0803E	Door adjoining profile		L5=L1-44	1
AYPC.C48.0611	Drain profile		L6=L1	1
AYPC.C48.0606	Glass bead profile		L7=L2	4
			H3=H-H1-179	2
			H4=H1-199	2

24 mm infill unit	
A=L1-150, B=H-H1-151	1
A=L1-150, B1=H1-171	1

1. Select articles of glass bead profiles and gaskets depending on infill unit thickness (see part 06 – Table of glazing).

Example of exterior opening double leaf door calculation

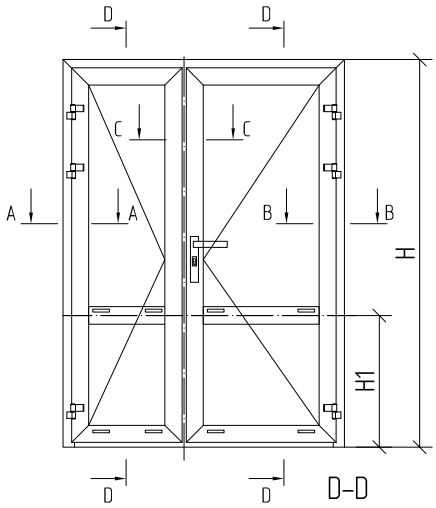

D–D

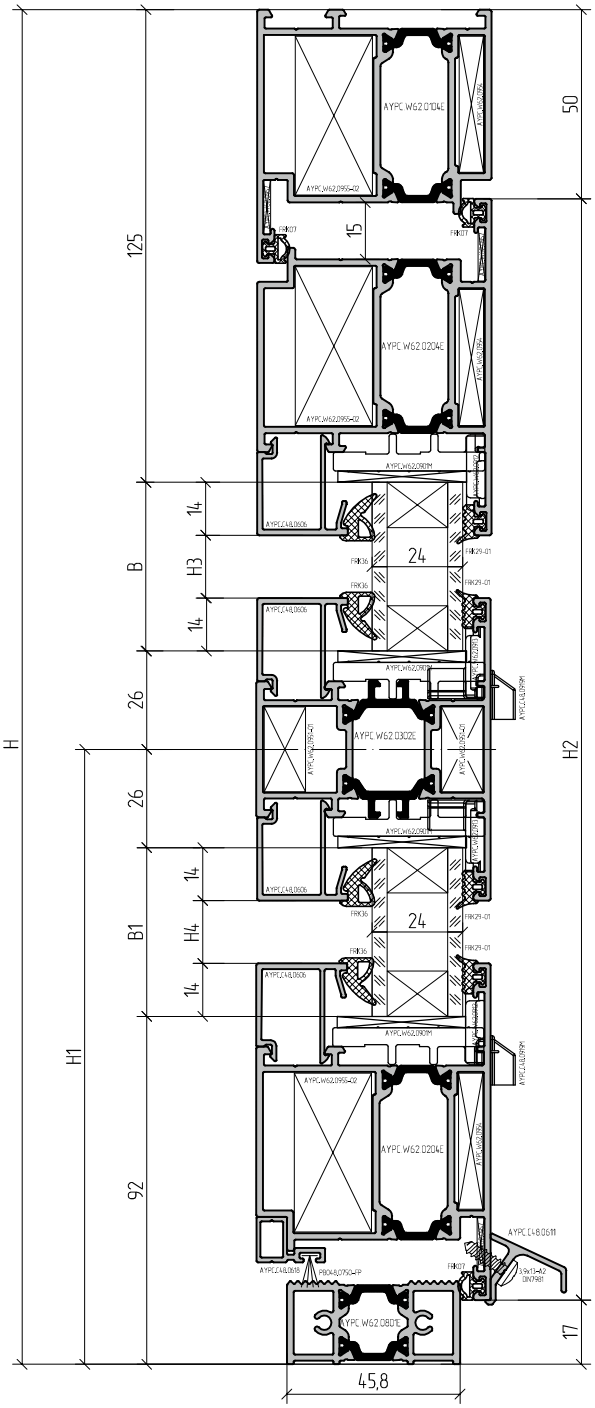

A–A

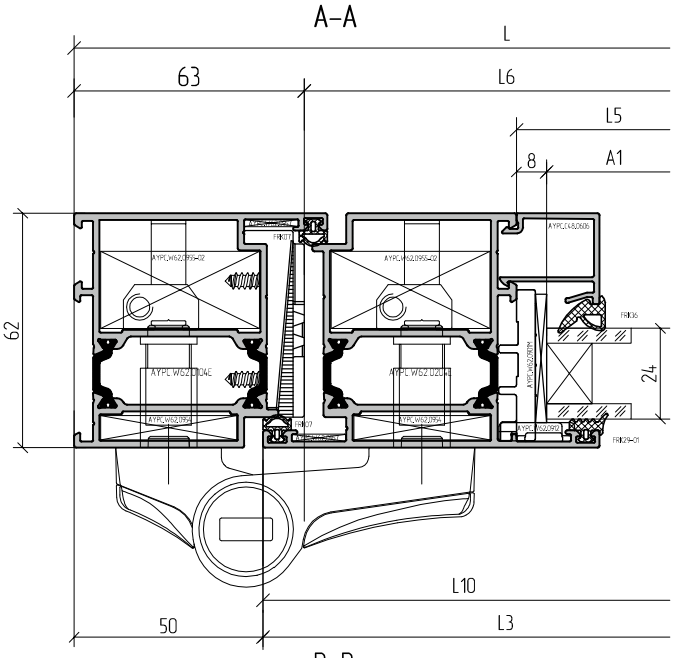

B–B

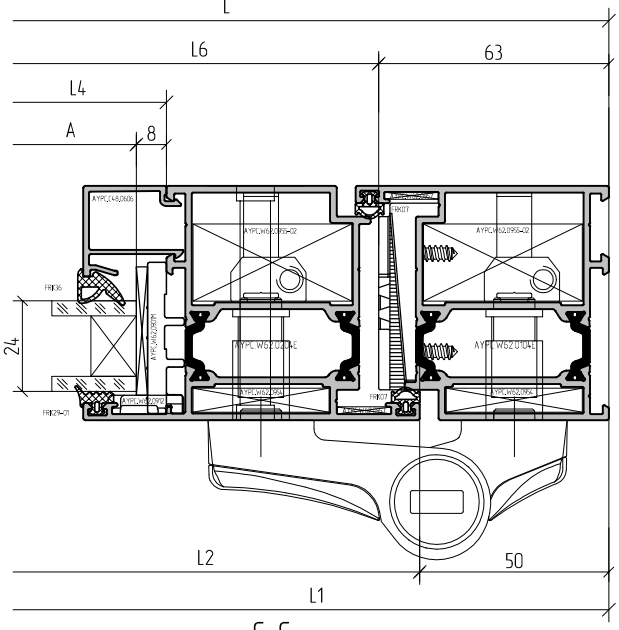

C–C

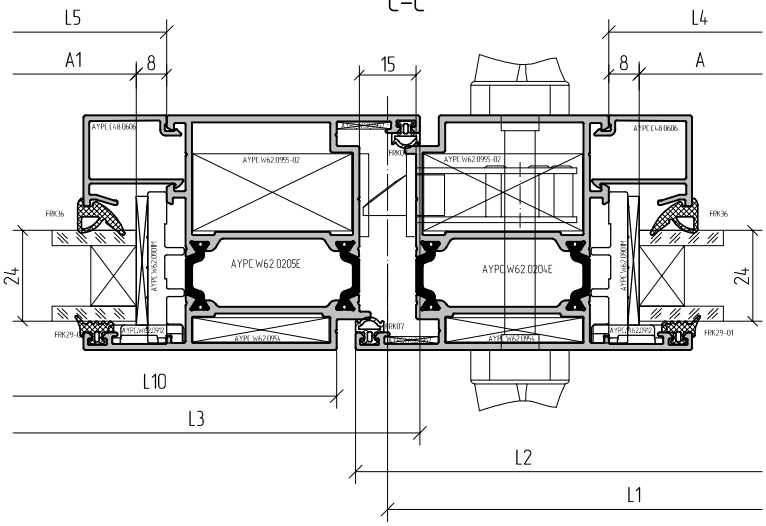

Example of exterior opening double leaf door calculation

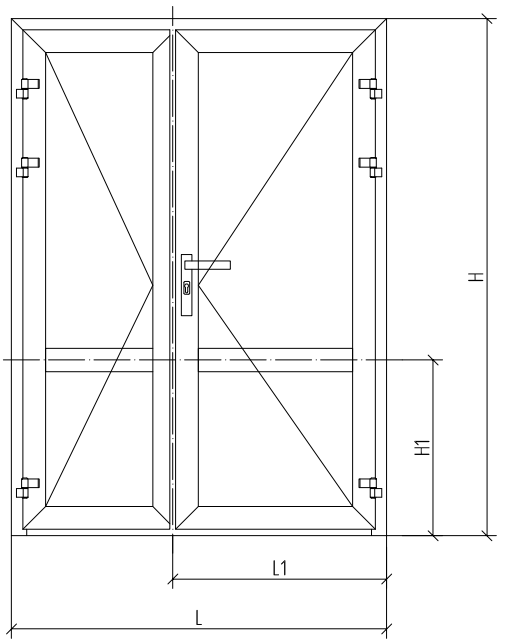

Article	Name / Image		1....
	Accessories		
PB048.0750-FP	Felt sealant	L7+L8+28x4	1
FRK29-01	Rubber gasket	(A+A1+B+B1)x4	1
FRK170	Rubber corner		16
FRK36	Rubber gasket	(A+A1+B+B1)x4	1
FRK07	Rubber gasket	(H+L2+L3)x2+L+4H2	1
AYPC.W62.0901M	Bearing support		16
100x32x1	Leveling support		16 (16)
AYPC.C48.0919M	Drain plug		8
AYPC.C48.0909	Door adjoining profile plug		4
AYPC.W62.0902	Brush holder kit		1 kit
AYPC.W62.0903	Threshold plug		2
AYPC.W62.0951-01	Transom fixing element		8
AYPC.W62.0915-01	Foamed support		4
AYPC.W62.0954	Clamping corner		10
AYPC.W62.0955-02	Clamping corner		10
AYPC.W62.0912	Plastic corner		8
AYPC.W62.0913	Plastic corner		8
AYPC.W62.0957	Leveling corner		8
AYPC.C48.0906	Plug		2
AYPC.C48.0907	Plug		1
2,9x9,5-A2 DIN7982	Self-tapping screw		3
3,9x13-A2 DIN7981	Self-tapping screw	L9/250+L10/250	
4,2x9,5-A2 DIN7981	Self-tapping screw		8
3,9x25-A2 DIN7982	Self-tapping screw	L7/250+L8/250	

Article	Name / Image		1....
	Profile		
AYPC.W62.0104E	Frame profile	L	1
		H	1
		H	1
AYPC.W62.0204E	Door leaf profile	L2=L1-41,5	2
		H2=H-67	3
		L3=L-L1-41,5 *	2
AYPC.W62.0205E	Door leaf profile	H2=H-67 *	1
AYPC.W62.0302E	Transom bar profile	L4=L2-134	1
		L5=L3-134	1
AYPC.W62.0801E	Threshold profile	L6=L-126	1
AYPC.C48.0618	Door adjoining profile	L7=L2-76	1
		L8=L3-54	1
AYPC.C48.0611....	Drain profile	L9=L2	1
		L10=L3-22	1
AYPC.C48.0606	Glass bead profile	L11=L4	4
		L12=L5	4
		H3=H-H1-179	4
		H4=H1-146	4

24 mm infill unit	
A=L2-150, B=H-H1-151	1
A=L2-150, B1=H1-118	1
A1=L3-150, B=H-H1-151	1
A1=L3-150, B1=H1-118	1

1. Select articles of glass bead profiles and gaskets depending on infill unit thickness (see part 06 – Table of glazing).
2. For profiles marked * the subsequent machining is required (see p. 10 – Profiles machining and assemblage).

Example of calculation of exterior opening double leaf door with basement

See sections on p.09.24

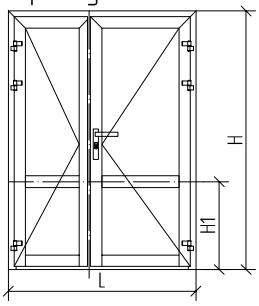

D–D

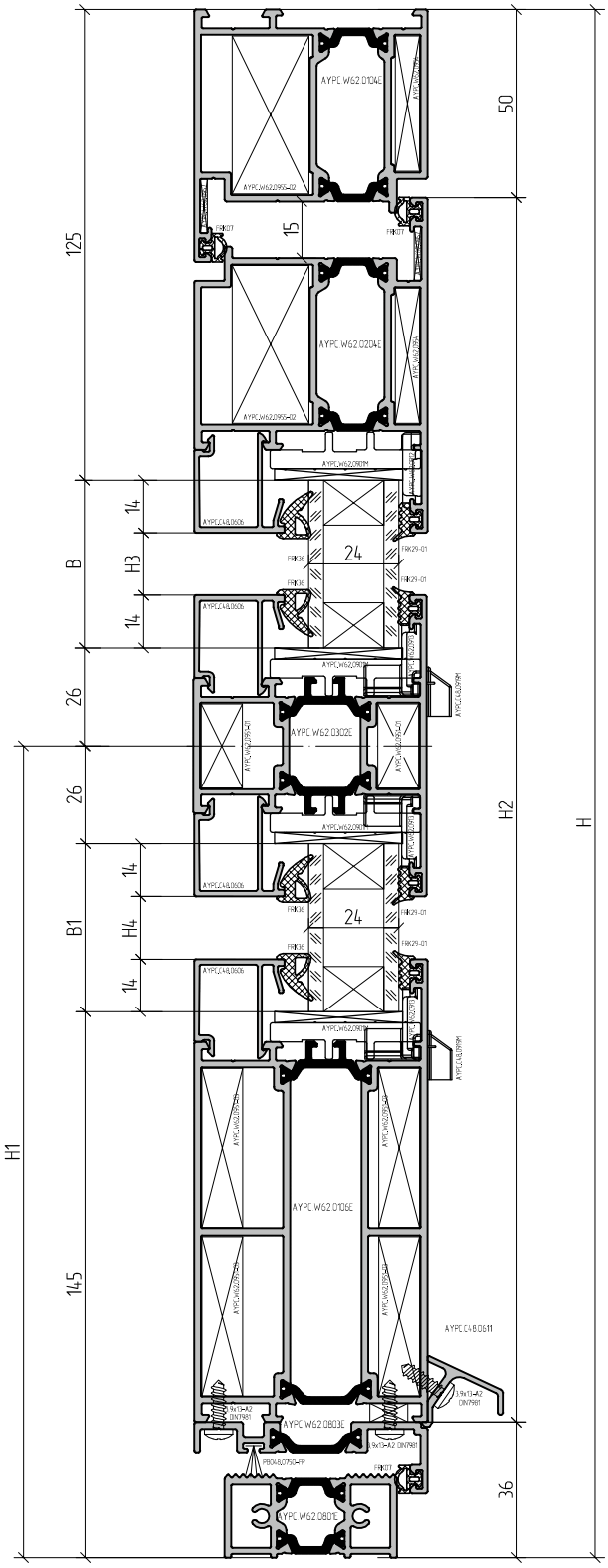

A–A

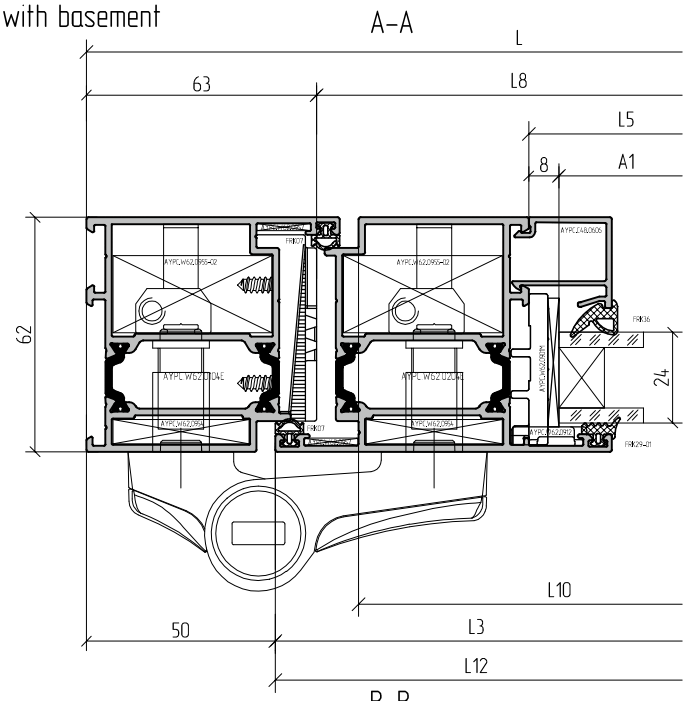

B–B

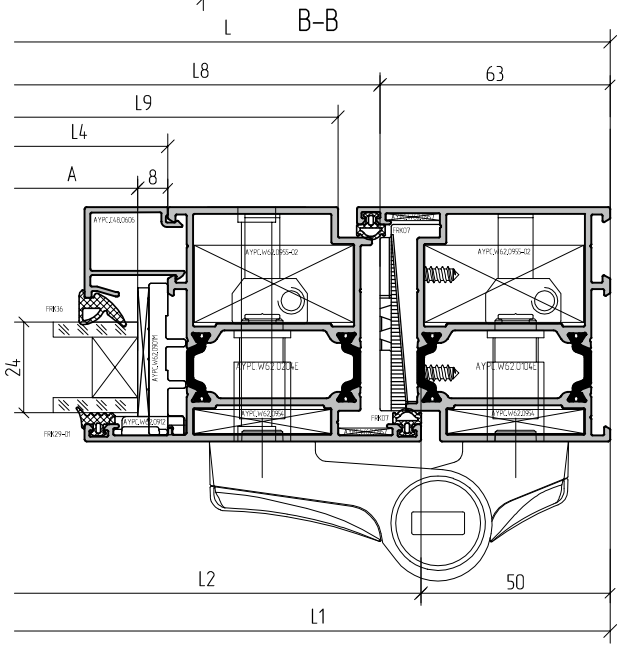

C–C

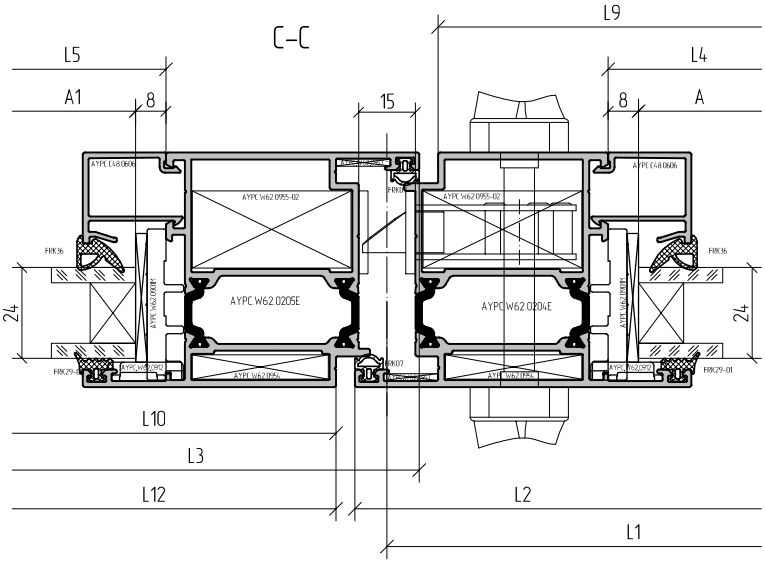

Example of calculation of exterior opening double leaf door with basement

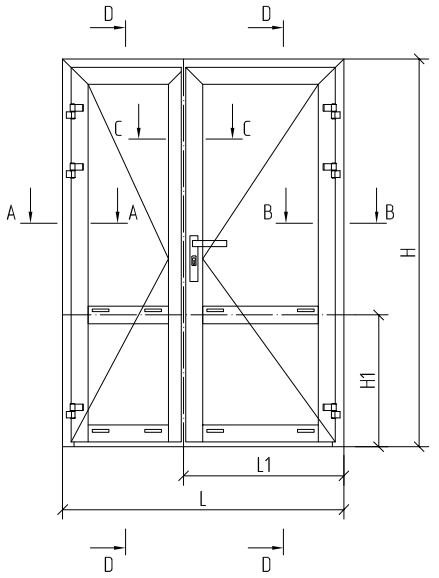

Article	Name / Image			1....
Accessories				
PB048.0750-FP	Felt sealant		L9+L10+32	1
FRK29-01	Rubber gasket		(A+A1+B+B1)x4	1
FRK170	Rubber corner			16
FRK36	Rubber gasket		(A+A1+B+B1)x4	1
FRK07	Rubber gasket		(H+L2+L3)x2+L+4H2	1
AYPC.W62.0901M	Bearing support			16
100x32x1 (3)	Leveling support			16 (16)
AYPC.C48.0919M	Drain plug			8
AYPC.W62.0905	Door adjoining profile plug kit			2 kit
AYPC.W62.0907	Door adjoining profile plug			1
AYPC.W62.0902	Brush holder kit			1 kit
AYPC.W62.0903	Threshold plug			2
AYPC.W62.0951-01	Transom fixing element			8
AYPC.W62.0915-01	Foamed support			4
AYPC.W62.0951-03	Transom fixing element			16
AYPC.W62.0915-03	Foamed support			4
AYPC.W62.0954	Clamping corner			6
AYPC.W62.0955-02	Clamping corner			6
AYPC.W62.0912	Plastic corner			4
AYPC.W62.0913	Plastic corner			12
AYPC.W62.0957	Leveling corner			5
AYPC.C48.0906	Plug			2
2,9x9,5-A2 DIN7982	Self-tapping screw			2
3,9x13-A2 DIN7981	Self-tapping screw		((L9+L10)/250)x2+(L11+L12)/250	
4,2x9,5-A2 DIN7981	Self-tapping screw			8

Article	Name / Image			1....
Profile				
AYPC.W62.0104E	Frame profile		L	1
			H	1
			H	1
AYPC.W62.0204E	Dooe leaf profile		L2=L1-41,5	1
			H2=H-86	2
			H2=H-86	1
			L3=L-L1-41,5 *	1
AYPC.W62.0205E	Dooe leaf profile		H2=H-86 *	1
AYPC.W62.0106E	Frame profile (basement)		L4=L2-134	1
			L5=L3-134	1
AYPC.W62.0302E	Transom bar profile		L6=L4	1
			L7=L5	1
AYPC.W62.0801E	Threshold profile		L8=L-126	1
AYPC.W62.0803E	Door adjoining profile		L9=L2-44	1
			L10=L3-44	1
AYPC.C48.0611	Drain profile		L11=L2	1
			L12=L3-22	1
AYPC.C48.0606	Glass bead profile		L13=L4	4
			L14=L5	4
			H3=H-H1-179	4
			H4=H1-199	4
24 mm infill unit				
A=L2-150, B=H-H1-151				1
A=L2-150, B1=H1-171				1
A1=L3-150, B=H-H1-151				1
A1=L3-150, B1=H1-171				1

1. Select articles of glass bead profiles and gaskets depending on infill unit thickness (see part 06 – Table of glazing).
2. For profiles marked * the subsequent machining is required (see p. 10 – Profiles machining and assemblage).

Example of exterior opening double leaf double casement door calculation

See sections on p.09.26

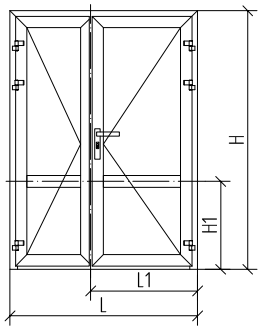

A–A

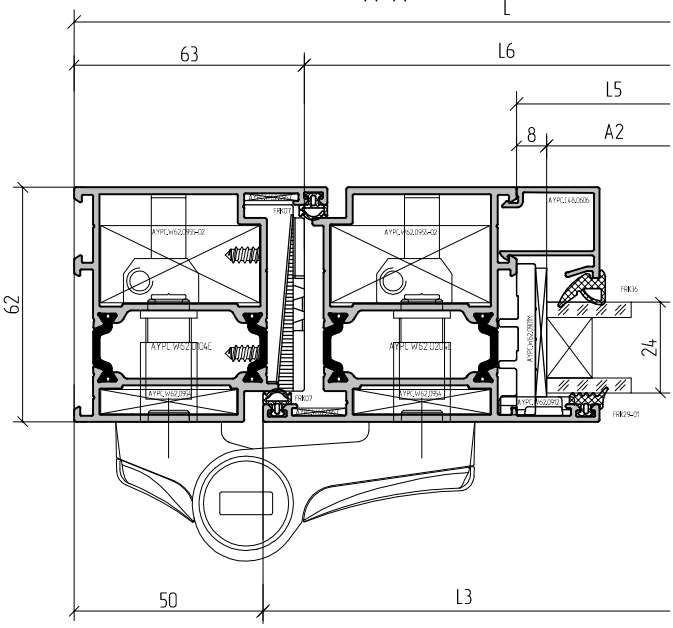

B–B

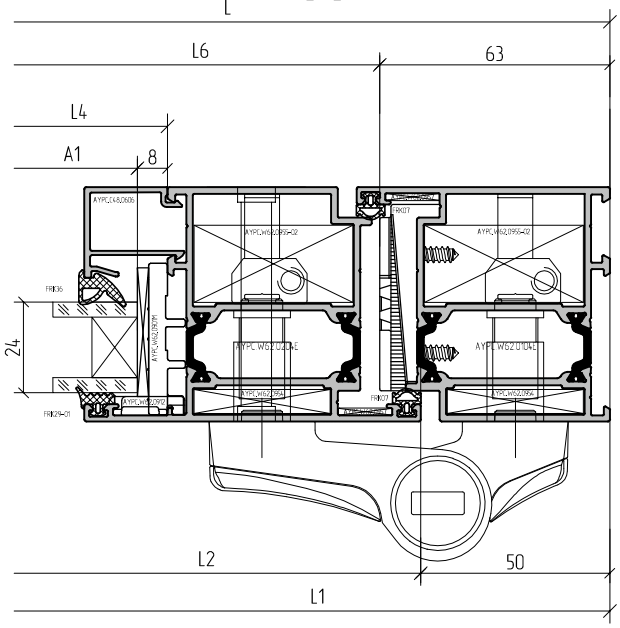

D–D

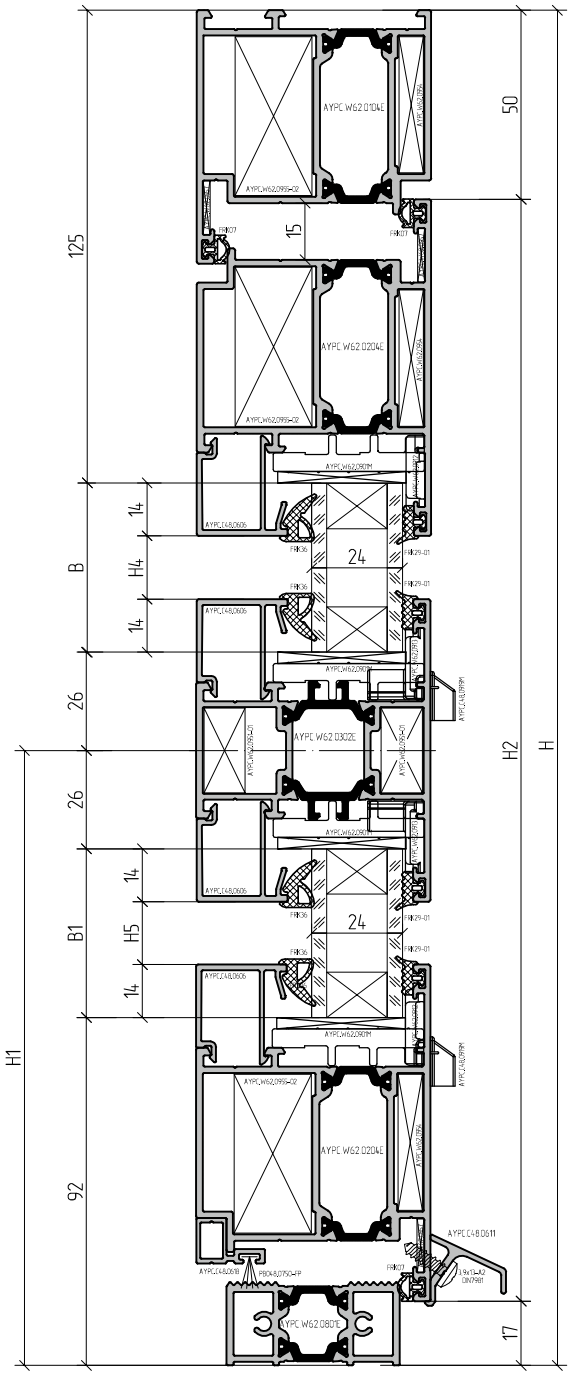

C–C

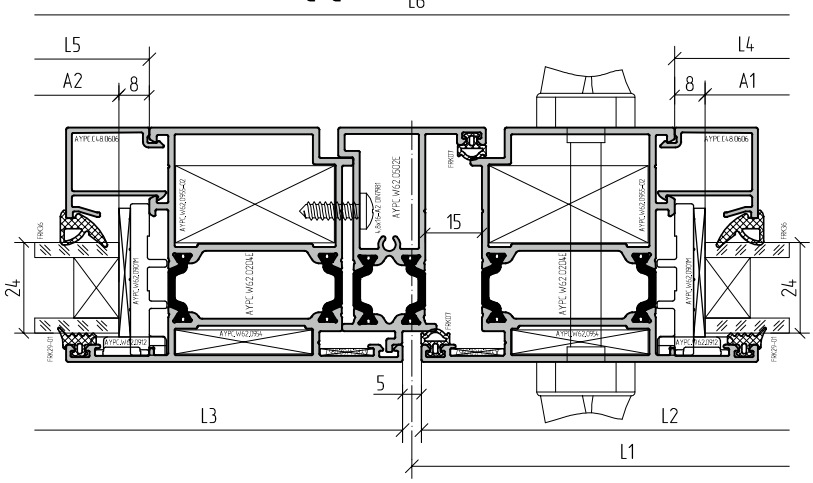

Example of exterior opening double leaf double casement door calculation

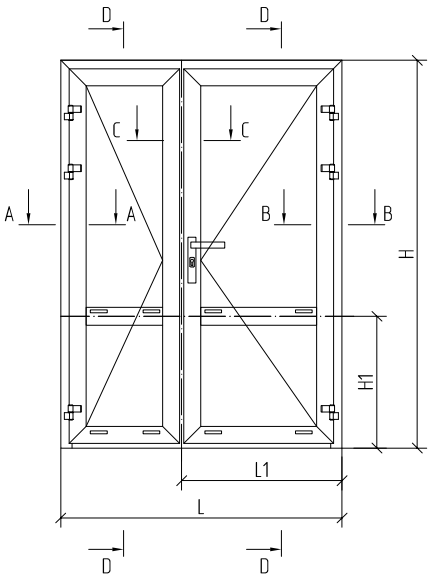

Article	Name / Image		1...
Accessories			
PB048.0750-FP	Felt sealant	L7+L8+28x4	1
FRK29-01	Rubber gasket	(A+A1+B+B1)x4	1
FRK170	Rubber corner		16
FRK36	Rubber gasket	(A+A1+B+B1)x4	1
FRK07	Rubber gasket	(H+L2+L3)x2+L+H2x4	1
AYPC.W62.0901M	Bearing support		16
100x32x1 (3)	Leveling support		16 (16)
AYPC.C48.0919M	Drain plug		8
AYPC.C48.0909	Door adjoining profile plug		4
AYPC.W62.0902	Brush holder kit		1 kit
AYPC.W62.0903	Threshold plug		2
AYPC.W62.0951-01	Transom fixing element		8
AYPC.W62.0915-01	Foamed support		4
AYPC.W62.0954	Clamping corner		10
AYPC.W62.0955-02	Clamping corner		10
AYPC.W62.0912	Plastic corner		8
AYPC.W62.0913	Plastic corner		8
AYPC.W62.0957	Leveling corner		10
AYPC.W62.0908	Double casement profile plug kit		1 kit
AYPC.W62.0909	Double casement profile plug		1
3,9x13-A2 DIN7981	Self-tapping screw		2
3,9x13-A2 DIN7981	Self-tapping screw	L9/250+L10/250	
4,2x9,5-A2 DIN7981	Self-tapping screw		8
4,8x16-A2 DIN7981	Self-tapping screw	H3/500	
3,9x25-A2 DIN7982	Self-tapping screw	L7/250+L8/250	

Article	Name / Image		1...
Profile			
AYPC.W62.0104E	Frame profile	L	1
		H	1
		H	1
AYPC.W62.0204E	Door leaf profile	L2=L1-52,5	2
		H2=H-67	4
		L3=L-L1-52,5	2
AYPC.W62.0502	Double casement profile	H3=H2-44	1
AYPC.W62.0302E	Transom bar profile	L4=L2-134	1
		L5=L3-134	1
AYPC.W62.0801E	Threshold profile	L6=L-126	1
AYPC.C48.0618	Door adjoining profile	L7=L2-76	1
		L8=L3-32	1
AYPC.C48.0611	Drain profile	L9=L2	1
		L10=L3	1
AYPC.C48.0606	Glass bead profile	L11=L4	4
		L12=L5	4
		H4=H-H1-179	4
		H5=H1-146	4
24 mm infill unit			
A=L2-150, B=H-H1-151			1
A=L2-150, B1=H1-118			1
A1=L3-150, B=H-H1-151			1
A1=L3-150, B1=H1-118			1

1. Select articles of glass bead profiles and gaskets depending on infill unit thickness (see part 06 – Table of glazing).

Example of calculation of exterior opening double leaf double casement door with basement

See sections on p.09.28

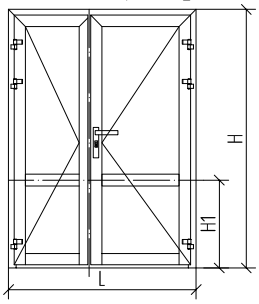

D–D

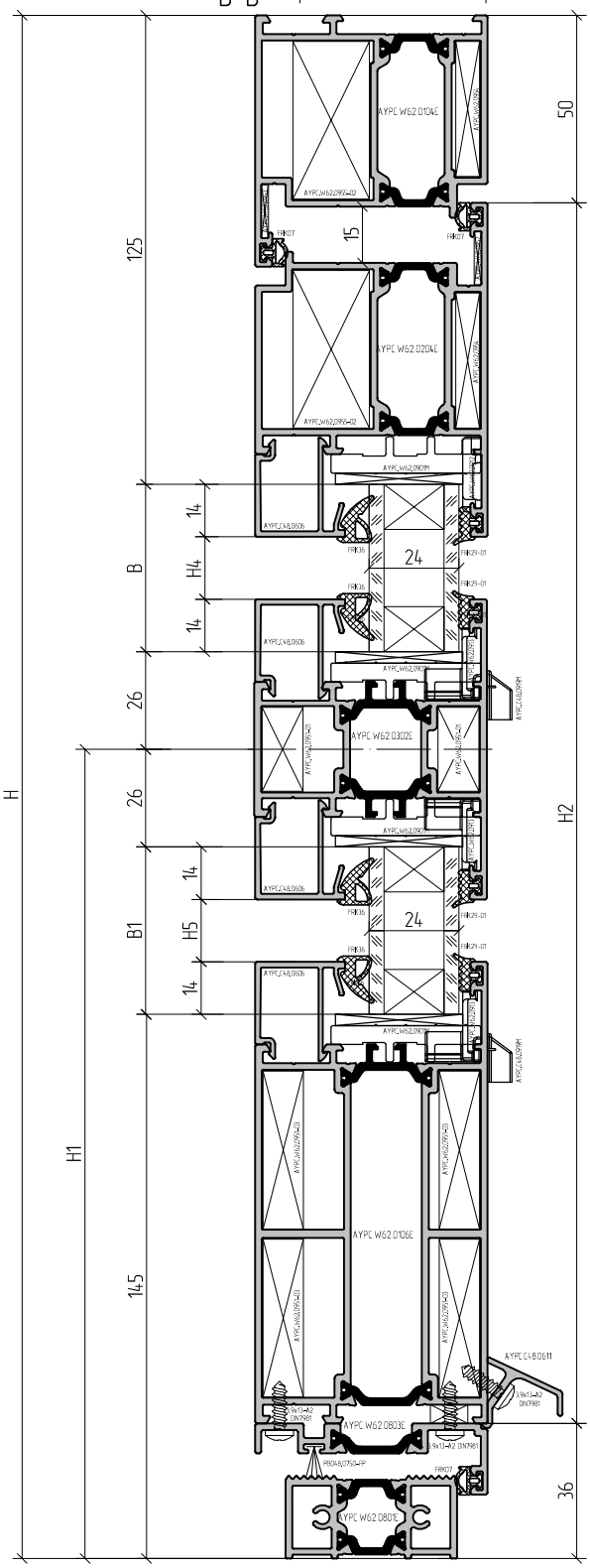

A–A

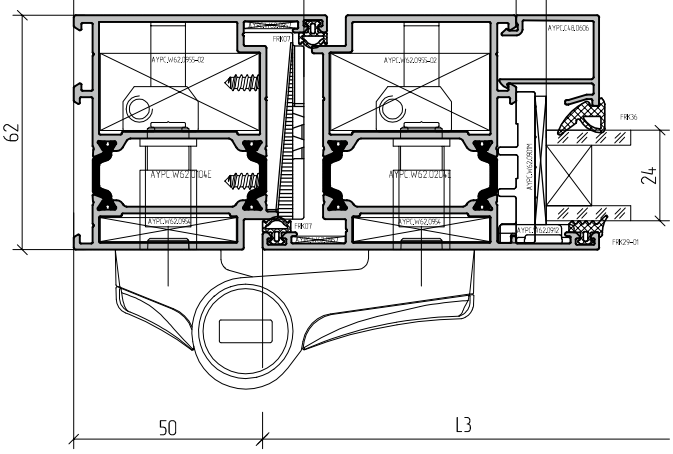

B–B

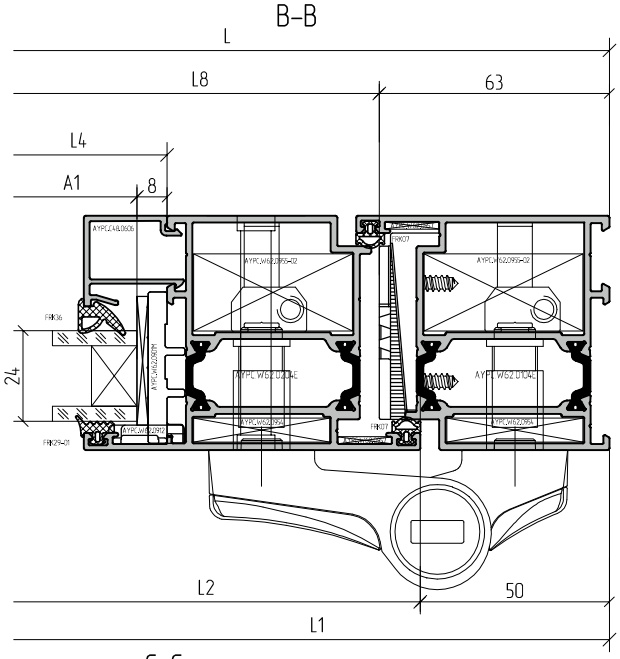

C–C

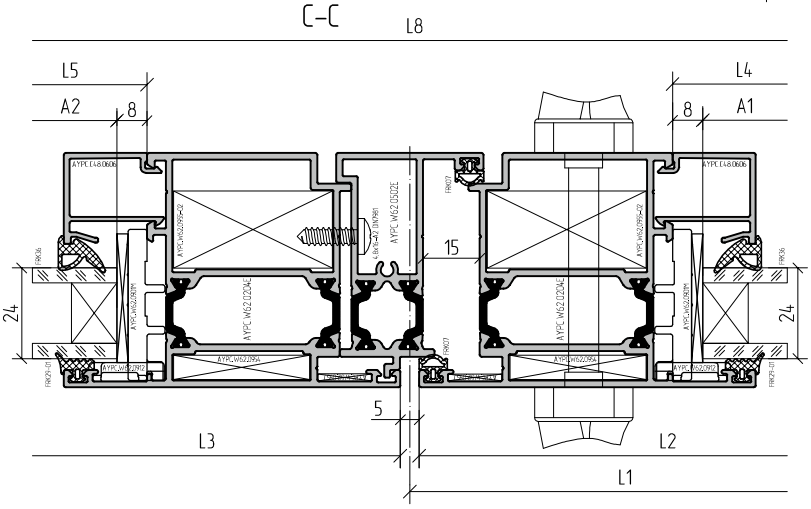

Example of calculation of exterior opening double leaf double casement door with basement

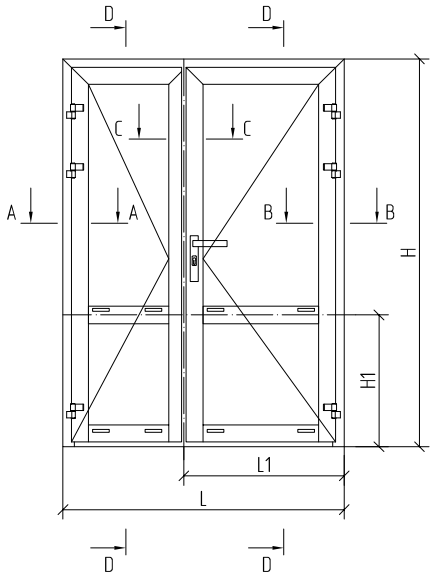

Article	Name / Image		1....
Accessories			
PB048.0750-FP	Felt sealant	L9+L10+32	1
FRK29-01	Rubber gasket	(A+A1+B+B1)x4	1
FRK170	Rubber corner		16
FRK36	Rubber gasket	(A+A1+B+B1)x4	1
FRK07	Rubber gasket	(H+L2+L3)x2+L+H2x4	1
AYPC.W62.0901M	Bearing support		16
100x32x1 (3)	Leveling support		16 (16)
AYPC.C48.0919M	Drain plug		8
AYPC.W62.0908	Double casement profile plug kit		1 kit
AYPC.W62.0909	Double casement profile plug		2
AYPC.W62.0905	Door adjoining profile plug kit		2 kit
AYPC.W62.0902	Brush holder kit		1 kit
AYPC.W62.0903	Threshold plug		2
AYPC.W62.0951-01	Transom fixing element		8
AYPC.W62.0915-01	Foamed support		4
AYPC.W62.0951-03	Transom fixing element		16
AYPC.W62.0915-03	Foamed support		4
AYPC.W62.0954	Clamping corner		6
AYPC.W62.0955-02	Clamping corner		6
AYPC.W62.0912	Plastic corner		4
AYPC.W62.0913	Plastic corner		12
AYPC.W62.0957	Leveling corner		6
3,9x13-A2 DIN7981	Self-tapping screw		2
3,9x13-A2 DIN7981	Self-tapping screw	(L7+L8)/250+(L9+L10)/250	
4,2x9,5-A2 DIN7981	Self-tapping screw		8
4,8x16-A2 DIN7981	Self-tapping screw	H3/500	

Article	Name / Image			1....
Profile				
AYPC.W62.0104E	Frame profile		L	1
			H	1
			H	1
AYPC.W62.0204E	Dooe leaf profile		L2=L1-52,5	1
			L3=L-L1-52,5	1
			H2=H-86	2
			H2=H-86	2
AYPC.W62.0502	Double casement profile		H3=H2-22	1
AYPC.W62.0106E	Frame profile (basement)		L4=L2-134	1
			L5=L3-134	1
AYPC.W62.0302E	Transom bar profile		L6=L4	1
			L7=L5	1
AYPC.W62.0801E	Threshold profile		L8=L-126	1
AYPC.W62.0803E	Door adjoining profile		L9=L2-44	1
			L10=L3-44	1
AYPC.C48.0611	Drain profile		L11=L2	1
			L12=L3	1
AYPC.C48.0606	Glass bead profile		L13=L4	4
			L14=L5	4
			H4=H-H1-179	4
			H5=H1-199	4
24 mm infill unit				
A=L2-150, B=H-H1-151				1
A=L2-150, B1=H1-171				1
A1=L3-150, B=H-H1-151				1
A1=L3-150, B1=H1-171				1

1. Select articles of glass bead profiles and gaskets depending on infill unit thickness (see part 06 – Table of glazing).

Example of interior opening single leaf door calculation

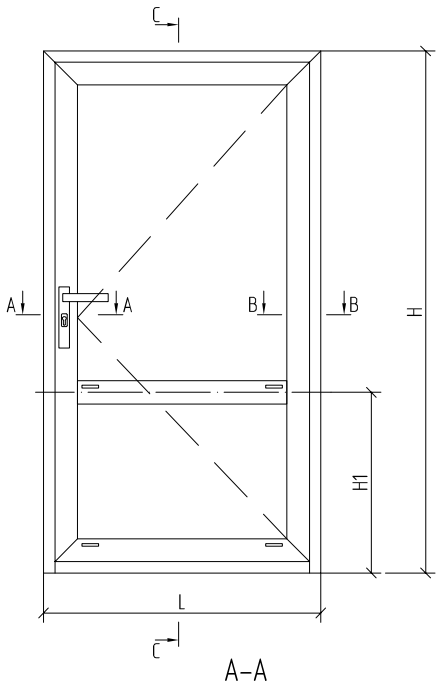

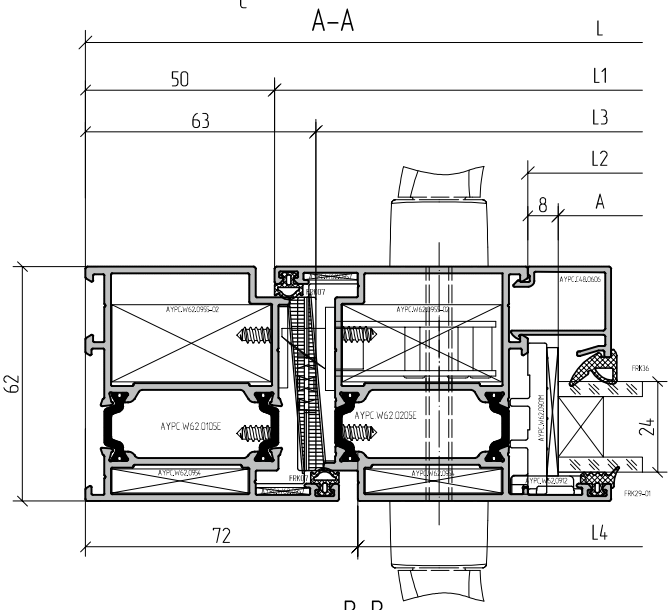

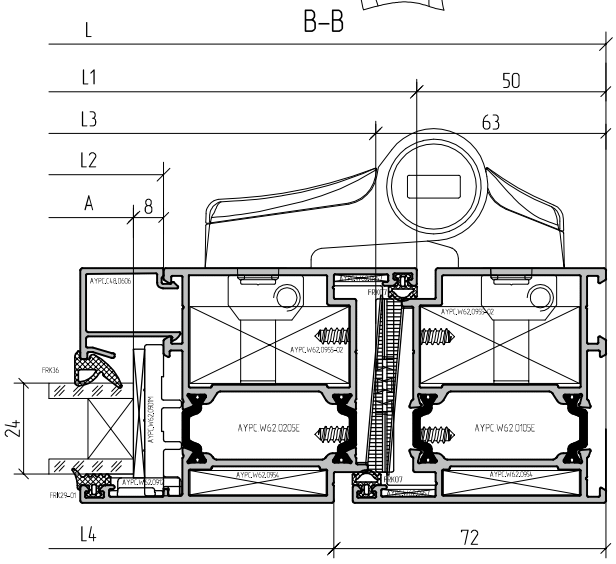

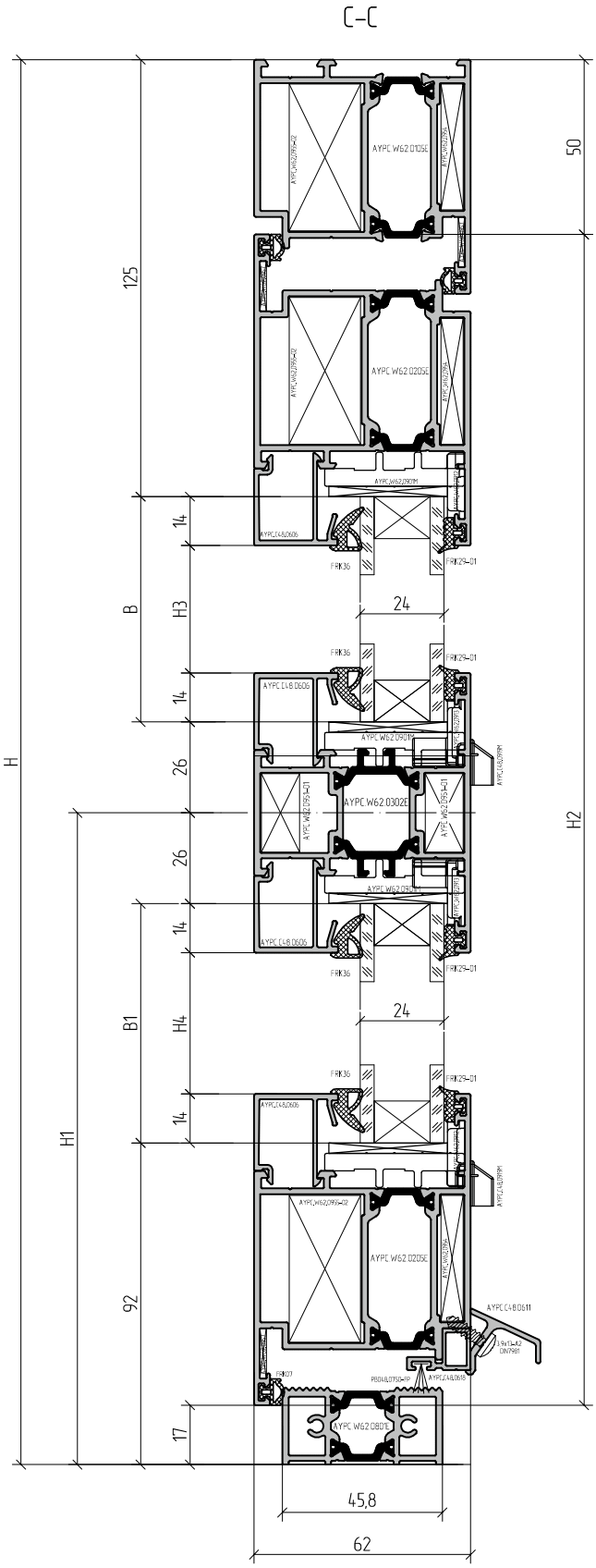

Example of interior opening single leaf door calculation

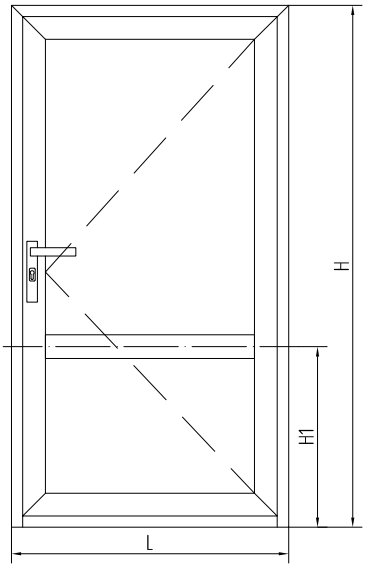

24 mm infill unit	
A=L1-150, B=H-H1-151	1
A=L1-150, B1=H1-118	1

Article	Name / Image		1....
	Profile		
AYPC.W62.0105E	Frame profile	L	1
		H	1
		H	1
AYPC.W62.0205E	Door leaf profile	L1=L-100	2
		H2=H-67	2
AYPC.W62.0302E	Transom bar profile	L2=L1-134	1
AYPC.W62.0801E	Threshold profile	L3=L-126	1
AYPC.C48.0618	Door adjoining profile	L5=L1-76	1
AYPC.C48.0611	Drain profile	L4=L1-44	1
AYPC.C48.0606	Glass bead profile	L6=L2	4
		H3=H-H1-179	2
		H4=H1-146	2
	Accessories		
PB048.0750-FP	Felt sealant	L5+28x2	1
PB048.0750-FP	Felt sealant	45	4
FRK29-01	Rubber gasket	(A+B)x2+(A+B1)x2	1
FRK170	Rubber corner		8
FRK36	Rubber gasket	(A+B)x2+(A+B1)x2	1
FRK07	Rubber gasket	L+Hx2+(L1+H2)x2	1
AYPC.W62.0901M	Bearing support		8
100x32x1 (3)	Leveling support		8 (8)
AYPC.C48.0919M	Drain plug		4
AYPC.C48.0909	Door adjoining profile plug		2
AYPC.W62.0902	Brush holder kit		2 kit
AYPC.W62.0903	Threshold plug		2
AYPC.W62.0951-01	Transom fixing element		4
AYPC.W62.0915-01	Foamed support		2
AYPC.W62.0954	Clamping corner		6
AYPC.W62.0955-02	Clamping corner		6
AYPC.W62.0912	Plastic corner		4
AYPC.W62.0913	Plastic corner		4
AYPC.W62.0957	Leveling corner		6
3,9x13-A2 DIN7981	Self-tapping screw	L4/250	
4,2x9,5-A2 DIN7981	Self-tapping screw		12
3,9x25-A2 DIN7982	Self-tapping screw	L5/250	

1. Select articles of glass bead profiles and gaskets depending on infill unit thickness (see part 06 – Table of glazing).
2. For profiles marked * the subsequent machining is required (see p. 10 – Profiles machining and assemblage).

Example of calculation of interior opening single leaf door with basement

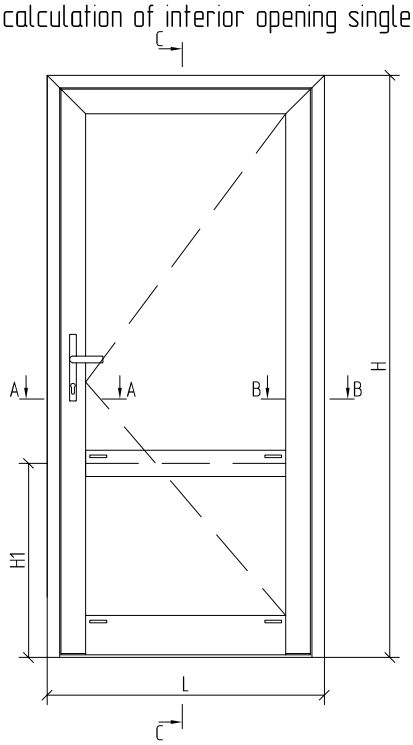

A–A

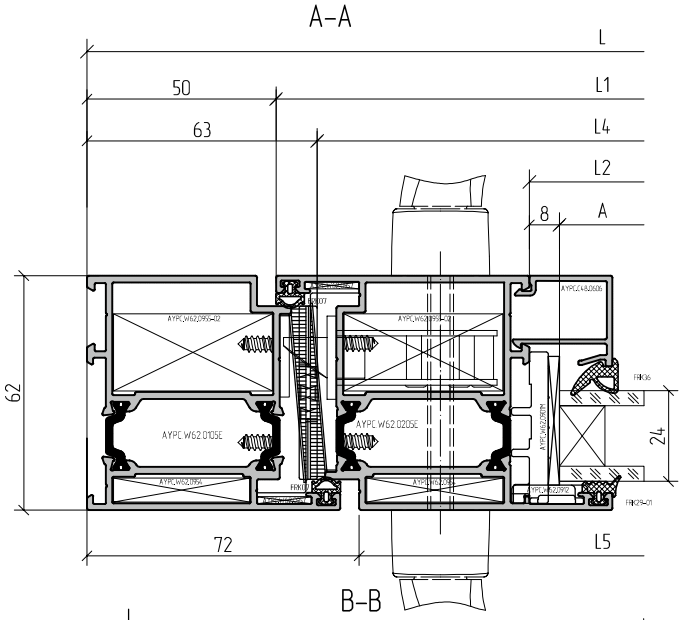

B–B

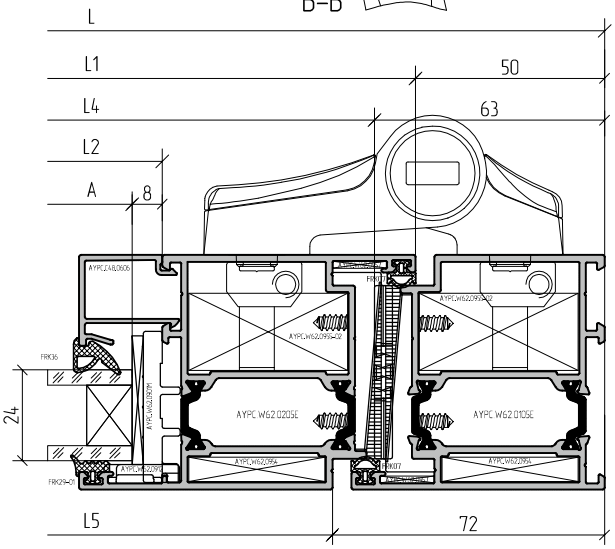

C–C

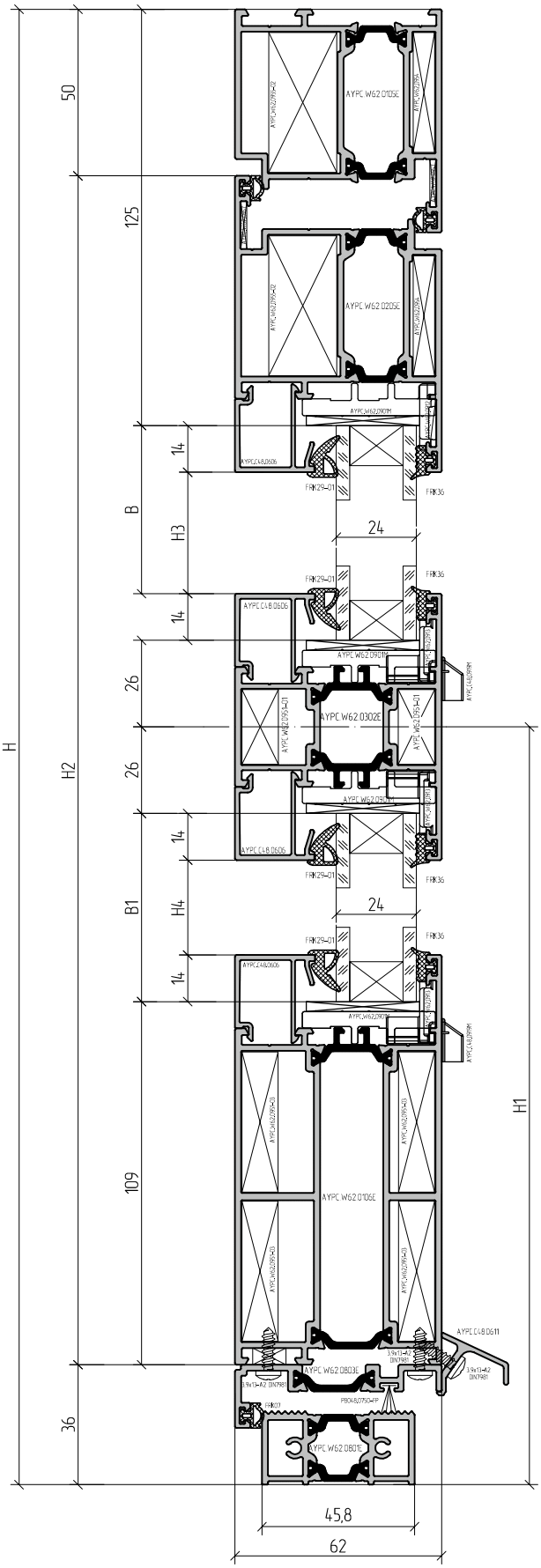

Example of calculation of interior opening single leaf door with basement

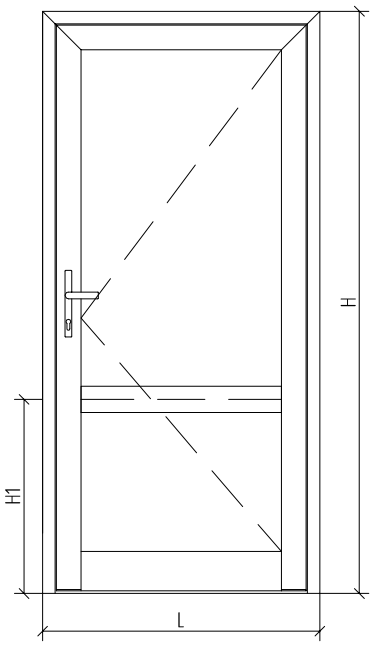

24 mm infill unit	
A=L1-150, B=H-H1-151	1
A=L1-150, B1=H1-171	1

Article	Name / Image		1...
	Profile		
AYPC.W62.0105E	Frame profile	L	1
		H	1
		H	1
AYPC.W62.0205E	Door leaf profile	L1=L-100	1
		H2=H-86	1
		H2=H-86	1
AYPC.W62.0106E	Frame profile (basement)	L2=L1-134	1
AYPC.W62.0302E	Transom bar profile	L3=L2	1
AYPC.W62.0801E	Threshold profile	L4=L-126	1
AYPC.W62.0803E	Door adjoining profile	L5=L1 *	1
AYPC.C48.0611	Drain profile	L6=L1-44	1
AYPC.C48.0606	Glass bead profile	L7=L2	4
		H3=H-H1-179	2
		H4=H1-199	2
	Accessories		
PB048.0750-FP	Felt sealant	L5+16	1
PB048.0750-FP	Felt sealant	45	4
FRK29-01	Rubber gasket	(A+B)x2+(A+B1)x2	1
FRK170	Rubber corner		8
FRK36	Rubber gasket	(A+B)x2+(A+B1)x2	1
FRK07	Rubber gasket	L+Hx2+(L1+H2)x2	1
AYPC.W62.0901M	Bearing support		8
100x32x1 (3)	Leveling support		8 (8)
AYPC.C48.0919M	Drain plug		4
AYPC.W62.0902	Brush holder kit		2 kit
AYPC.W62.0903	Threshold plug		2
AYPC.W62.0951-01	Transom fixing element		4
AYPC.W62.0915-01	Foamed support		2
AYPC.W62.0951-03	Transom fixing element		8
AYPC.W62.0915-03	Foamed support		2
AYPC.W62.0954	Clamping corner		4
AYPC.W62.0955-02	Clamping corner		4
AYPC.W62.0912	Plastic corner		2
AYPC.W62.0913	Plastic corner		6
AYPC.W62.0957	Leveling corner		4
3,9x13-A2 DIN7981	Self-tapping screw	(L5/250)x3	
4,2x9,5-A2 DIN7981	Self-tapping screw		12

1. Machining is necessary for the profiles marked with *. Machining data is available on request.
2. Select articles of glass bead profiles and gaskets depending on infill unit thickness (see part 06 – Table of glazing).

Example of interior opening double leaf door calculation

See sections on p.09.34

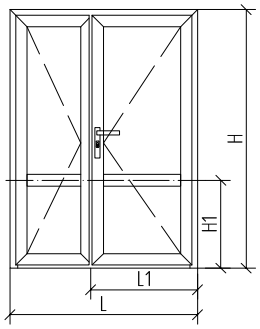

A–A

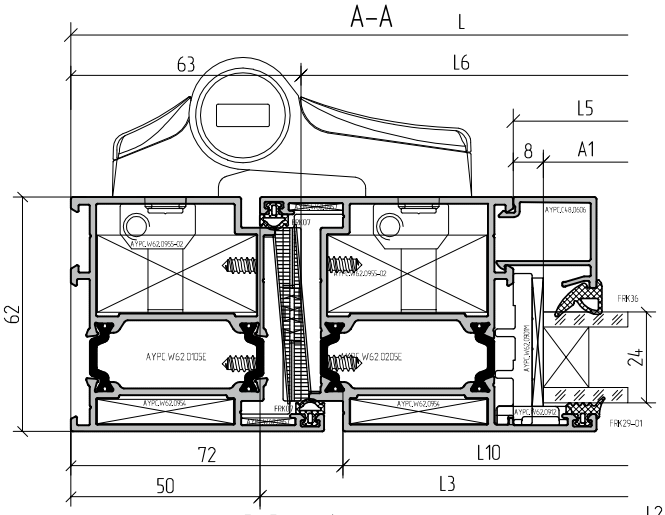

C–C

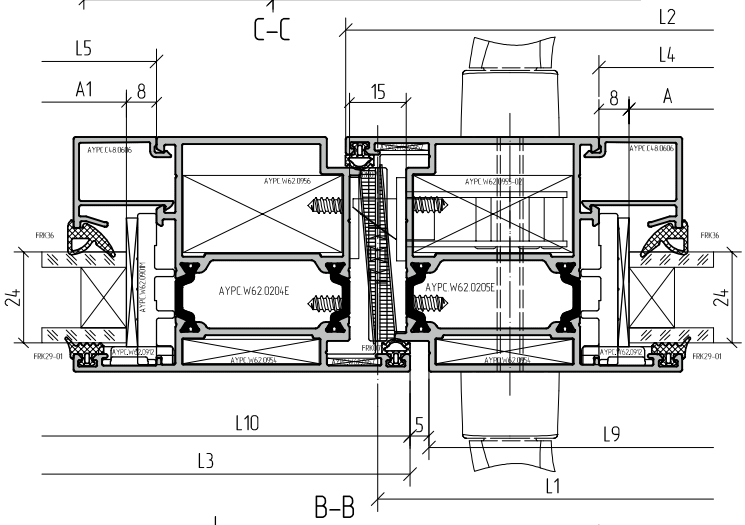

B–B

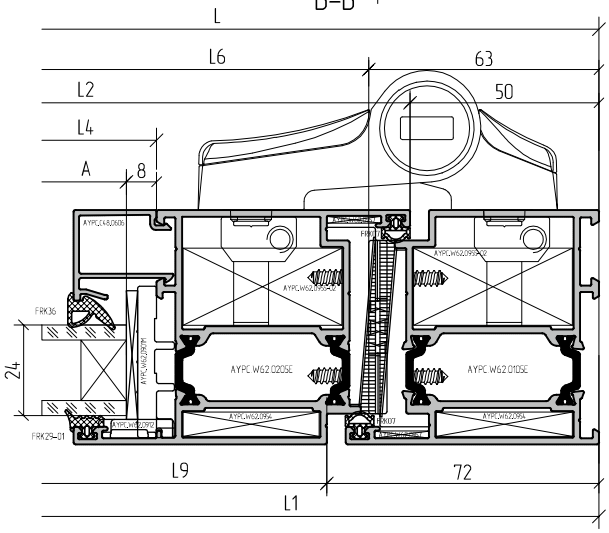

D–D

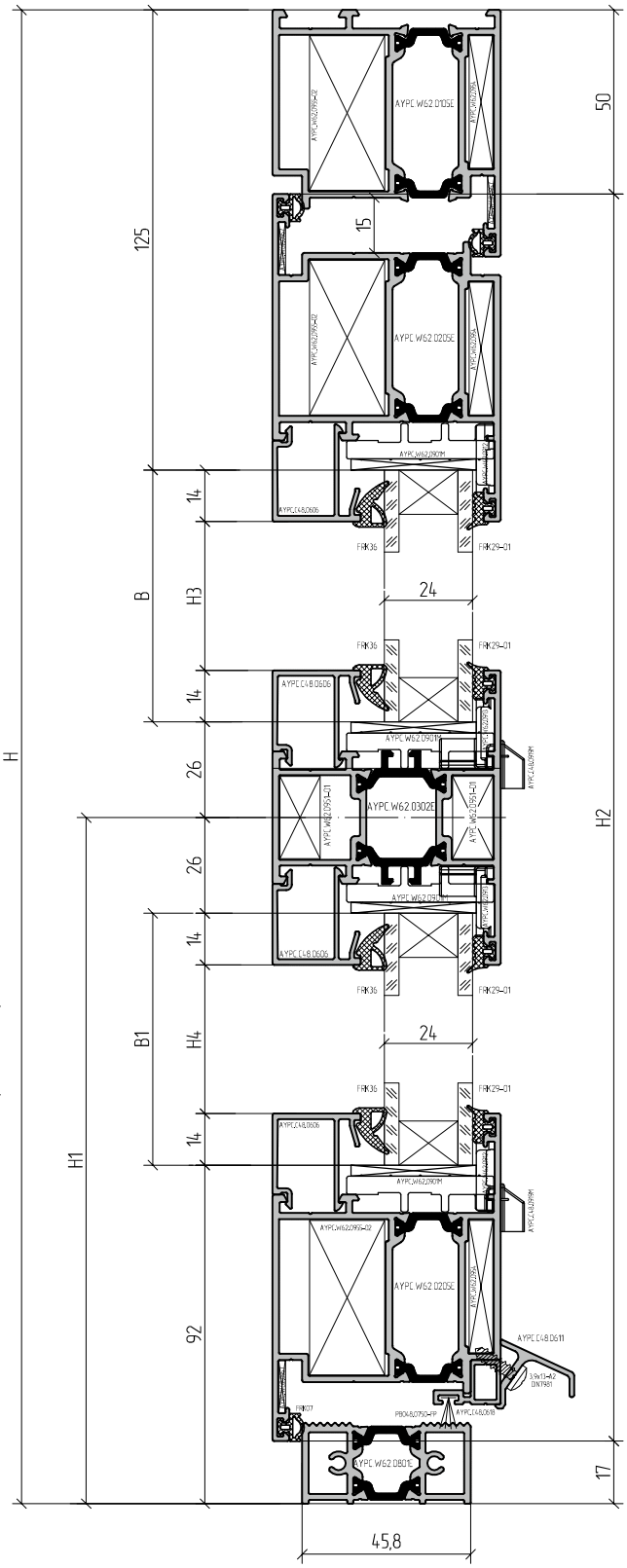

Example of interior opening double leaf door calculation

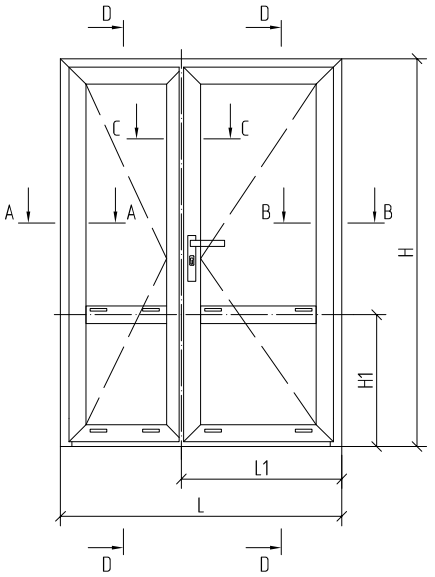

Article	Name / Image	L	1....
Accessories			
PB048.0750-FP	Felt sealant	L7+L8+28x4	1
PB048.0750-FP	Felt sealant	45	6
FRK29-01	Rubber gasket	(A+A1+B+B1)x4	1
FRK170	Rubber corner		16
FRK36	Rubber gasket	(A+A1+B+B1)x4	1
FRK07	Rubber gasket	(H+L2+L3)x2+L+4H2	1
AYPC.W62.0901M	Bearing support		16
100x32x1 (3)	Leveling support		16 (16)
AYPC.C48.0919M	Drain plug		8
AYPC.C48.0909	Door adjoining profile plug		4
AYPC.W62.0902	Brush holder kit		3 kit
AYPC.W62.0903	Threshold plug		2
AYPC.W62.0951-01	Transom fixing element		8
AYPC.W62.0915-01	Foamed support		4
AYPC.W62.0954	Clamping corner		10
AYPC.W62.0955-02	Clamping corner		8
AYPC.W62.0956	Clamping corner		2
AYPC.W62.0912	Plastic corner		8
AYPC.W62.0913	Plastic corner		8
AYPC.W62.0957	Leveling corner		5
AYPC.C48.0906	Plug		1
AYPC.C48.0907	Plug		2
2,9x9,5-A2 DIN7982	Self-tapping screw		3
3,9x13-A2 DIN7981	Self-tapping screw	L9/250+L10/250	
4,2x9,5-A2 DIN7981	Self-tapping screw		16
3,9x25-A2 DIN7982	Self-tapping screw	L7/250+L8/250	

Article	Name / Image			1....
Profile				
AYPC.W62.0105E	Frame profile		L	1
			H	1
			H	1
AYPC.W62.0205E	Door leaf profile		L2=L1-41,5	2
			H2=H-67	3
			L3=L-L1-41,5 *	2
AYPC.W62.0204E	Door leaf profile		H2=H-67 *	1
AYPC.W62.0302E	Transom bar profile		L4=L2-134	1
			L5=L3-134	1
AYPC.W62.0801E	Threshold profile		L6=L-126	1
AYPC.C48.0618	Door adjoining profile		L7=L2-76	1
			L8=L3-54	1
AYPC.C48.0611	Drain profile		L9=L2-44	1
			L10=L3-22	1
AYPC.C48.0606	Glass bead profile		L11=L4	4
			L12=L5	4
			H3=H-H1-179	4
			H4=H1-146	4

24 mm infill unit	
A=L2-150, B=H-H1-151 / A1=L3-150, B=H-H1-151	1 / 1
A=L2-150, B1=H1-118 / A1=L3-150, B1=H1-118	1 / 1

1. Select articles of glass bead profiles and gaskets depending on infill unit thickness (see part 06 – Table of glazing).
2. For profiles marked * the subsequent machining is required (see p. 10 – Profiles machining and assemblage).

Example of calculation of interior opening double leaf door with basement

See sections on p.09.36

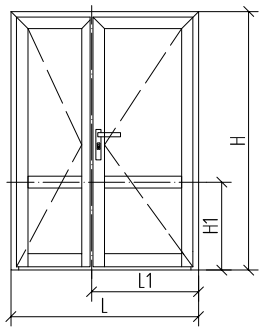

A–A

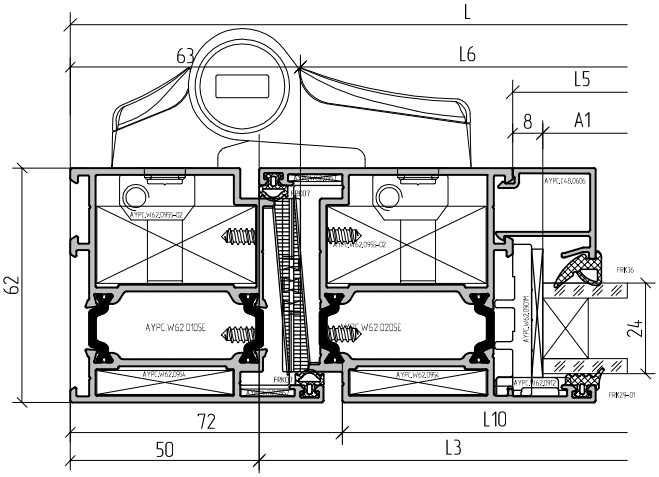

C–C

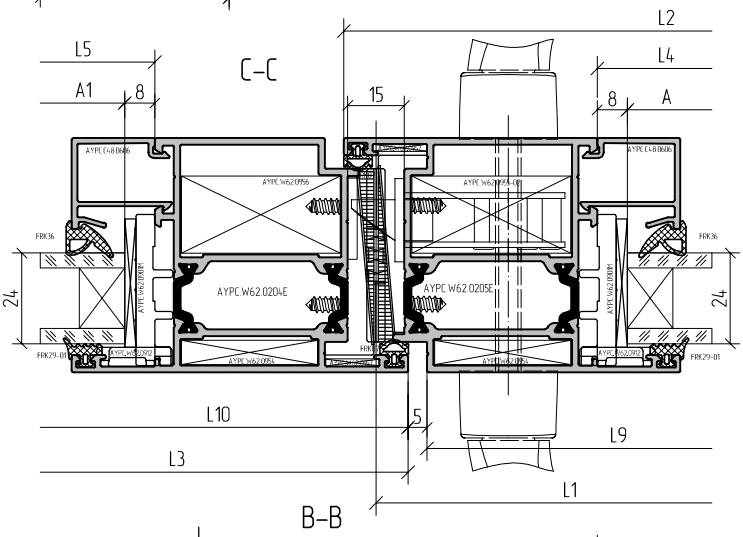

B–B

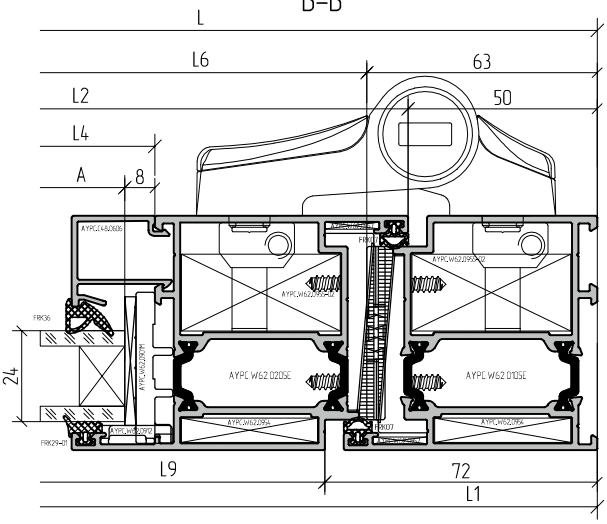

D–D

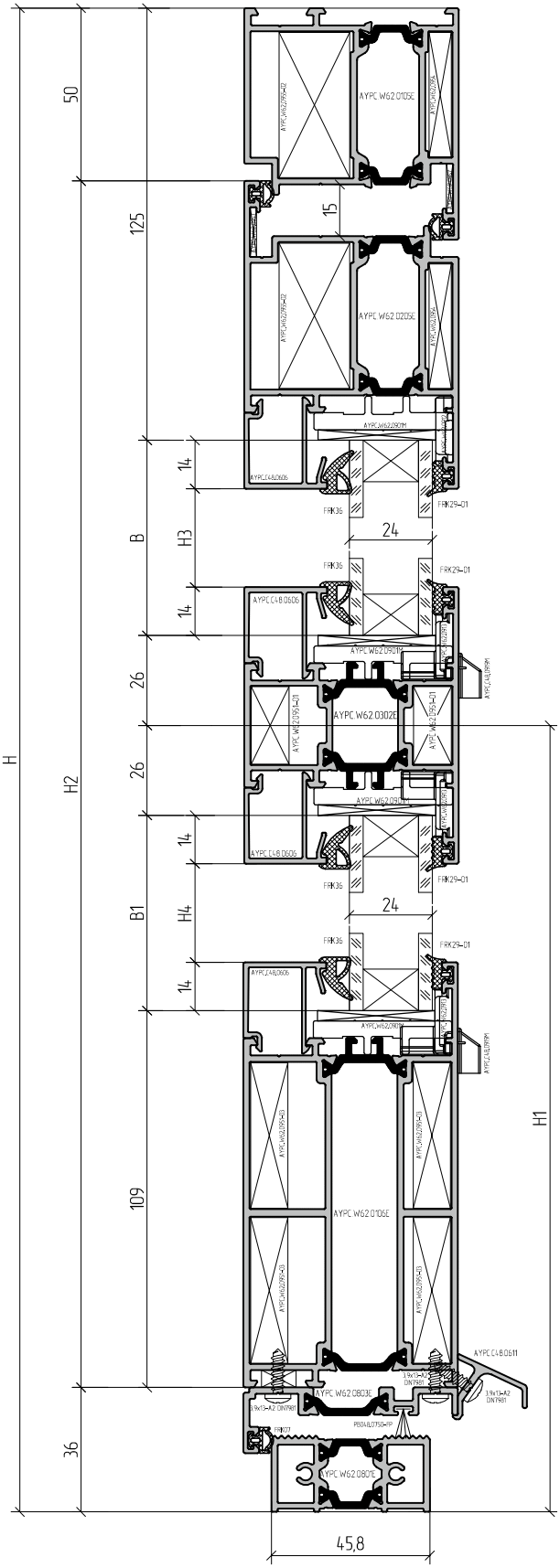

Example of calculation of interior opening double leaf door with basement

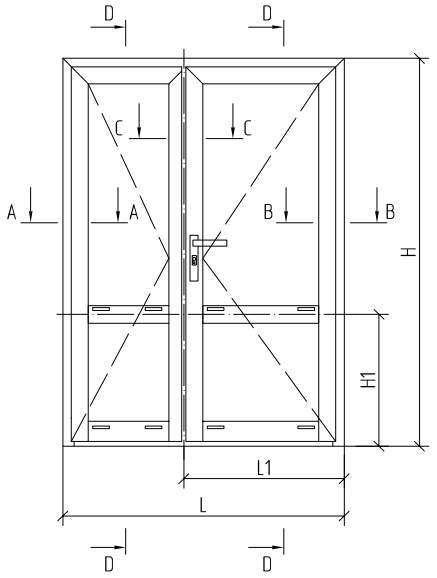

Article	Name / Image	L	1....
Accessories			
PB048.0750-FP	Felt sealant	L7+L8+28x4	1
PB048.0750-FP	Felt sealant	45	6
FRK29-01	Rubber gasket	(A+A1+B+B1)x4	1
FRK170	Rubber corner		16
FRK36	Rubber gasket	(A+A1+B+B1)x4	1
FRK07	Rubber gasket	(H+L2+L3)x2+L+4H2	1
AYPC.W62.0901M	Bearing support		16
100x32x1 (3)	Leveling support		16 (16)
AYPC.C48.0919M	Drain plug		8
AYPC.W62.0902	Brush holder kit		3 kit
AYPC.W62.0903	Threshold plug		2
AYPC.W62.0951-01	Transom fixing element		8
AYPC.W62.0915-01	Foamed support		4
AYPC.W62.0951-03	Transom fixing element		16
AYPC.W62.0915-03	Foamed support		4
AYPC.W62.0954	Clamping corner		6
AYPC.W62.0955-02	Clamping corner		5
AYPC.W62.0956	Clamping corner		1
AYPC.W62.0912	Plastic corner		4
AYPC.W62.0913	Plastic corner		12
AYPC.W62.0957	Leveling corner		5
AYPC.C48.0907	Plug		2
2,9x9,5-A2 DIN7982	Self-tapping screw		3
3,9x13-A2 DIN7981	Self-tapping screw	L9/250+L10/250	
4,2x9,5-A2 DIN7981	Self-tapping screw		16

Article	Name / Image		L	1....
Profile				
AYPC.W62.0105E	Frame profile		L	1
			H	1
			H	1
AYPC.W62.0205E	Door leaf profile		L2=L1-41,5	1
			H2=H-86	1
			H2=H-86	2
			L3=L-L1-41,5 *	1
AYPC.W62.0204E	Door leaf profile		H2=H-86 *	1
AYPC.W62.0106E	Frame profile (basement)		L4=L2-134	1
			L5=L3-134	1
AYPC.W62.0302E	Transom bar profile		L6=L2-134	1
			L7=L3-134	1
AYPC.W62.0801E	Threshold profile		L8=L-126	1
AYPC.W62.0803E	Door adjoining profile		L9=L2 *	1
			L10=L3 *	1
AYPC.C48.0611	Drain profile		L11=L2-44	1
			L12=L3-22	1
AYPC.C48.0606	Glass bead profile		L13=L4	4
			L14=L5	4
			H3=H-H1-179	4
			H4=H1-199	4

24 mm infill unit	
A=L2-150, B=H-H1-151 / A1=L3-150, B=H-H1-151	1 / 1
A=L2-150, B1=H1-171 / A1=L3-150, B1=H1-171	1 / 1

1. Select articles of glass bead profiles and gaskets depending on infill unit thickness (see part 06 – Table of glazing).
2. Machining is necessary for the profiles marked with *. Machining data is available on request.

Example of a framing calculation with an exterior opening single leaf door

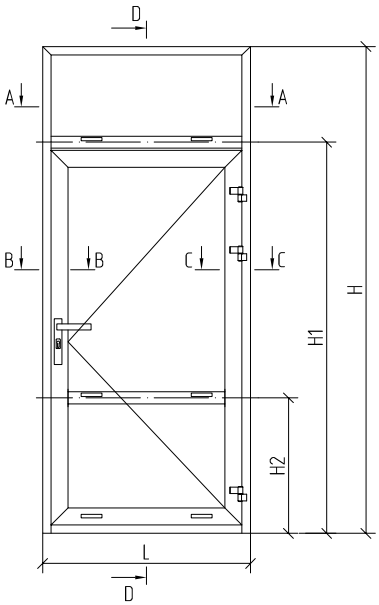

See sections on p.09.38

B–B

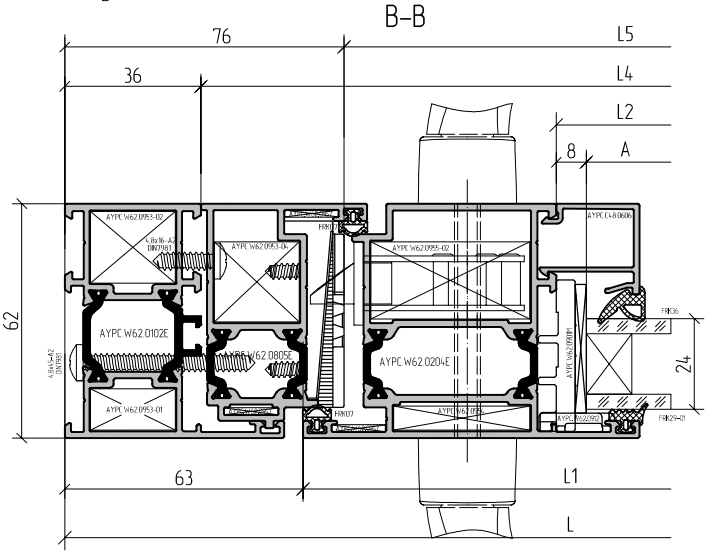

C–C

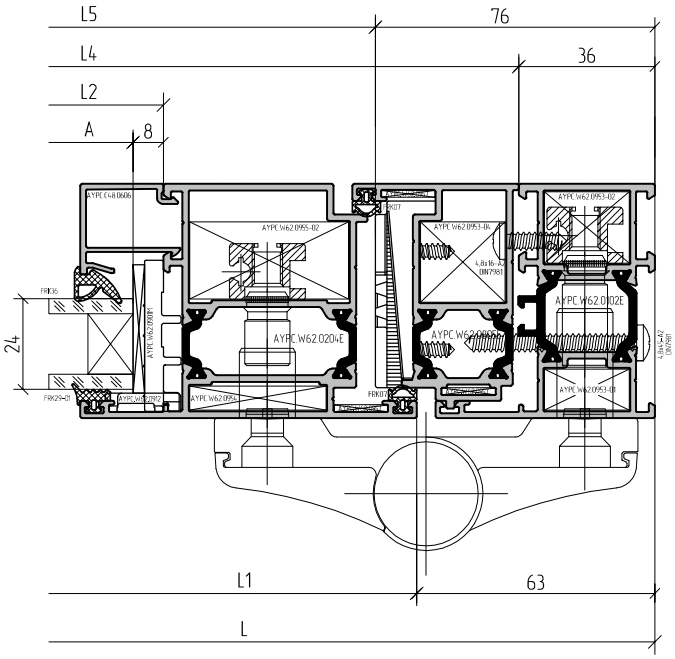

D–D

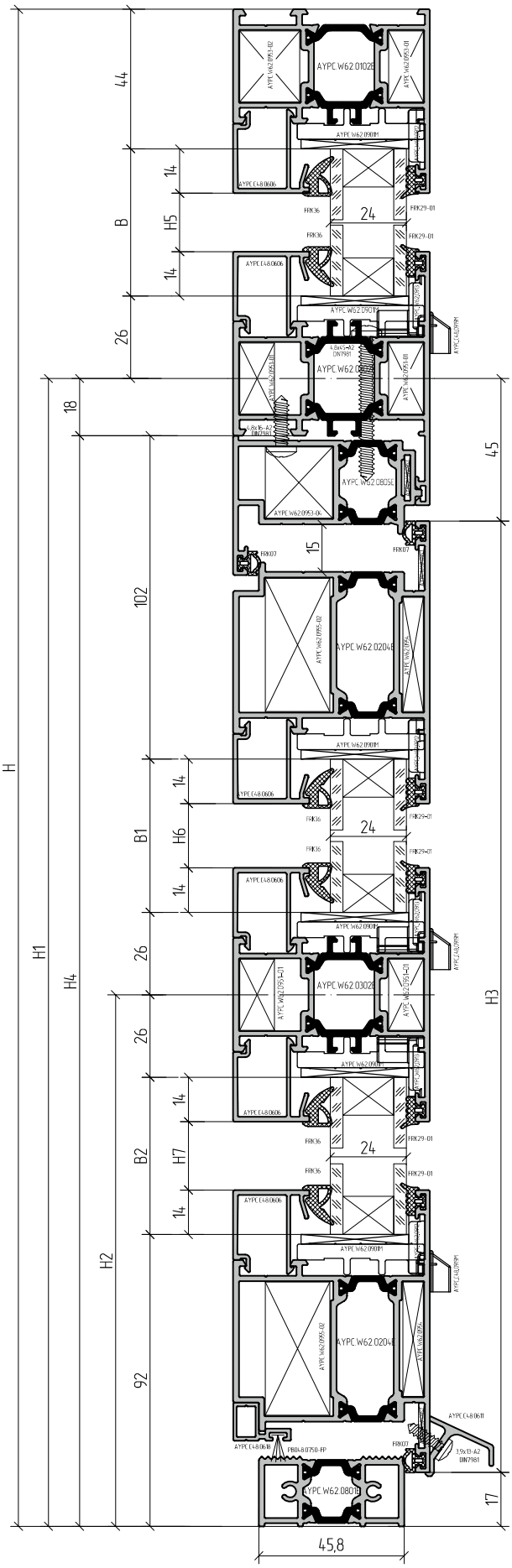

Example of a framing calculation with an exterior opening single leaf door

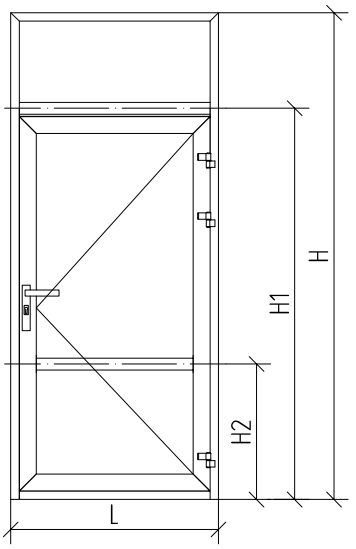

Article	Name / Image		L	1....
Profile				
AYPC.W62.0102E	Frame profile		L	1
			H	1
			H	1
AYPC.W62.0204E	Door leaf profile		L1=L-126	2
			H3=H1-62	2
AYPC.W62.0302E	Transom bar profile		L2=L1-134	1
			L3=L-72	1
AYPC.W62.0805E	Auxiliary door profile		L4=L-72	1
			H4=H1-18	1
			H4=H1-18	1
AYPC.W62.0801E	Threshold profile		L5=L-152	1
AYPC.C48.0618	Door adjoining profile		L6=L1-76	1
AYPC.C48.0611	Drain profile		L7=L1	1
AYPC.C48.0606	Glass bead profile		L8=L2	4
			L9=L3	2
			H5=H-H1-98	2
			H6=H4-H2-156	2
			H7=H2-146	2

Article	Name / Image	L	1....
Accessories			
PB048.0750-FP	Felt sealant	L6+28x2	1
FRK29-01	Rubber gasket	4xA+(B1+B2+A1+B)x2	1
FRK170	Rubber corner		12
FRK36	Rubber gasket	4xA+(B1+B2+A1+B)x2	1
FRK07	Rubber gasket	(L1+H3+H4)x2+L4	1
AYPC.W62.0901M	Bearing support		12
100x32x1 (3)	Leveling support		12 (12)
AYPC.C48.0919M	Drain plug		6
AYPC.C48.0909	Door adjoining profile plug		2
AYPC.W62.0902	Brush holder kit		1 kit
AYPC.W62.0903	Threshold plug		2
AYPC.W62.0951-01	Transom fixing element		8
AYPC.W62.0915-01	Foamed support		4
AYPC.W62.0953-01	Clamping corner		2
AYPC.W62.0953-02	Clamping corner		2
AYPC.W62.0954	Clamping corner		4
AYPC.W62.0955-02	Clamping corner		4
AYPC.W62.0953-04	Clamping corner		2
AYPC.W62.0912	Plastic corner		6
AYPC.W62.0913	Plastic corner		6
AYPC.W62.0957	Leveling corner		8
3,9x13-A2 DIN7981	Self-tapping screw	L7/250	
4,2x9,5-A2 DIN7981	Self-tapping screw		8
3,9x25-A2 DIN7982	Self-tapping screw	L6/250	
4,8x16-A2 DIN7981	Self-tapping screw	L4/500+(H4/500)x2	
4,8x45-A2 DIN7981	Self-tapping screw	L4/500+(H4/500)x2	

24 mm infill unit	
A=L1-150, B2=H2-118	1
A=L1-150, B1=H4-H2-128	1
A1=L-88, B=H-H1-70	1

A-A

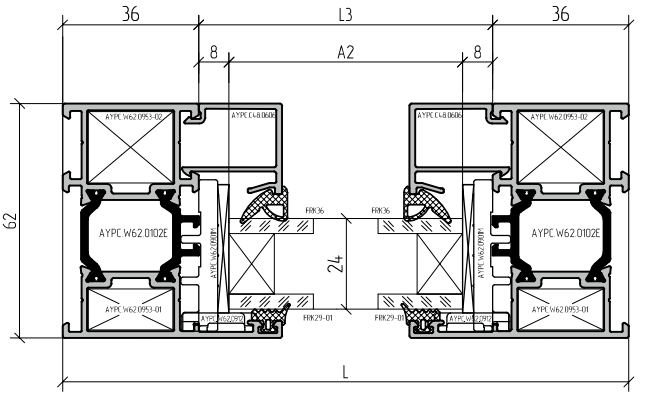

Select articles of glass bead profiles and gaskets depending on infill unit thickness (see part 06 – Table of glazing).

Example of exterior opening single leaf door calculation

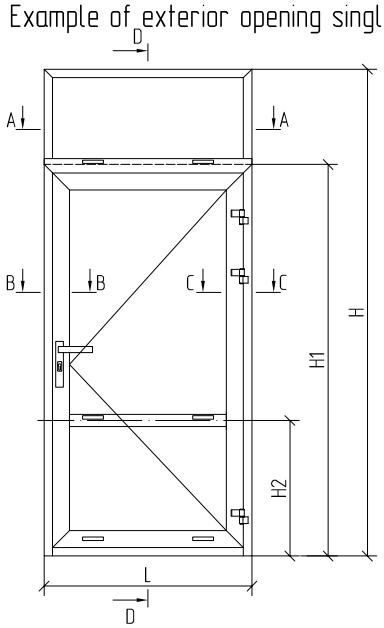

See sections on p.09.40

B–B

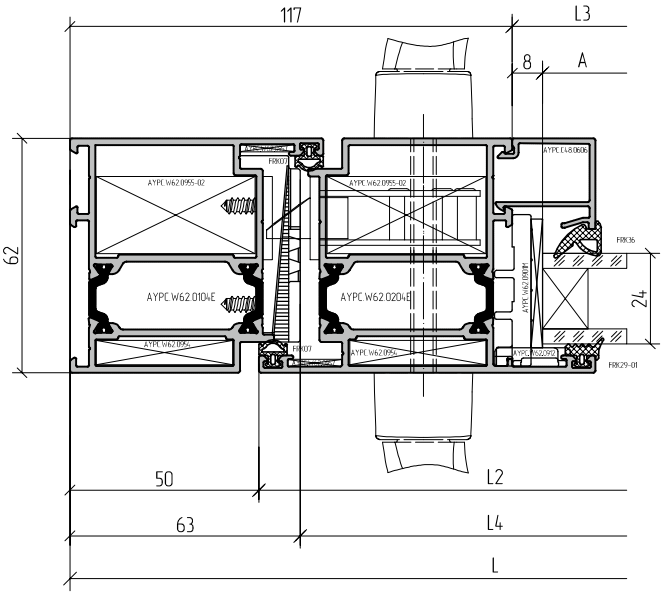

C–C

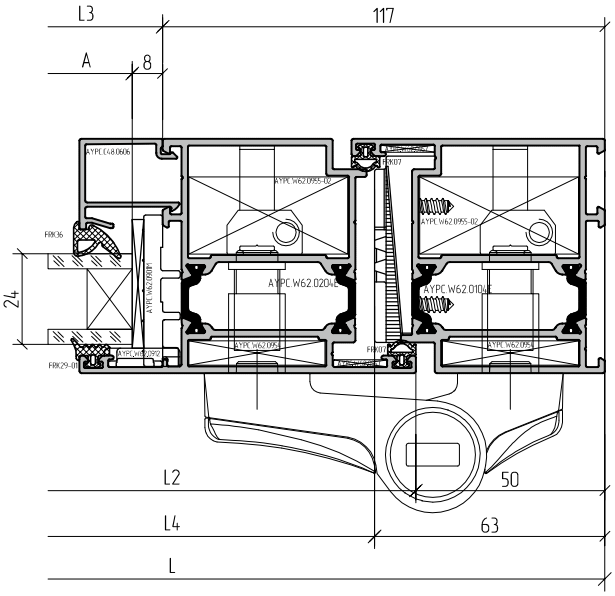

D–D

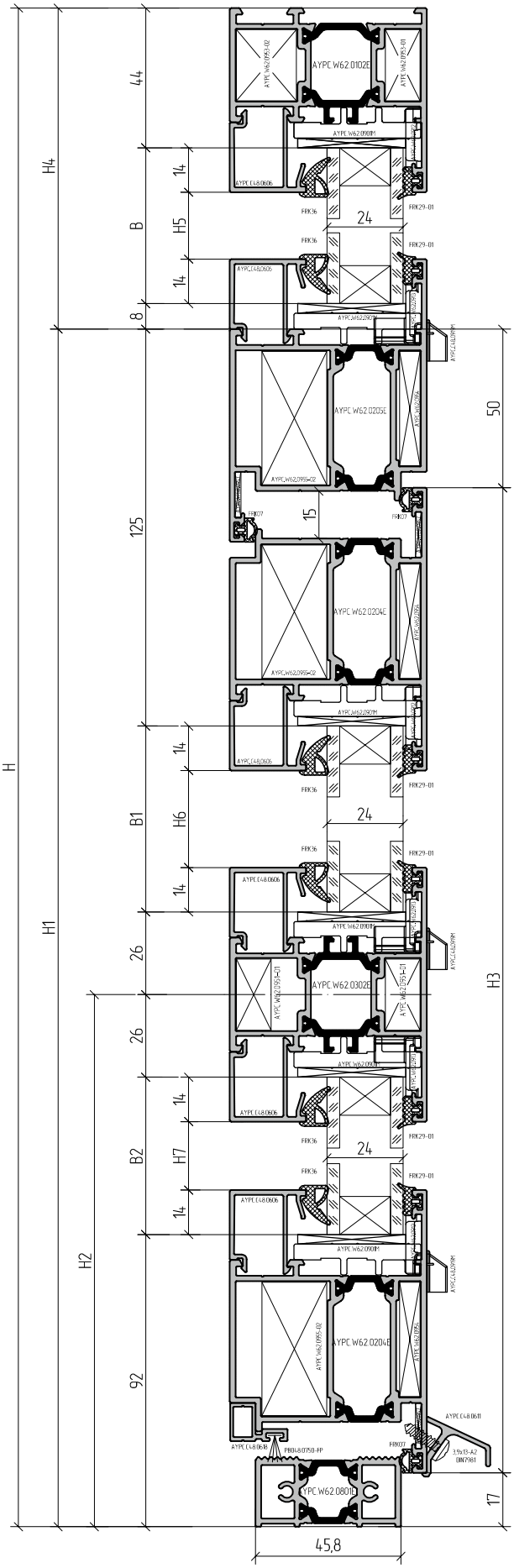

Example of exterior opening single leaf door calculation

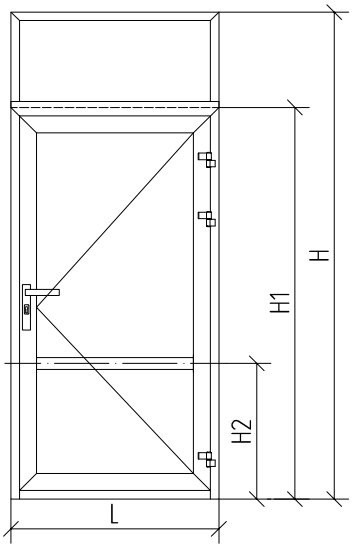

Article	Name / Image		L	1....
	Accessories			
PB048.0750-FP	Felt sealant		L5+28x2	1
FRK29-01	Rubber gasket		4xA+(B1+B2+A1+B)x2	1
FRK170	Rubber corner			12
FRK36	Rubber gasket		4xA+(B1+B2+A1+B)x2	1
FRK07	Rubber gasket		L1+H1x2+H3x2+L2x2	1
AYPC.W62.0901M	Bearing support			12
100x32x1 (3)	Leveling support			12 (12)
AYPC.C48.0919M	Drain plug			6
AYPC.C48.0909	Door adjoining profile plug			2
AYPC.W62.0902	Brush holder kit			1 kit
AYPC.W62.0903	Threshold plug			2
AYPC.W62.0951-01	Transom fixing element			8
AYPC.W62.0915-01	Foamed support			4
AYPC.W62.0953-01	Clamping corner			2
AYPC.W62.0953-02	Clamping corner			2
AYPC.W62.0954	Clamping corner			6
AYPC.W62.0955-02	Clamping corner			6
AYPC.W62.0912	Plastic corner			6
AYPC.W62.0913	Plastic corner			6
AYPC.W62.0957	Leveling corner			6
3,9x13-A2 DIN7981	Self-tapping screw		L6/250	
4,2x9,5-A2 DIN7981	Self-tapping screw			8
3,9x25-A2 DIN7982	Self-tapping screw		L5/250	

Article	Name / Image		L	1....
	Profile			
AYPC.W62.0102E	Frame profile		L	1
			H4=H-H1 *	1
			H4=H-H1 *	1
AYPC.W62.0104E	Frame profile		H1	1
			H1	1
AYPC.W62.0204E	Door leaf profile		H3=H1-67	2
			L2=L-100	1
AYPC.W62.0205E	Door leaf profile		L1=L+44 *	1
AYPC.W62.0302E	Transom bar profile		L3=L-234	1
AYPC.W62.0801E	Threshold profile		L4=L-126	1
AYPC.C48.0618	Door adjoining profile		L5=L-176	1
AYPC.C48.0611	Drain profile		L6=L-100	1
AYPC.C48.0606	Glass bead profile		L7=L3	4
			L8=L-72	2
			H5=H-H1-80	2
			H6=H1-H2-179	2
			H7=H2-146	2

24 mm infill unit	
A=L-250, B2=H2-118	1
A=L-250, B1=H1-H2-151	1
A1=L-88, B=H-H1-52	1

A-A

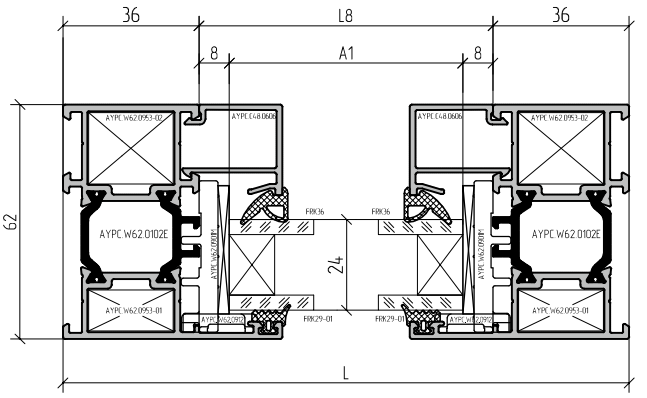

1. Select articles of glass bead profiles and gaskets depending on infill unit thickness (see part 06 – Table of glazing).
2. For profiles marked * the subsequent machining is required (see p. 10 – Profiles machining and assemblage).

ALUTECH ALT W62
WINDOW
AND DOOR SYSTEM

PROFILES MACHINING AND ASSEMBLAGE

10

AYPC.W62.0101E profile corner connection by clamping and using 5x10 pins

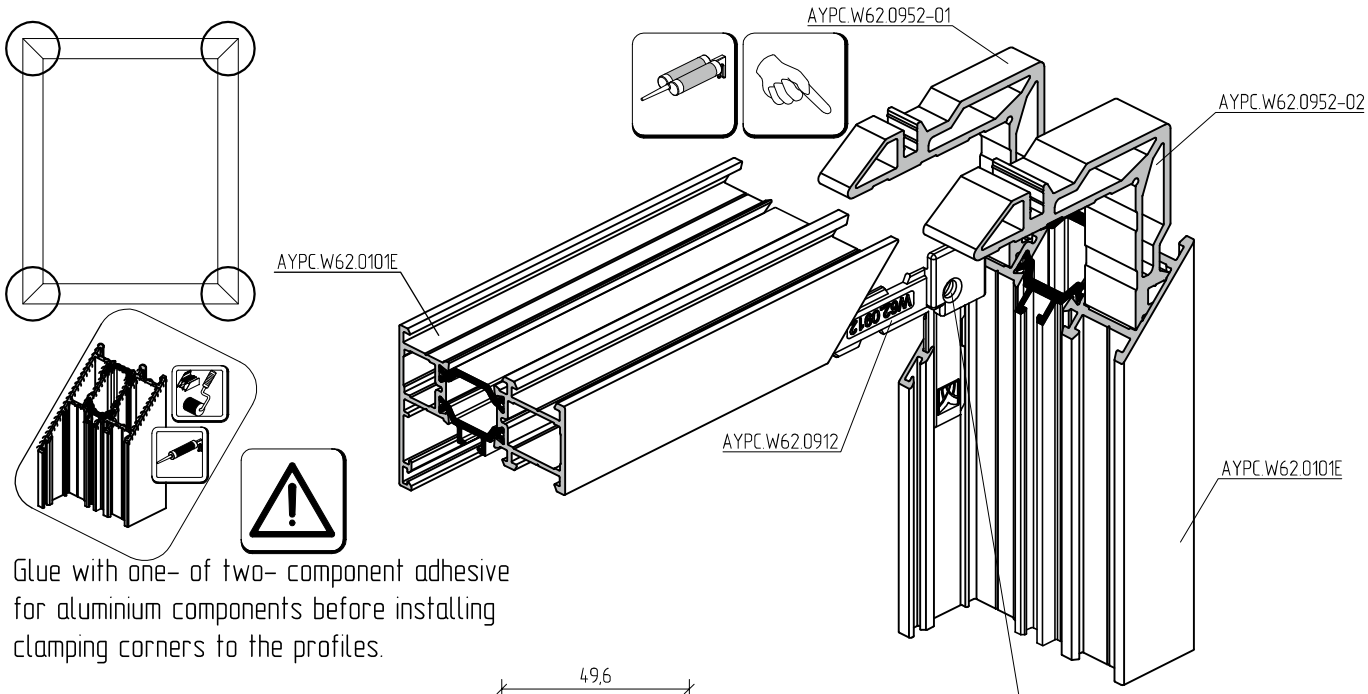

Glue with one- of two- component adhesive for aluminium components before installing clamping corners to the profiles.

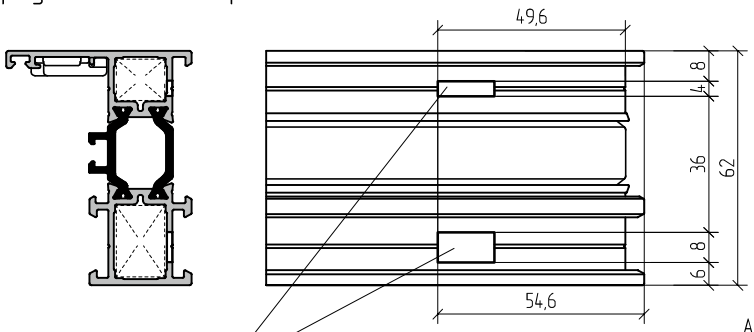

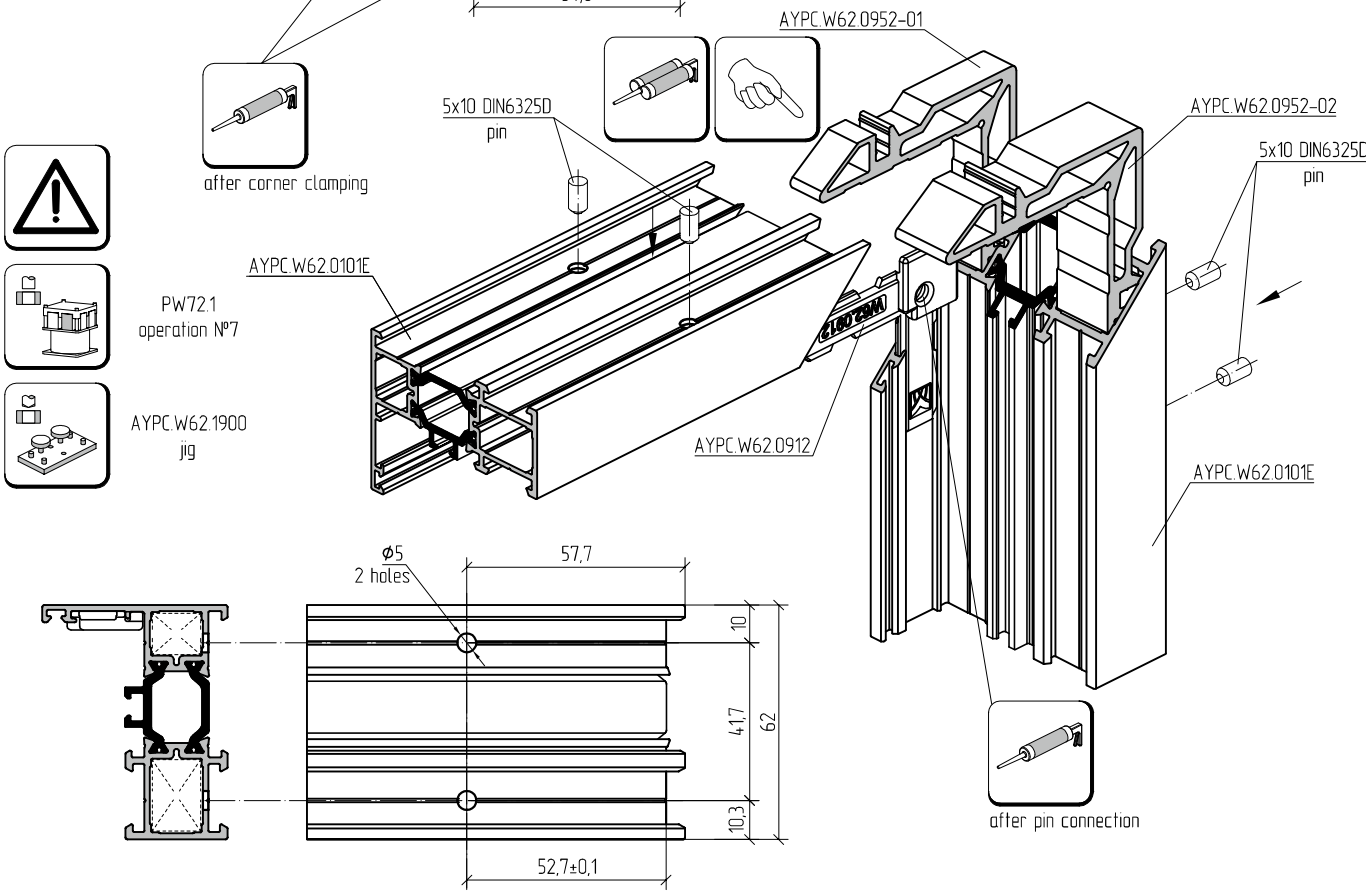

AYPC.W62.0102E profile corner connection by clamping and using 5x10 pins for windows with PVC groove

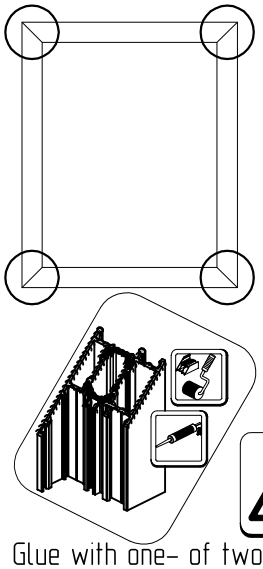

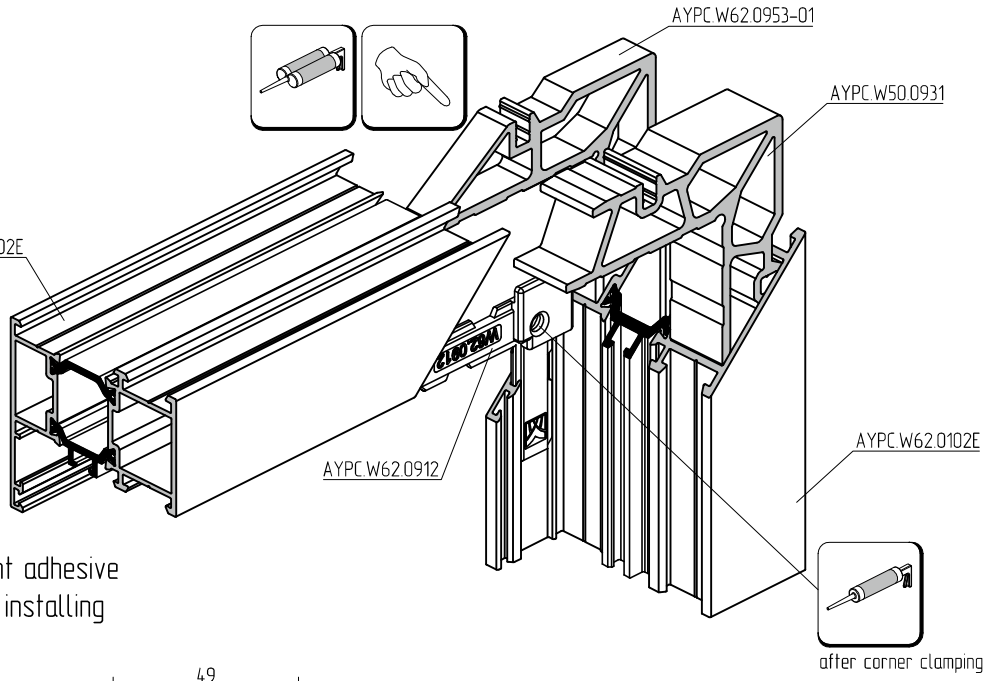

Glue with one- of two- component adhesive for aluminium components before installing clamping corners to the profiles.

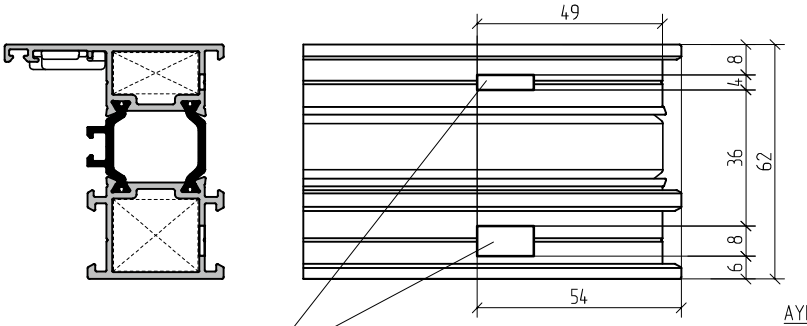

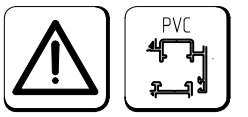

For PVC groove windows use only AYPC.W62.0102E, AYPC.W62.0302E profiles

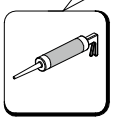

after corner clamping

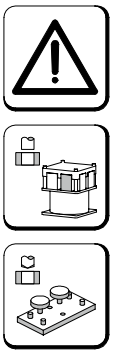

PW72.1
operation N°7

AYPC.W62.1900
jig

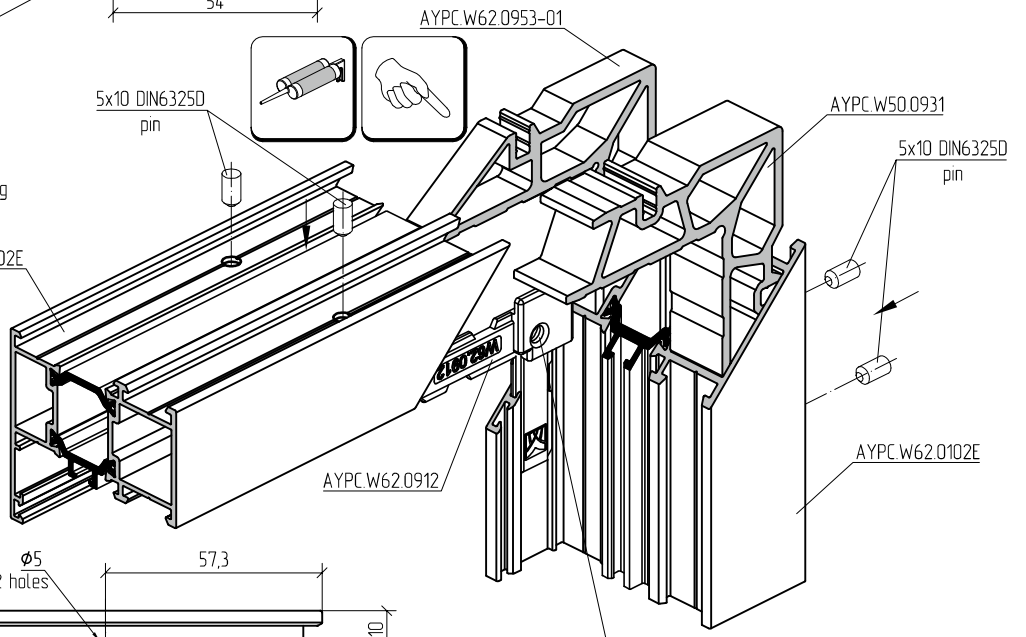

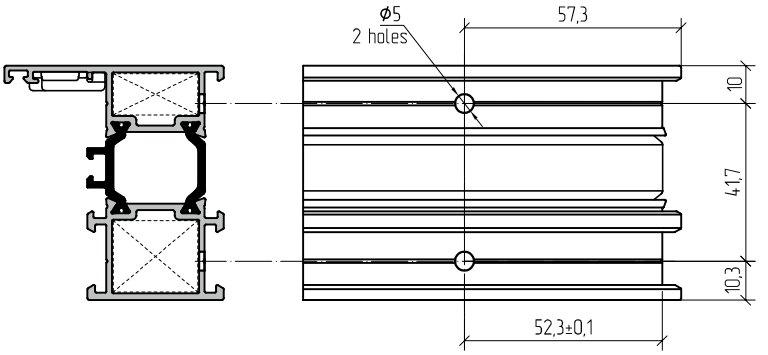

AYPC.W62.0106E profile corner connection by clamping and using 5x10 pins

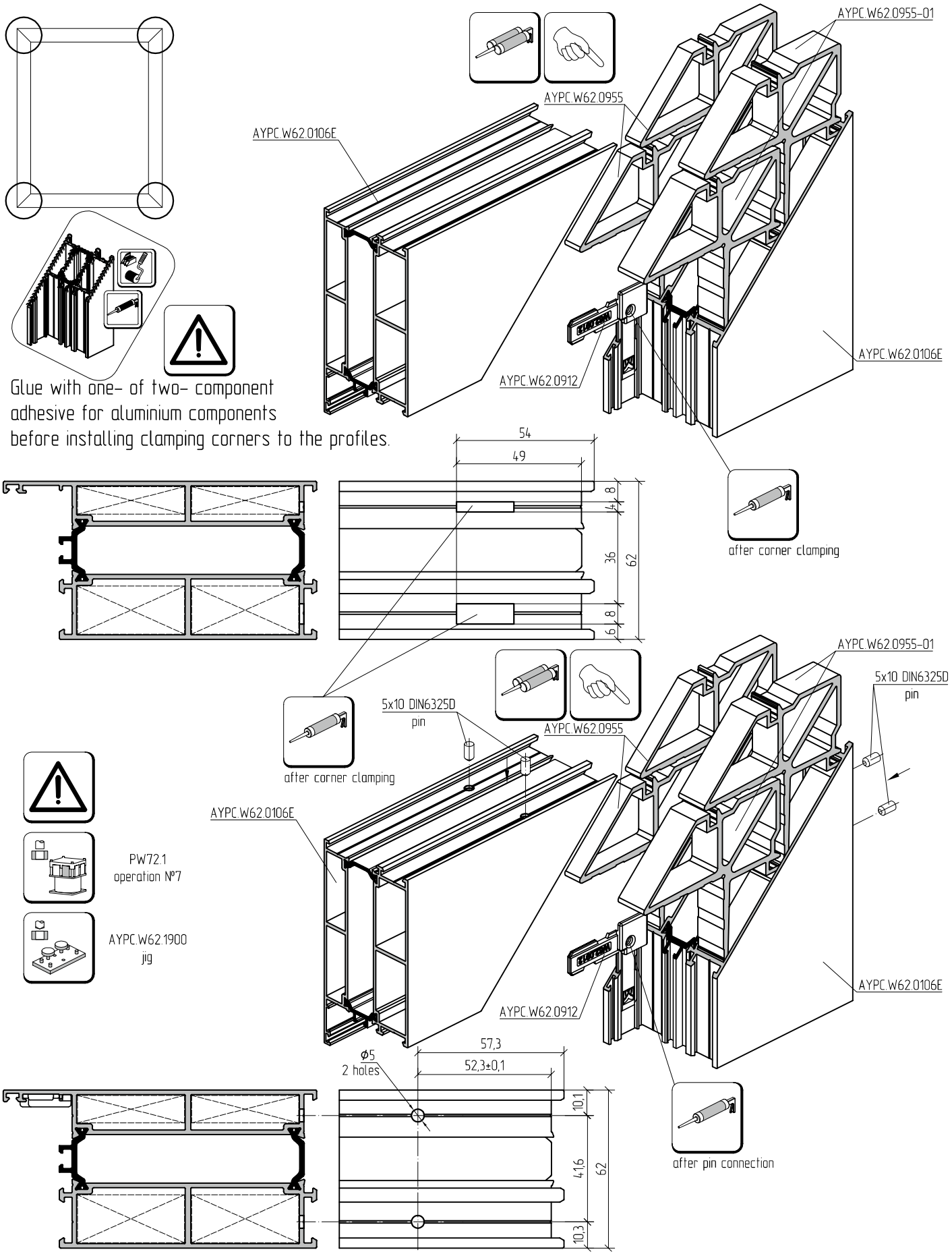

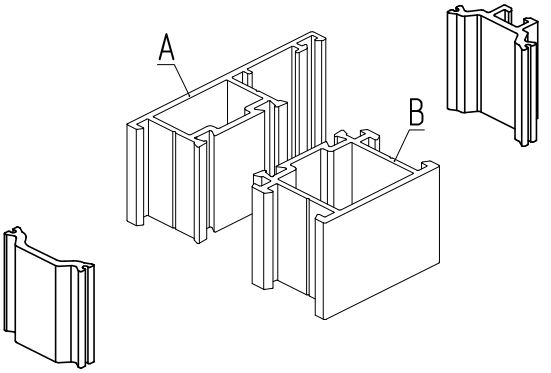

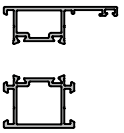	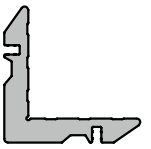	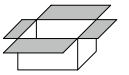	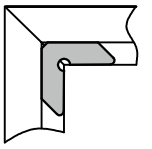	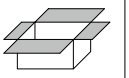
AYPC.W62.0101E				
Profile chamber A	AYPC.W62.0952-01	200 pcs	AYPC.W62.0912	120 pcs
Profile chamber B	AYPC.W62.0952-02	100 pcs	-	-
AYPC.W62.0102E				
Profile chamber A	AYPC.W62.0953-01	200 pcs	AYPC.W62.0912	120 pcs
Profile chamber B	AYPC.W62.0953-02 / AYPC.W50.0931	100 pcs / 60 pcs	-	-
AYPC.W62.0103E				
Profile chamber A	AYPC.W62.0954-02	140 pcs	AYPC.W62.0912	120 pcs
Profile chamber B	AYPC.W62.0954-03	70 pcs	-	-
AYPC.W62.0106E				
Profile chamber A	AYPC.W62.0955	120 pcs	AYPC.W62.0912	120 pcs
Profile chamber B	AYPC.W62.0955-01	70 pcs	-	-
AYPC.W62.0107E				
Profile chamber A	AYPC.W62.0953-01	200 pcs	AYPC.W62.0912	120 pcs
Profile chamber B	AYPC.W62.0953-02	100 pcs	-	-
AYPC.W62.0121E				
Profile chamber A	AYPC.W62.0952-01	200 pcs	-	-
Profile chamber B	AYPC.W62.0952-02	100 pcs	-	-
AYPC.W62.0122E				
Profile chamber A	AYPC.W62.0953-01	200 pcs	-	-
Profile chamber B	AYPC.W62.0953-02	100 pcs	-	-
AYPC.W62.0123E				
Profile chamber A	AYPC.W62.0954-02	140 pcs	-	-
Profile chamber B	AYPC.W62.0954-03	70 pcs	-	-
For PVC groove windows (AYPC.W62.0211E, AYPC.W62.0212E)				
AYPC.W62.0102E for PVC groove windows				
Profile chamber A	AYPC.W62.0953-01	200 pcs	AYPC.W62.0912	120 pcs
Profile chamber B	AYPC.W50.0931	60 pcs	-	-

AYPC.W62.0201E profile corner connection by clamping and using 5x10 pins

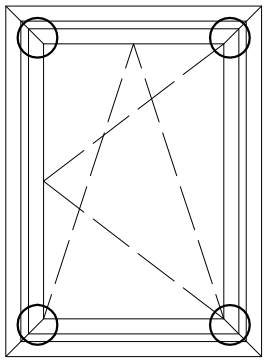

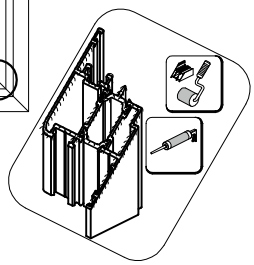

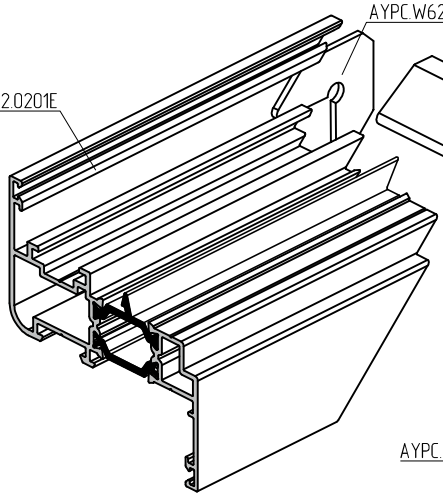

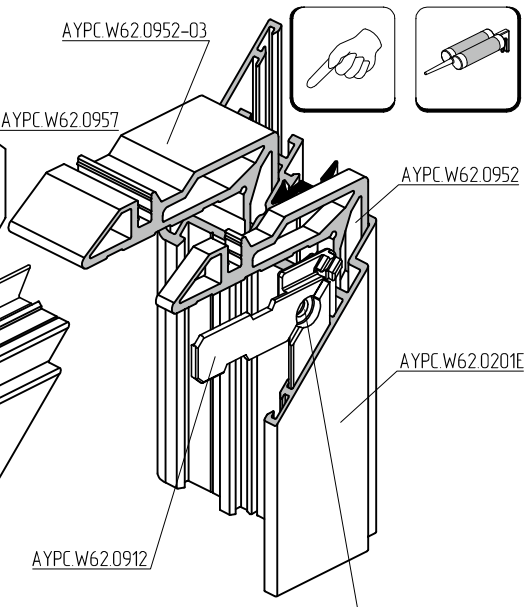

Glue with one- of two- component adhesive for aluminium components before installing clamping corners to the profiles.

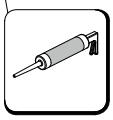

after corner clamping

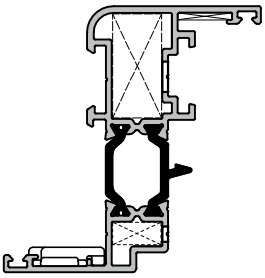

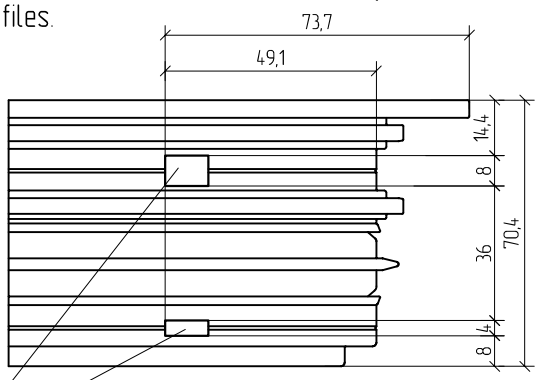

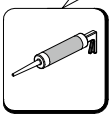

after corner clamping

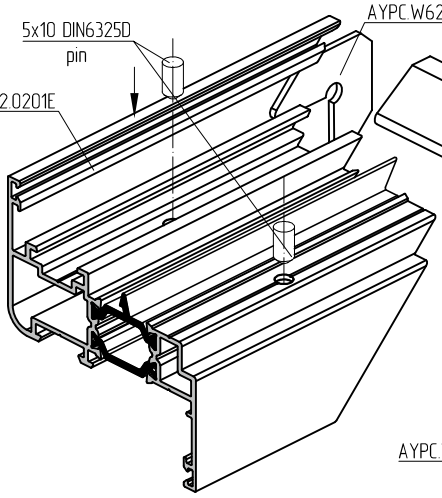

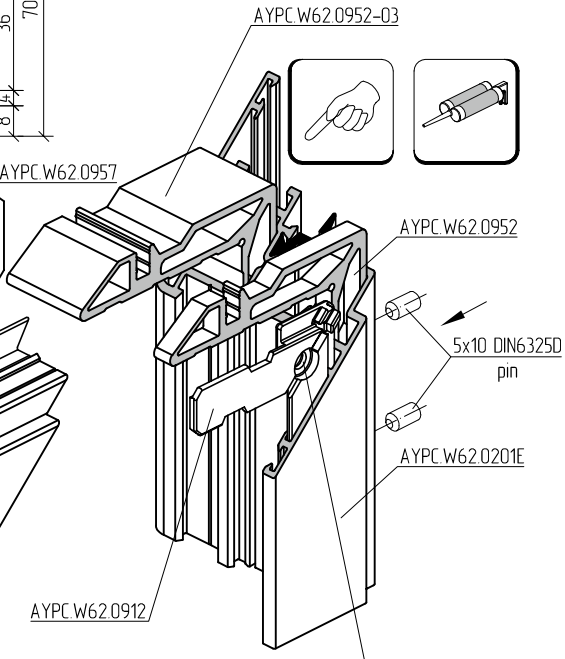

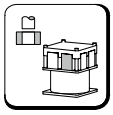

PW72.2
operation №1

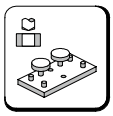

AYPC.W62.1920
jig

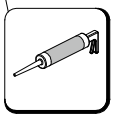

after pin connection

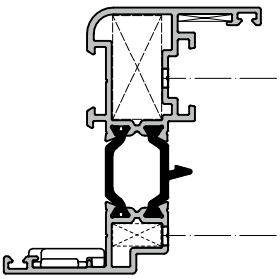

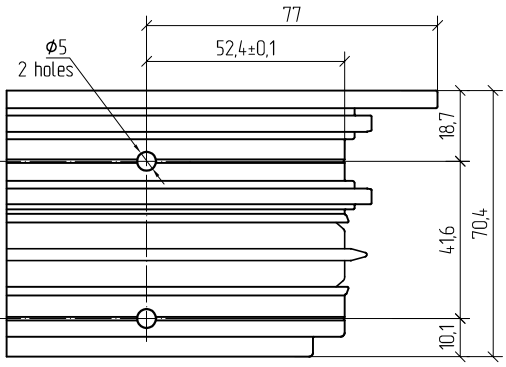

AYPC.W62.0211E profile corner connection for PVC groove

by clamping and using 5x10 pins

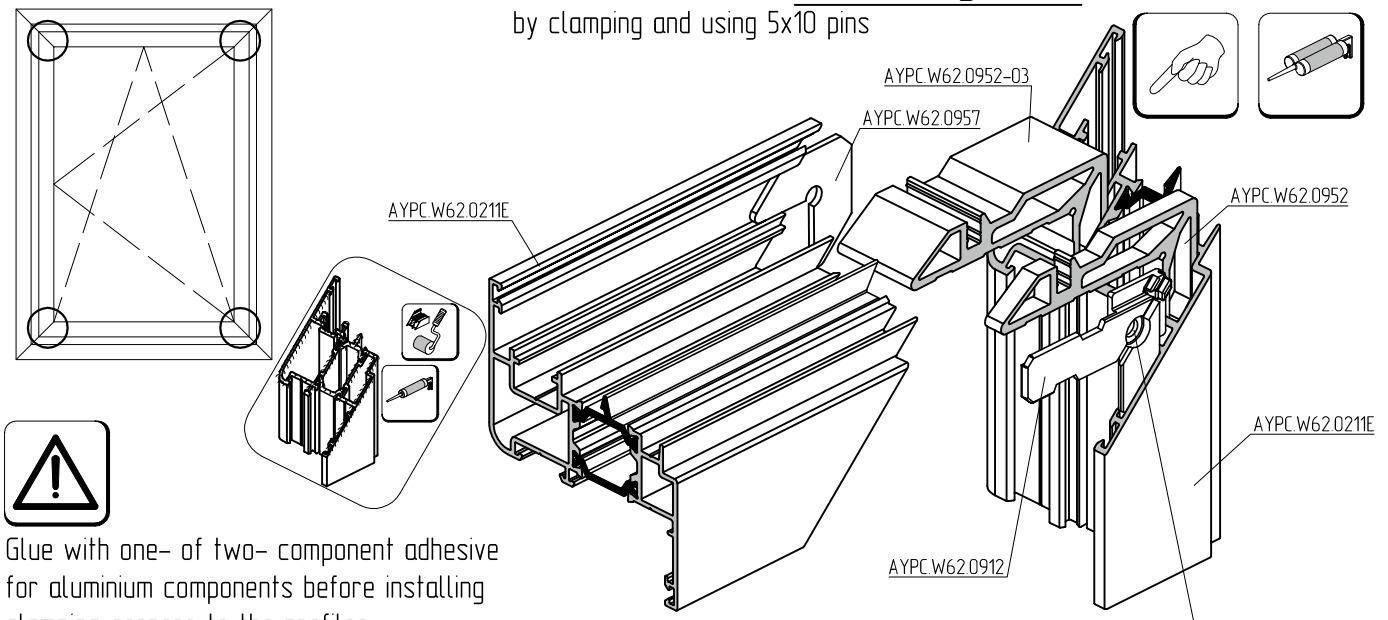

Glue with one- of two- component adhesive for aluminium components before installing clamping corners to the profiles.

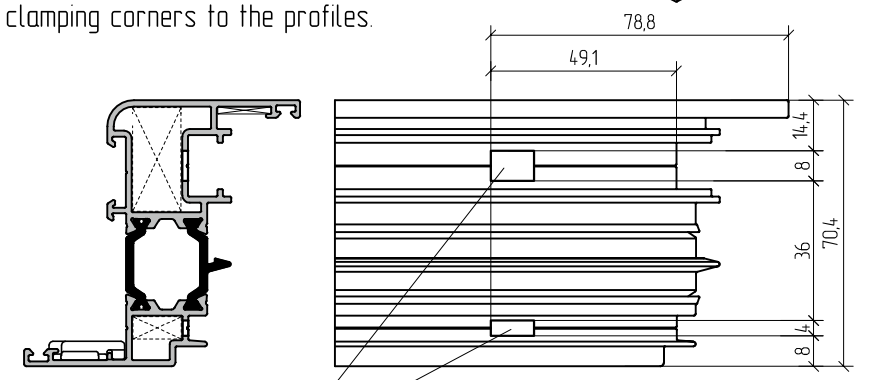

after corner clamping

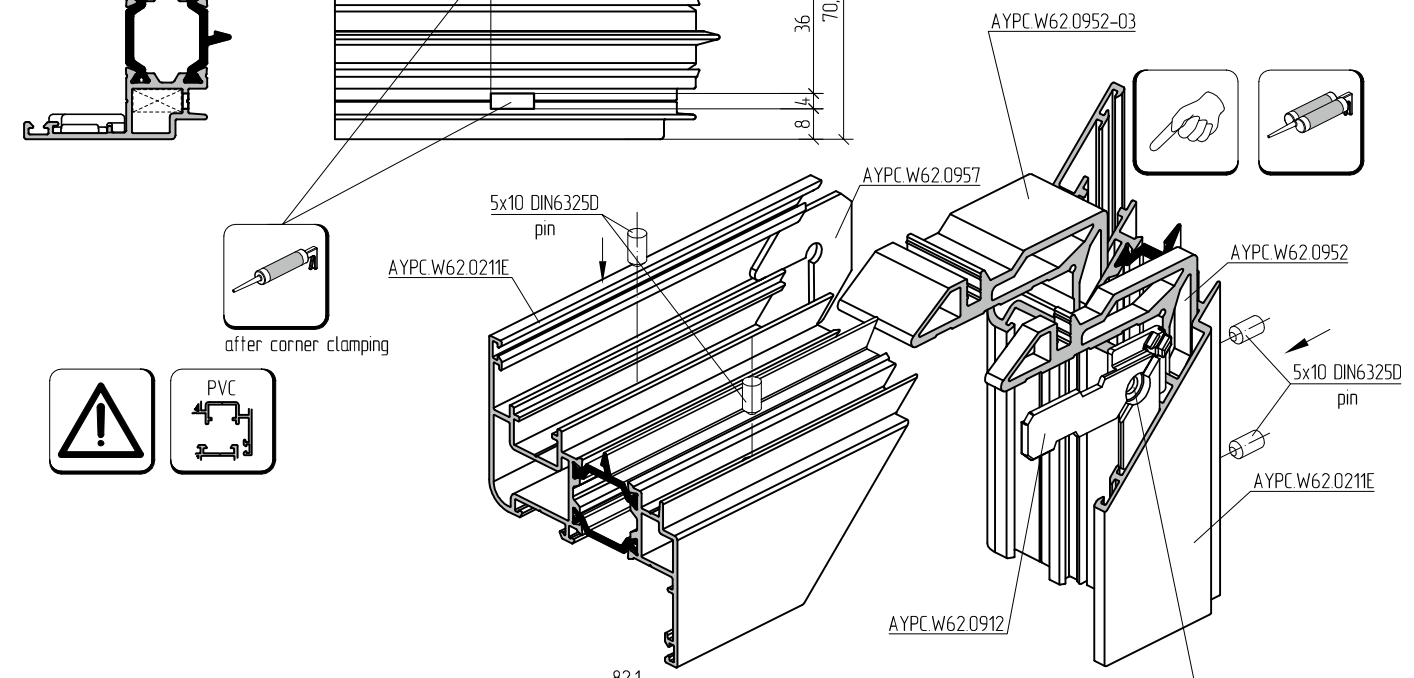

after corner clamping

PVC

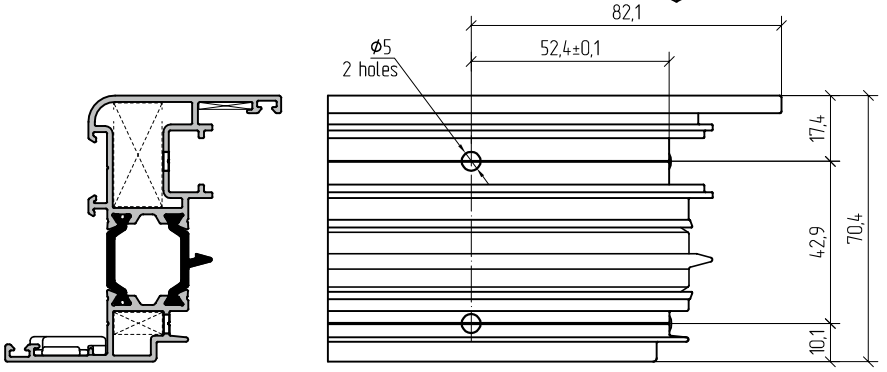

after pin connection

AYPC.W62.0221E profile corner connection by clamping and using 5x10 pins

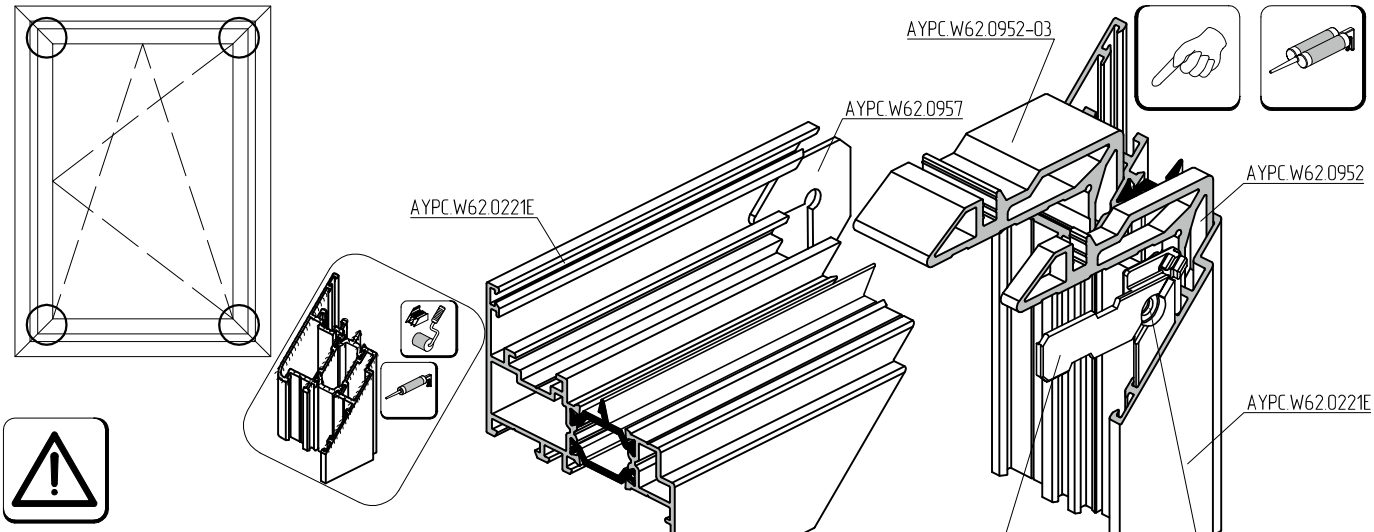

Glue with one- of two- component adhesive for aluminium components before installing clamping corners to the profiles.

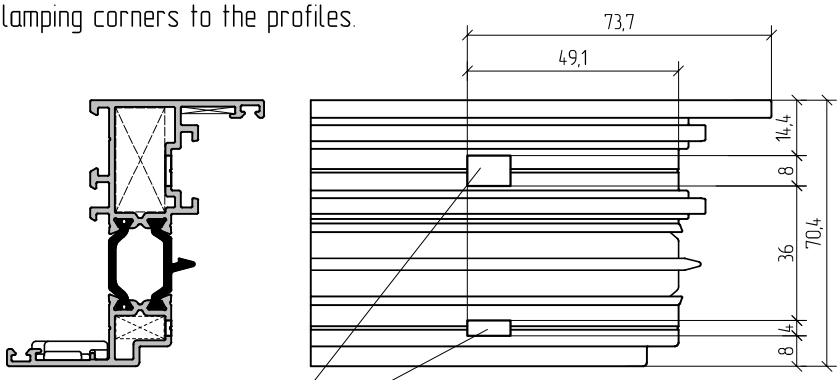

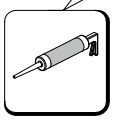

after corner clamping

PW72.2
operation №1

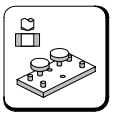

AYPC.W62.1920
jig

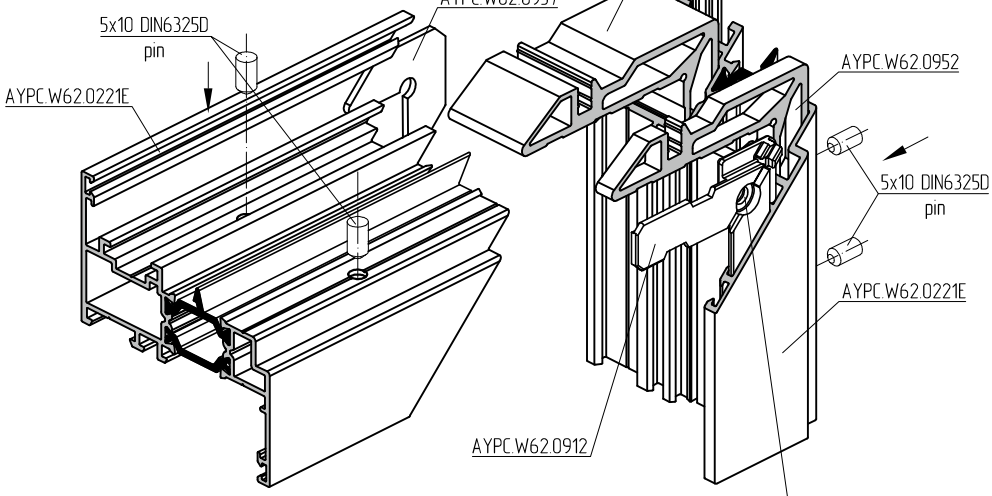

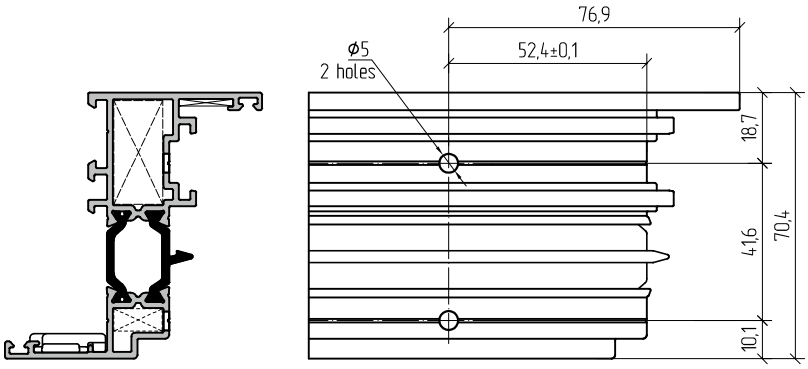

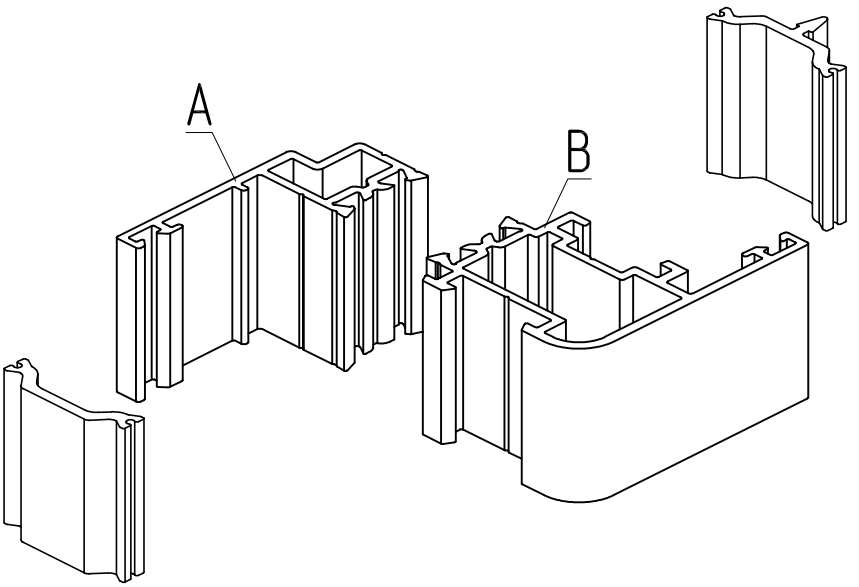

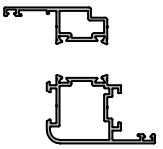	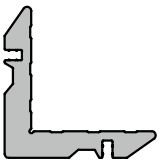	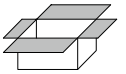	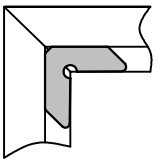	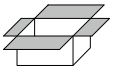
AYPC.W62.0201E				
Profile chamber A	AYPC.W62.0952	400 pcs	AYPC.W62.0912	120 pcs
Profile chamber B	AYPC.W62.0952-03	100 pcs	AYPC.W62.0957	200 pcs
AYPC.W62.0202E				
Profile chamber A	AYPC.W62.0953	200 pcs	AYPC.W62.0912	120 pcs
Profile chamber B	AYPC.W62.0953-03	40 pcs	AYPC.W62.0957	200 pcs
AYPC.W62.0203E				
Profile chamber A	AYPC.W62.0954-04	200 pcs	AYPC.W62.0912	120 pcs
Profile chamber B	AYPC.W62.0954-05	50 pcs	AYPC.W62.0957	200 pcs
AYPC.W62.0211E (for PVC-groove hardware)				
Profile chamber A	AYPC.W62.0952	400 pcs	AYPC.W62.0912	120 pcs
Profile chamber B	AYPC.W62.0952-03	100 pcs	AYPC.W62.0957	200 pcs
AYPC.W62.0212E (for PVC-groove hardware)				
Profile chamber A	AYPC.W62.0953	200 pcs	AYPC.W62.0912	120 pcs
Profile chamber B	AYPC.W62.0953-03	40 pcs	AYPC.W62.0957	200 pcs
AYPC.W62.0221E				
Profile chamber A	AYPC.W62.0952	400 pcs	AYPC.W62.0912	120 pcs
Profile chamber B	AYPC.W62.0952-03	100 pcs	AYPC.W62.0957	200 pcs
AYPC.W62.0222E				
Profile chamber A	AYPC.W62.0953	200 pcs	AYPC.W62.0912	120 pcs
Profile chamber B	AYPC.W62.0953-03	40 pcs	AYPC.W62.0957	200 pcs
AYPC.W62.0223E				
Profile chamber A	AYPC.W62.0954-04	200 pcs	AYPC.W62.0912	120 pcs
Profile chamber B	AYPC.W62.0954-05	50 pcs	AYPC.W62.0957	200 pcs

AYPC.W62.0301E profile corner connection by clamping and using 5x10 pins

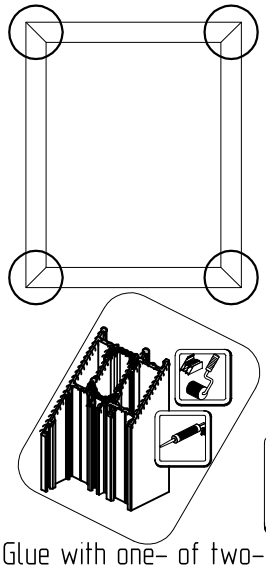

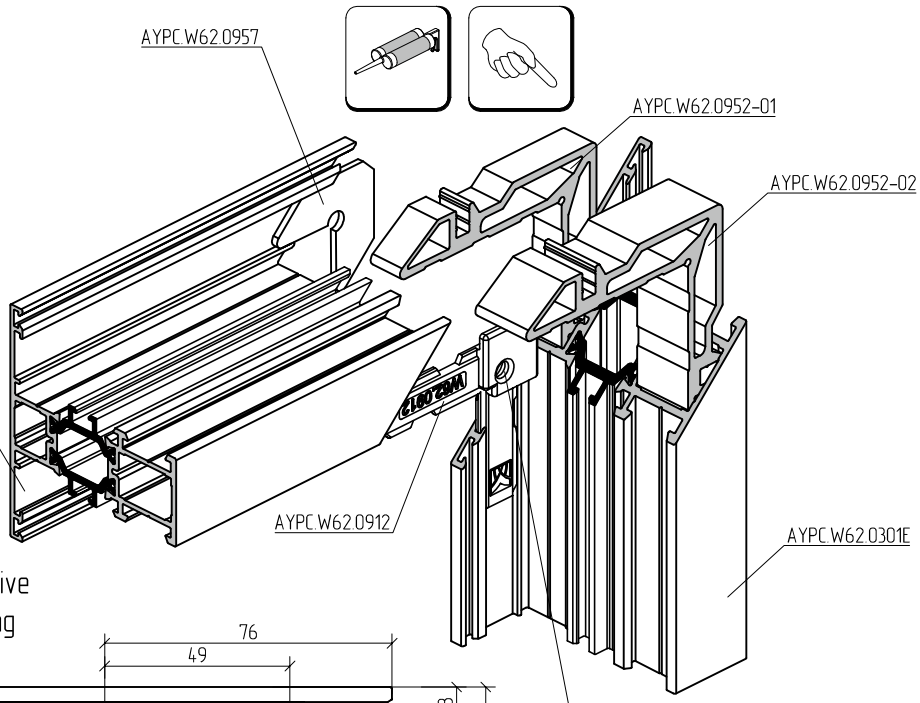

Glue with one- of two- component adhesive for aluminium components before installing clamping corners to the profiles.

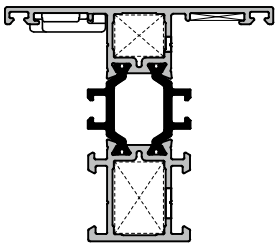

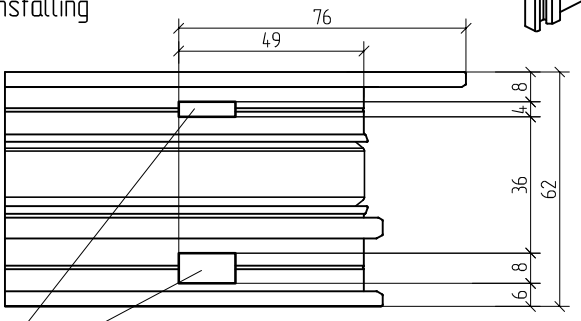

after corner clamping

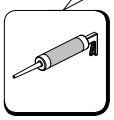

after corner clamping

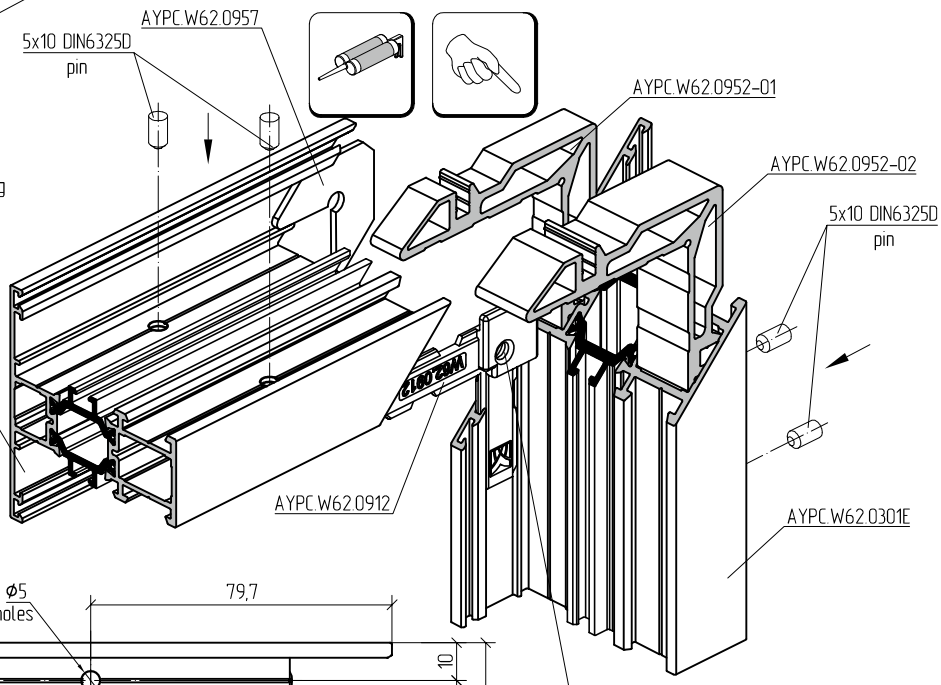

PW72.1
operation №7

AYPC.W62.1900
jig

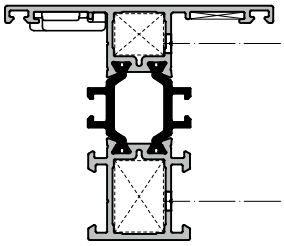

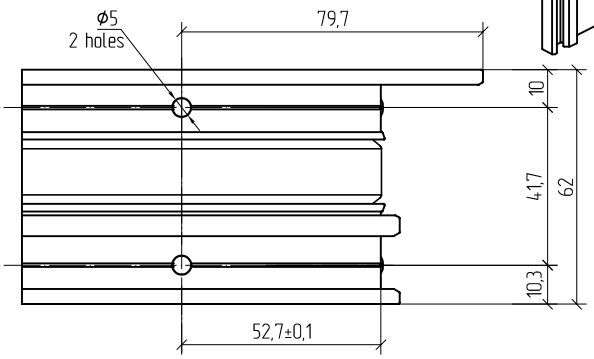

after pin connection

AYPC.W62.0302E profile corner connection by clamping and using 5x10 pins for windows with PVC groove

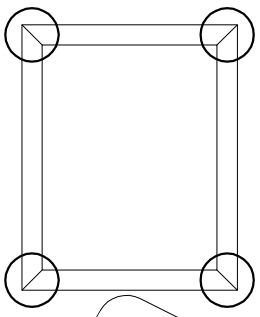

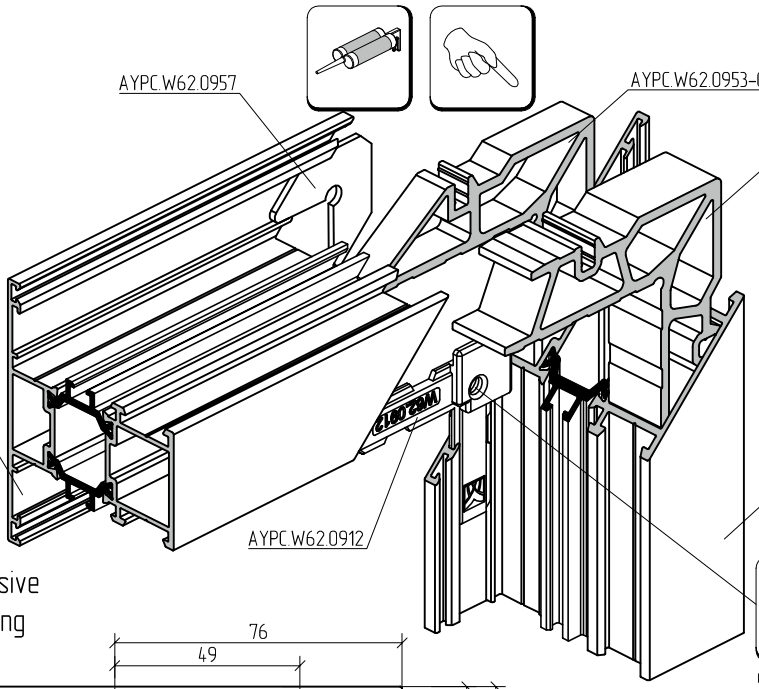

Glue with one- of two- component adhesive for aluminium components before installing clamping corners to the profiles.

after corner clamping

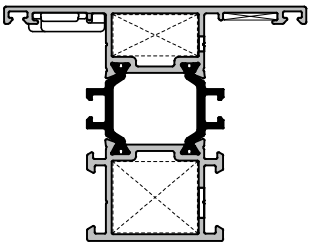

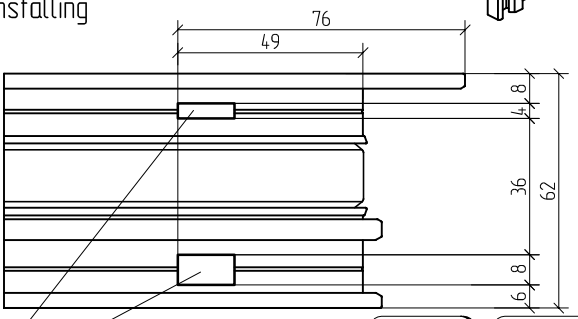

PVC

or PVC groove windows use only AYPC.W62.0102E, AYPC.W62.0302E profiles

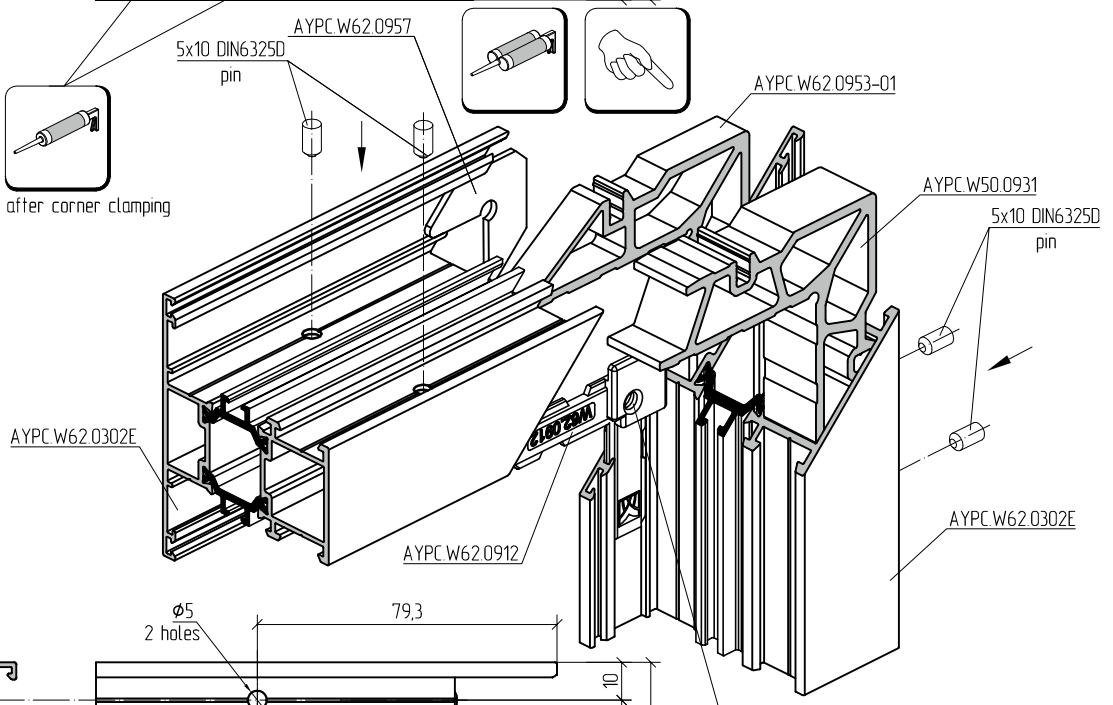

after corner clamping

PW72.1
operation N°7

AYPC.W62.1900
jig

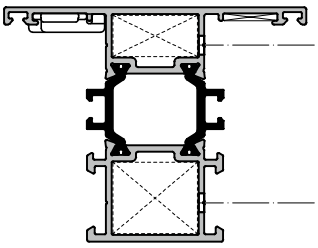

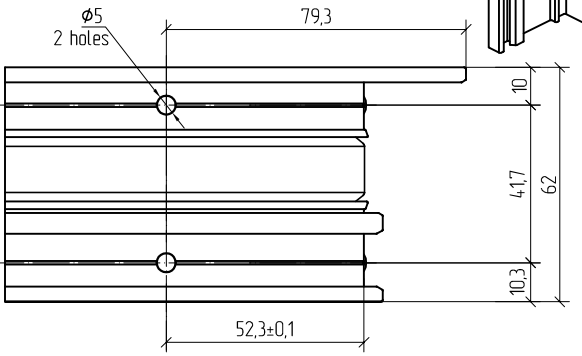

after pin connection

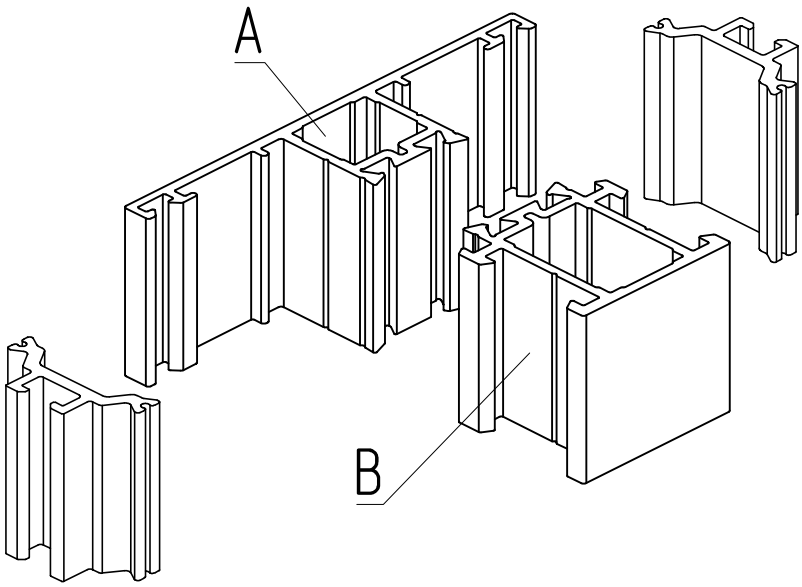

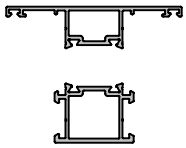	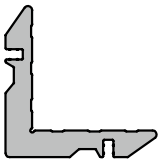		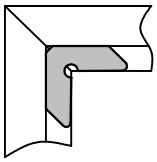	
AYPC.W62.0301E				
Profile chamber A	AYPC.W62.0952-01	200 pcs	AYPC.W62.0957	200 pcs
Profile chamber B	AYPC.W62.0952-02	100 pcs	AYPC.W62.0912	120 pcs
AYPC.W62.0302E				
Profile chamber A	AYPC.W62.0953-01	200 pcs	AYPC.W62.0957	200 pcs
Profile chamber B	AYPC.W62.0953-02 / AYPC.W50.0931	100 pcs / 60 pcs	AYPC.W62.0912	120 pcs
AYPC.W62.0303E				
Profile chamber A	AYPC.W62.0954-02	140 pcs	AYPC.W62.0957	200 pcs
Profile chamber B	AYPC.W62.0954-03	70 pcs	AYPC.W62.0912	120 pcs
For PVC groove windows (AYPC.W62.0211E, AYPC.W62.0212E)				
AYPC.W62.0302E for PVC groove windows				
Profile chamber A	AYPC.W62.0953-01	200 pcs	AYPC.W62.0957	200 pcs
Profile chamber B	AYPC.W50.0931	60 pcs	AYPC.W62.0912	120 pcs

AYPC.W62.0104E profile corner connection by clamping and using 5x10 pins. Option 1.

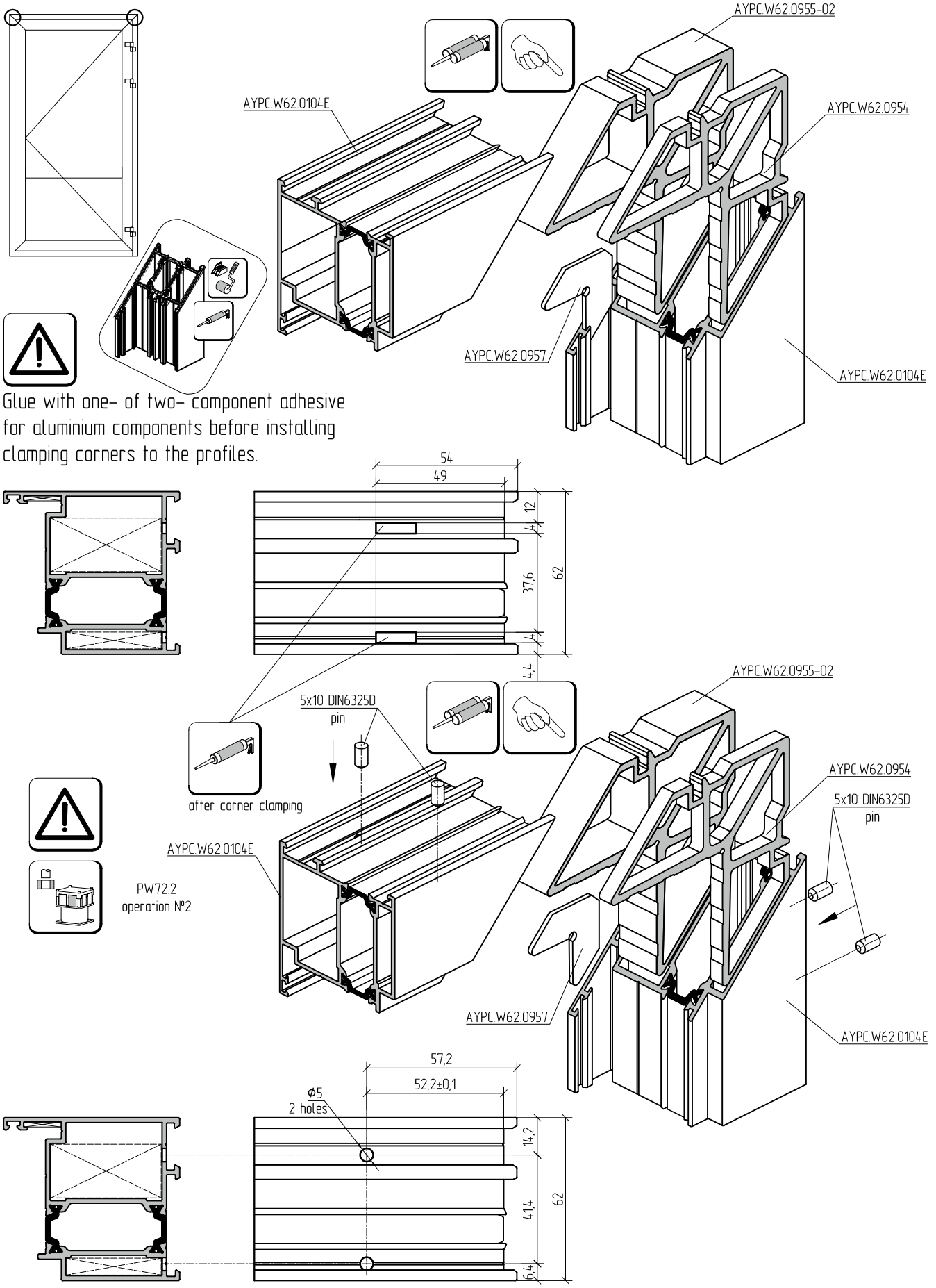

AYPC.W62.0104E profile corner connection by clamping and using 5x10 pins. Option 2.

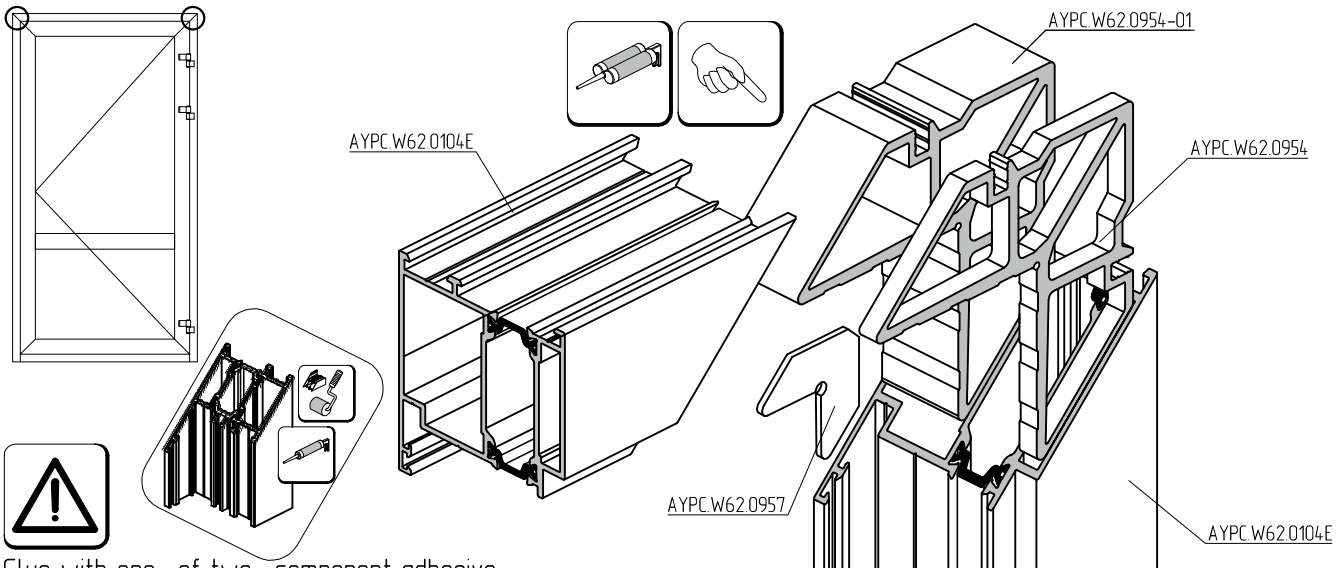

Glue with one- of two- component adhesive for aluminium components before installing clamping corners to the profiles.

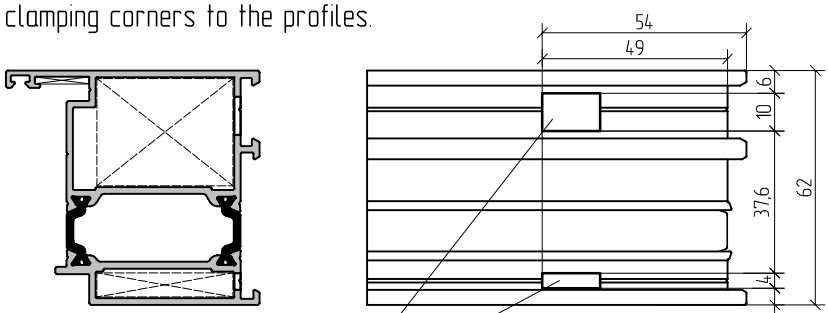

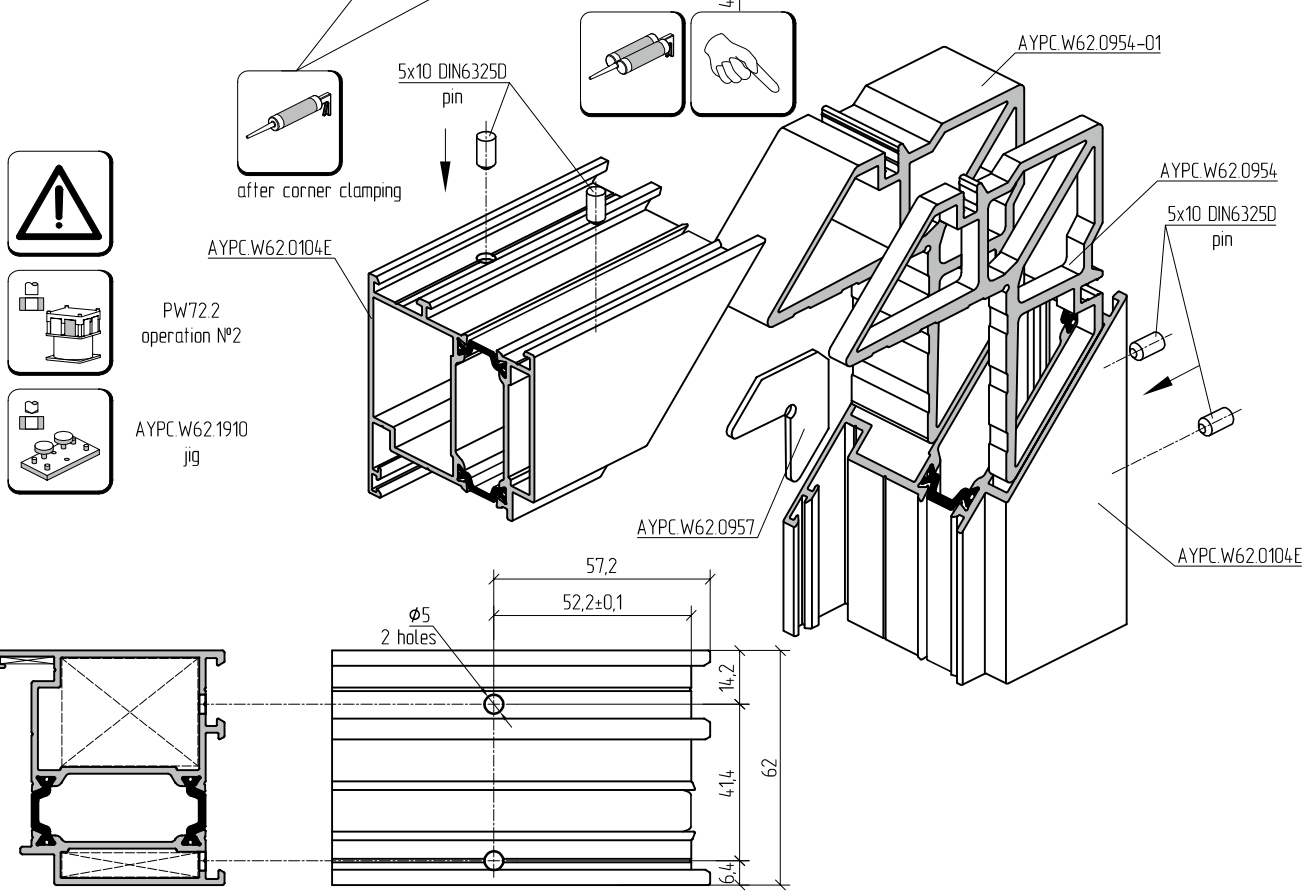

AYPC.W62.0105E profile corner connection by clamping and using 5x10 pins. Option 1.

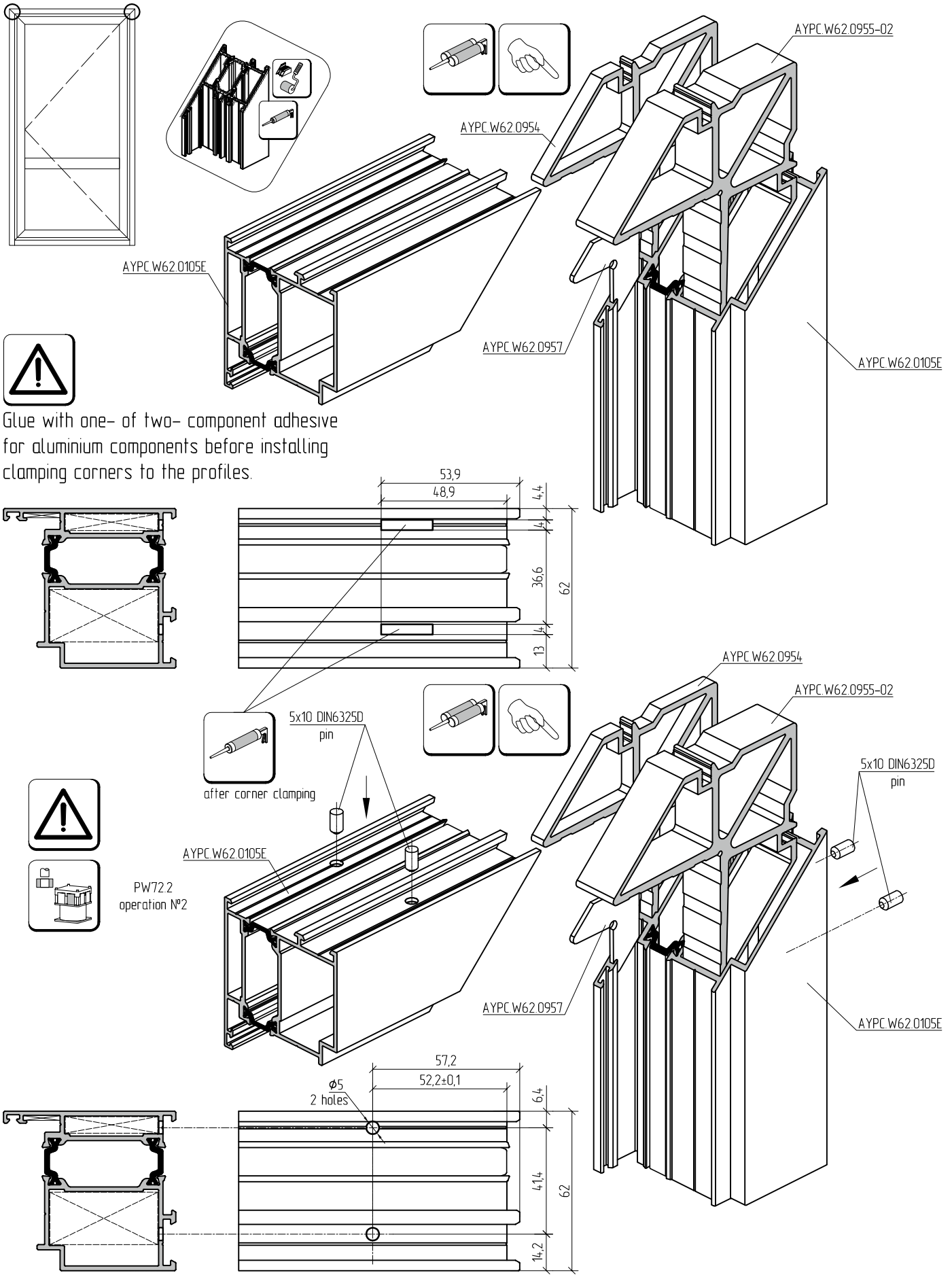

AYPC.W62.0105E profile corner connection by clamping and using 5x10 pins. Option 2.

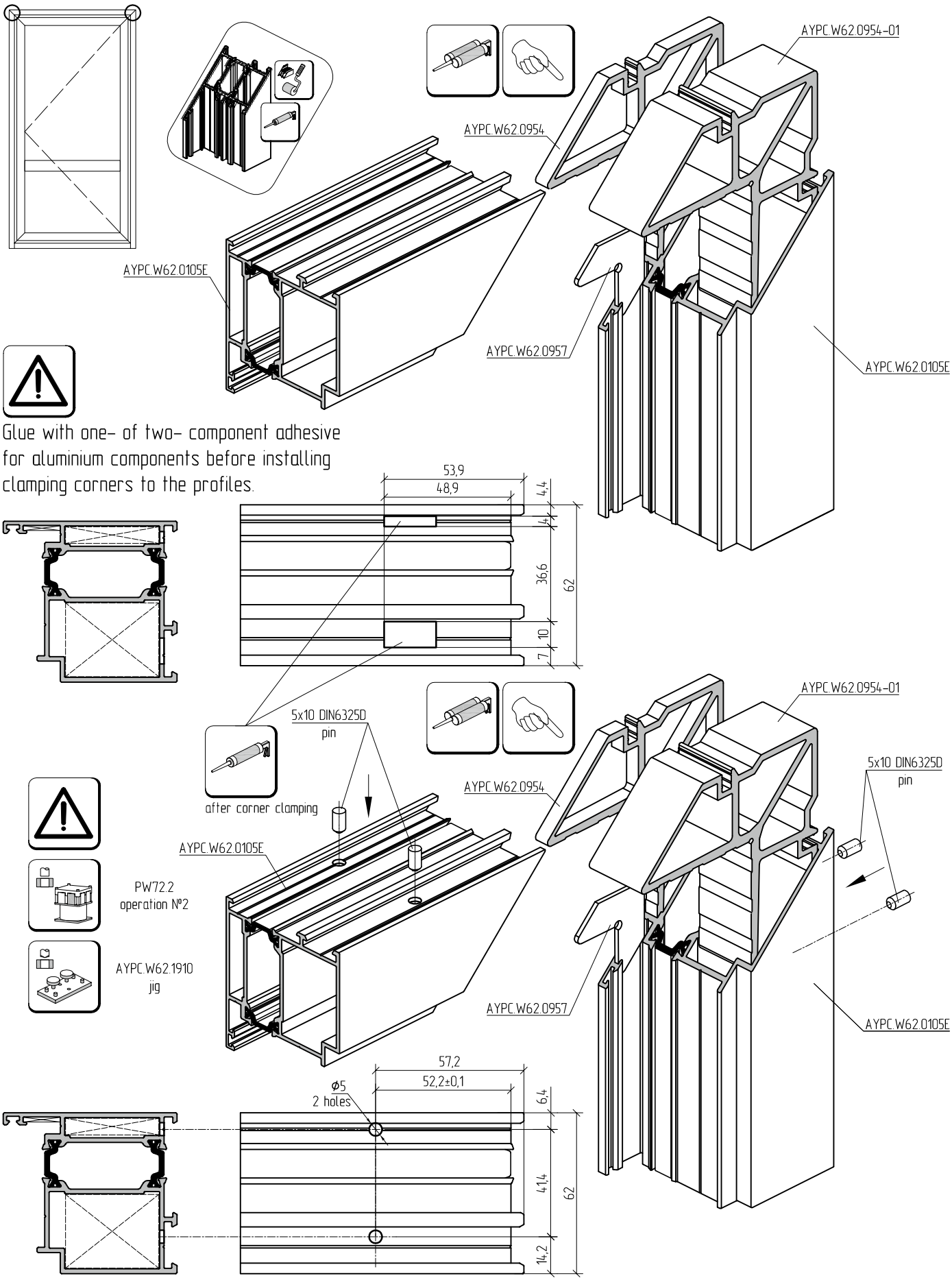

AYPC.W62.0204E profile corner connection by clamping and using 5x10 pins.

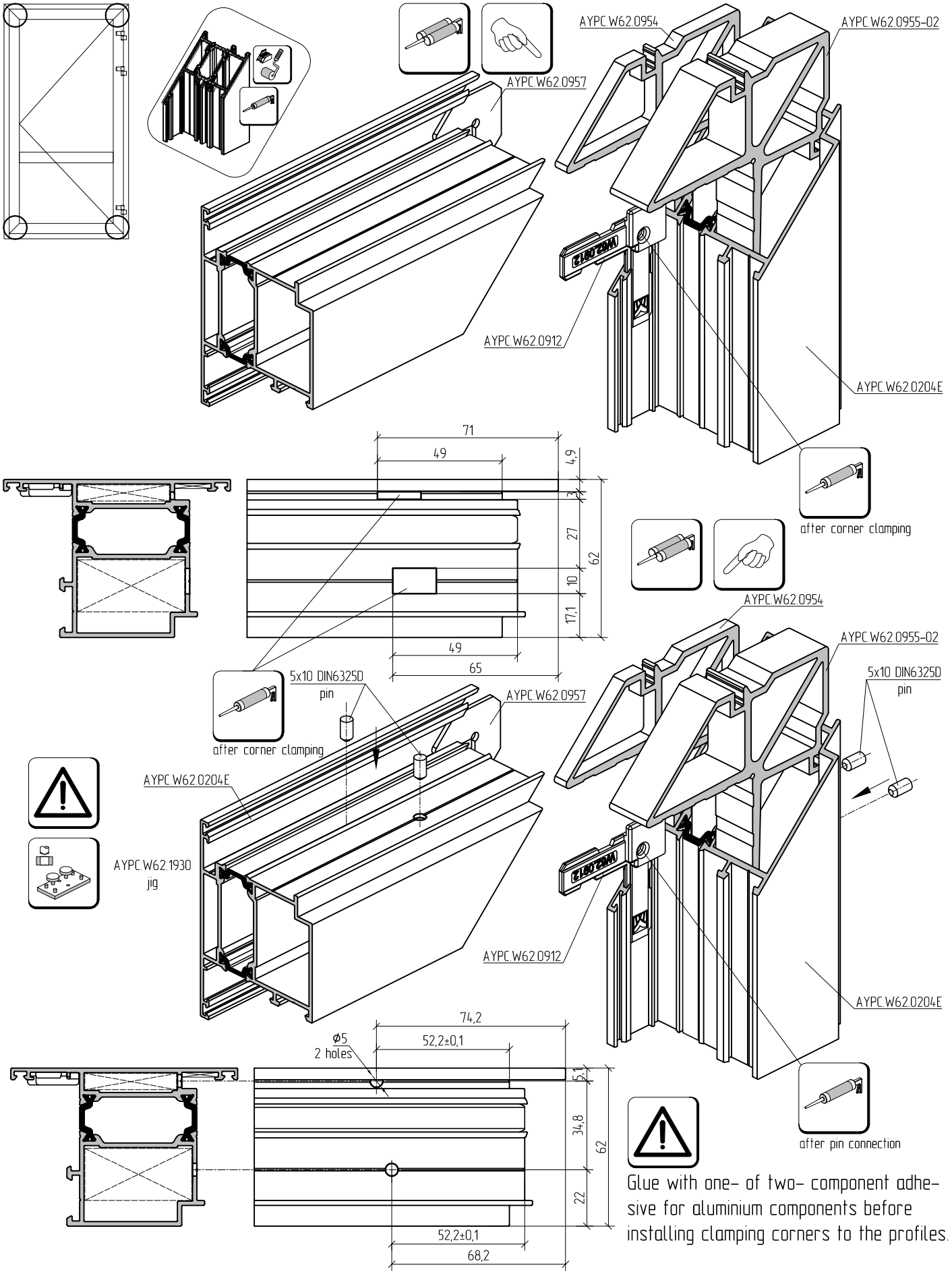

Glue with one- of two- component adhesive for aluminium components before installing clamping corners to the profiles.

AYPC.W62.0205E profile corner connection by clamping and using 5x10 pins.

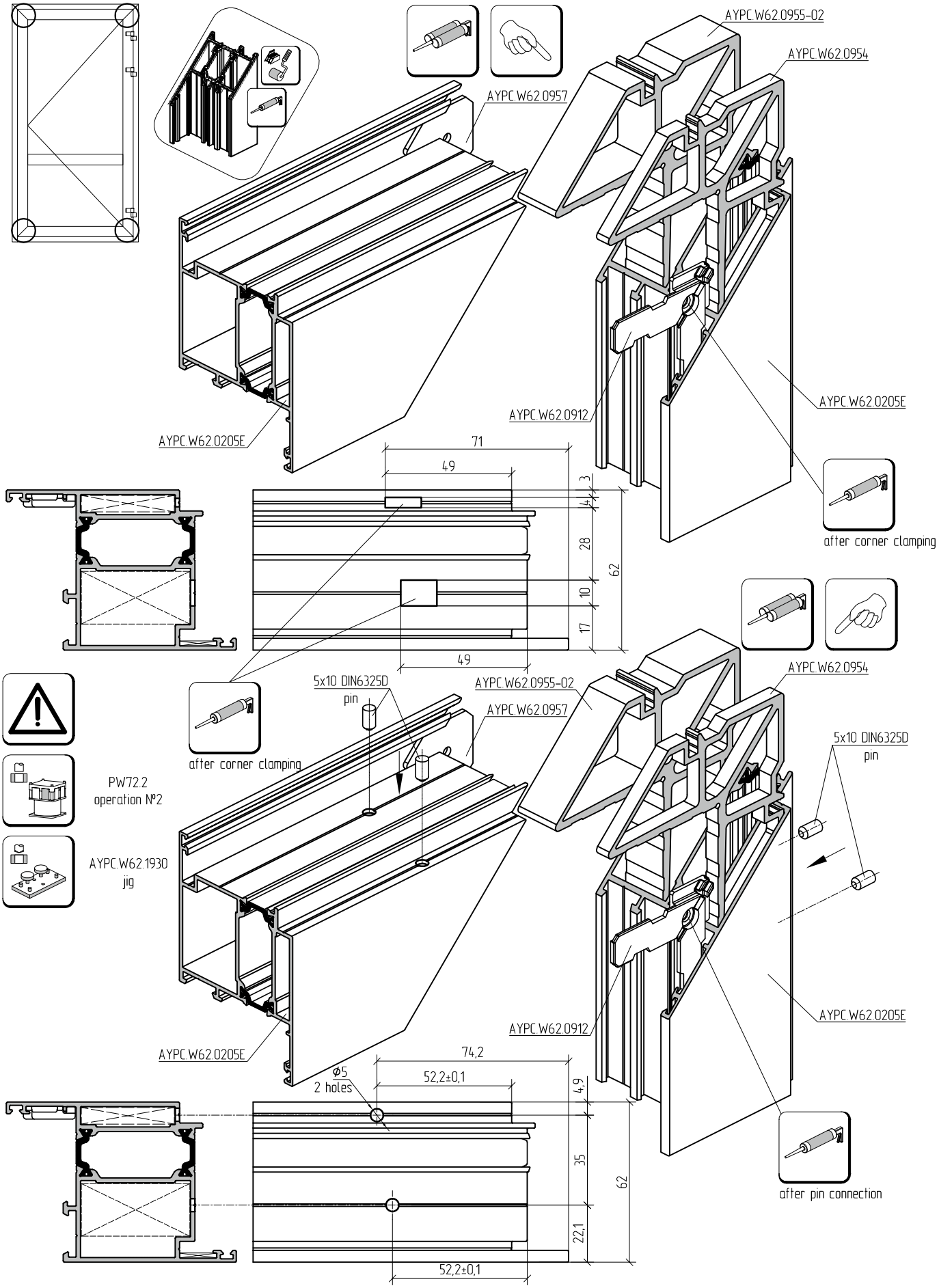

AYPC.W62.0204E and AYPC.W62.0205E profiles corner connection by clamping.

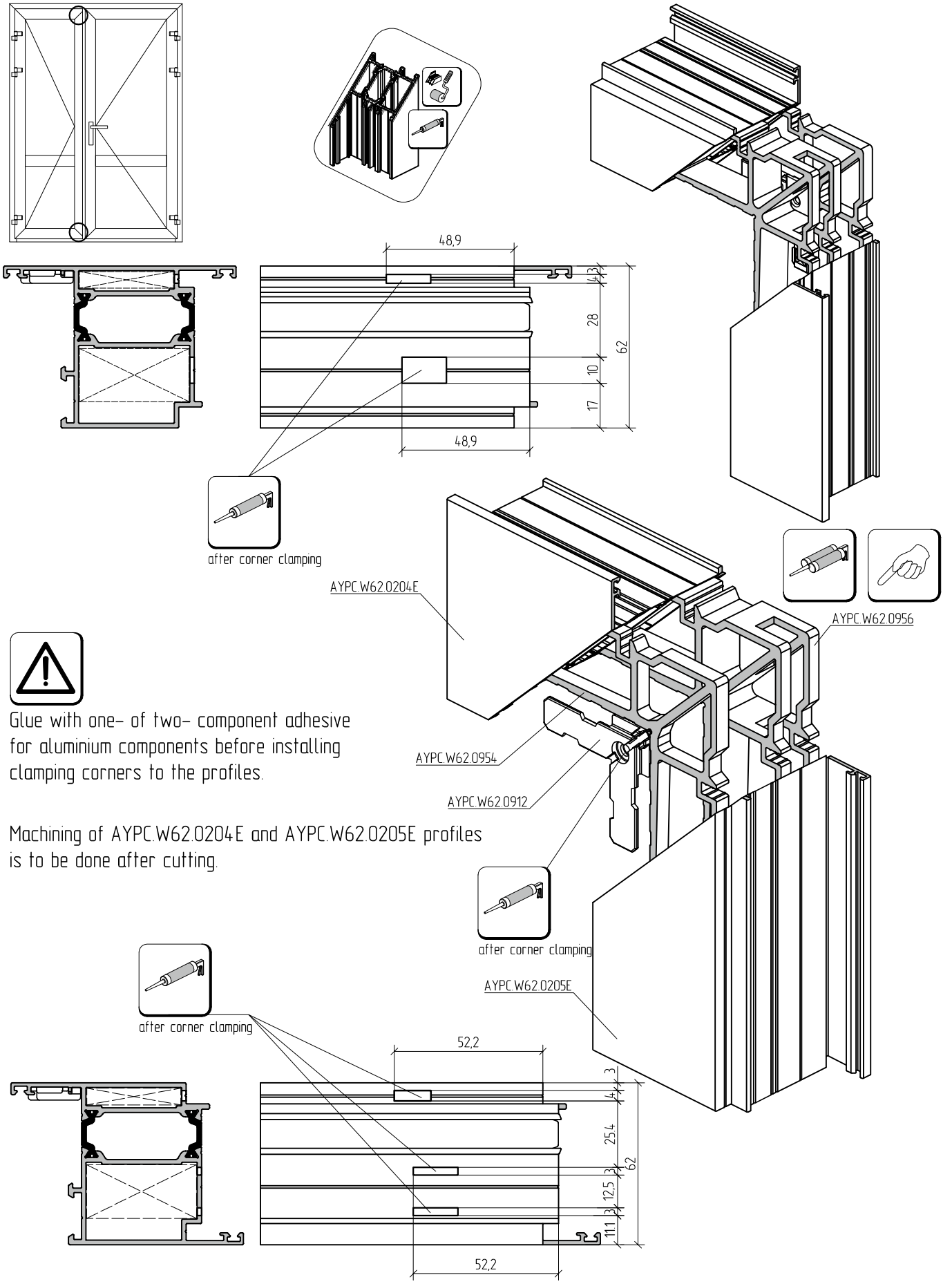

Glue with one- of two- component adhesive for aluminium components before installing clamping corners to the profiles.

Machining of AYPC.W62.0204E and AYPC.W62.0205E profiles is to be done after cutting.

AYPC.W62.0204E and AYPC.W62.0205E profiles corner connection using 5x10 pins.

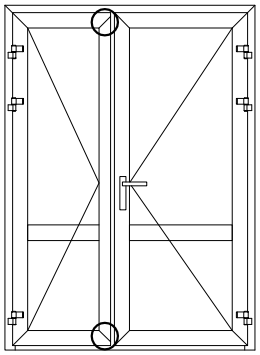

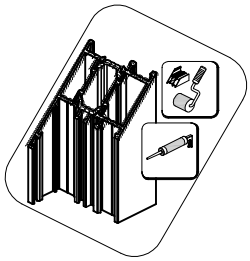

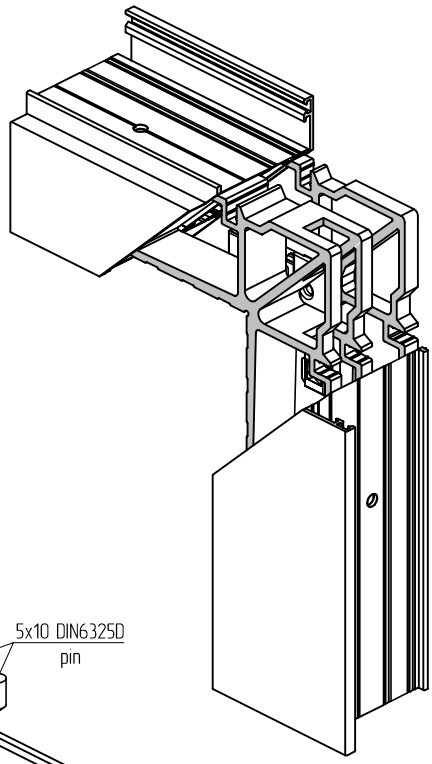

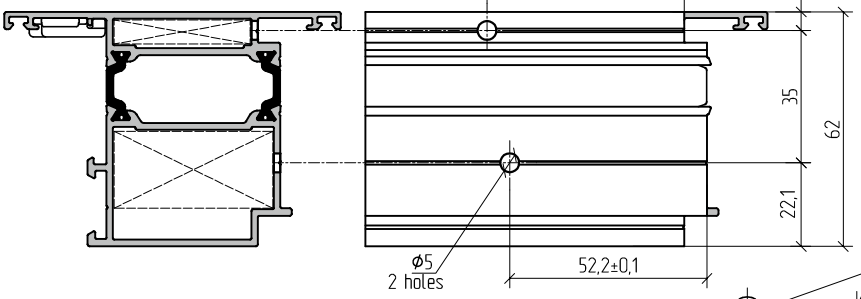

PW72.2
operation Nº2

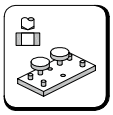

jig AYPC.W62.1930
(for AYPC.W62.0204 only)

Glue with one- of two- component adhesive for aluminium components before installing clamping corners to the profiles.

Machining of AYPC.W62.0204E and AYPC.W62.0205E profiles is to be done after cutting.

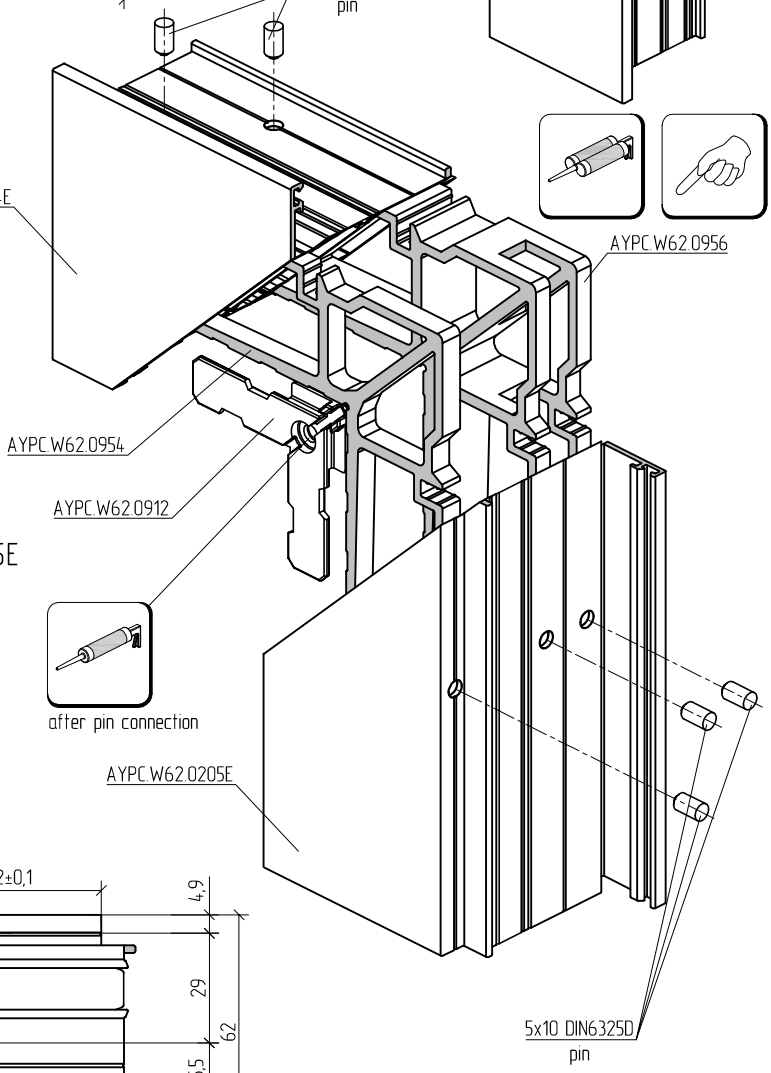

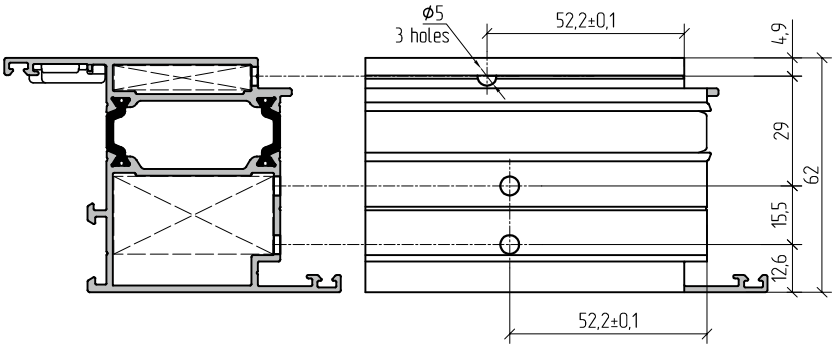

AYPC.W62.0204E and AYPC.W62.0205E profiles corner connection by clamping and using 5x10 pins.

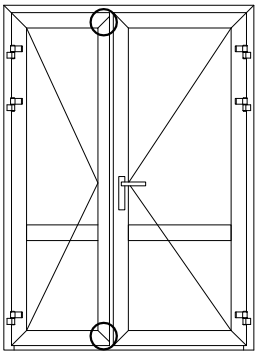

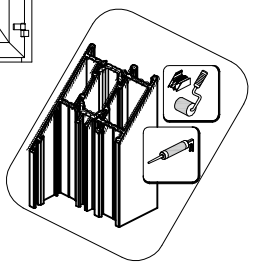

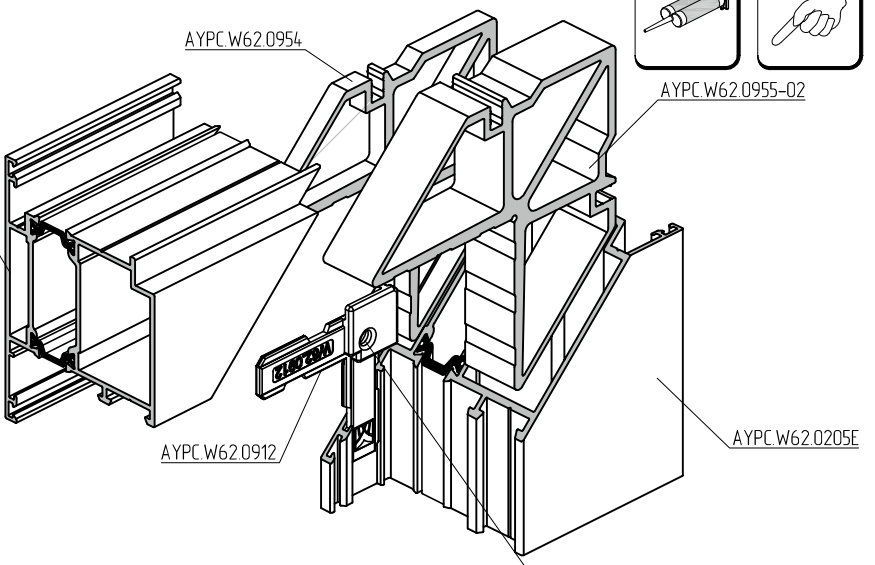

Glue with one- of two- component adhesive for aluminium components before installing clamping corners to the profiles.

after corner clamping

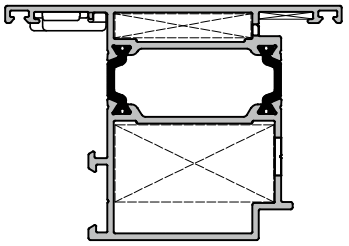

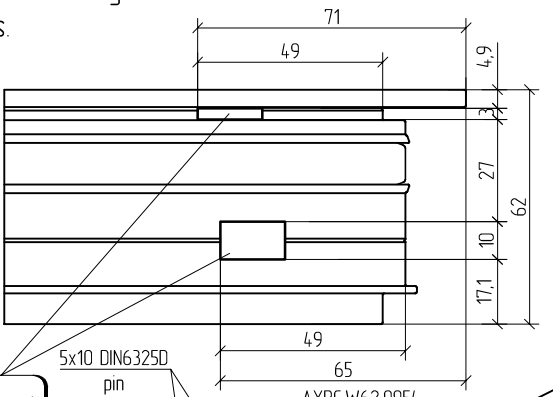

5x10 DIN6325D pin

after corner clamping

PW72.2 operation №2 (for AYPC.W62.0205 only)

AYPC.W62.1930 jig

Machining of AYPC.W62.0204E and AYPC.W62.0205E profiles is to be done after cutting.

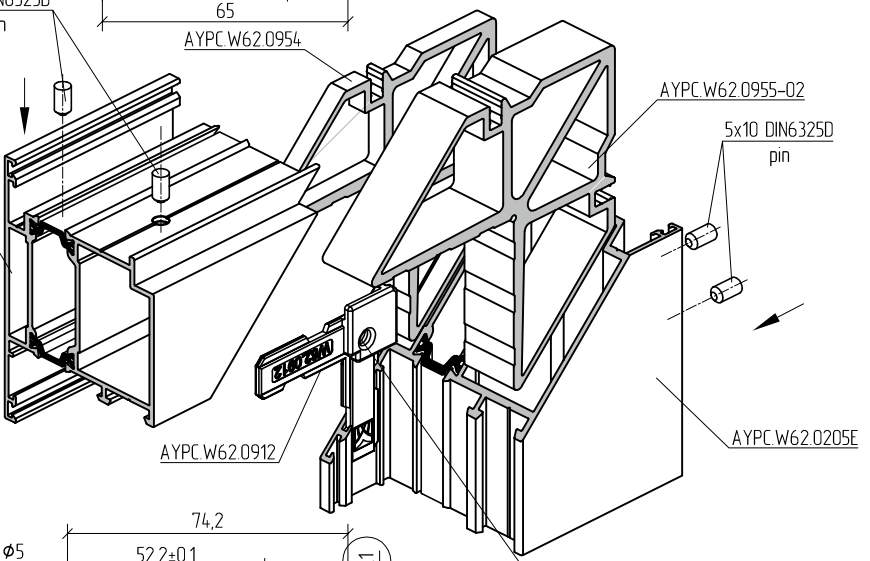

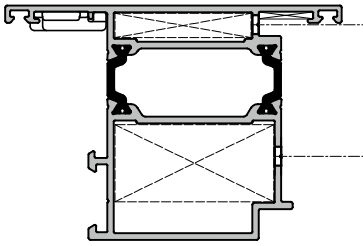

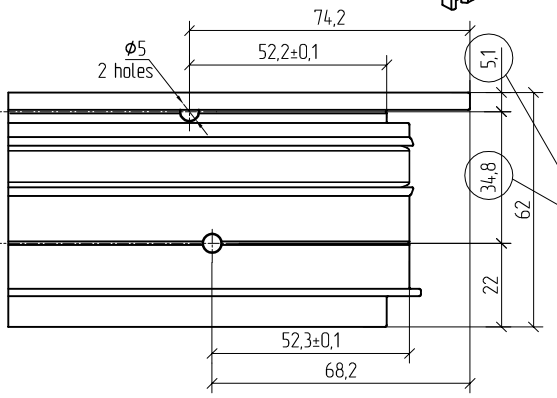

after pin connection

AYPC.W62.0205 profile machining is made at the same way except of 34,8 mm and 5,1 mm dimensions. For AYPC.W62.0205 profile these dimensions will be 35 mm and 4,9 mm accordingly.

AYPC.W62.0805E profile corner connection by clamping and using 5x10 pins

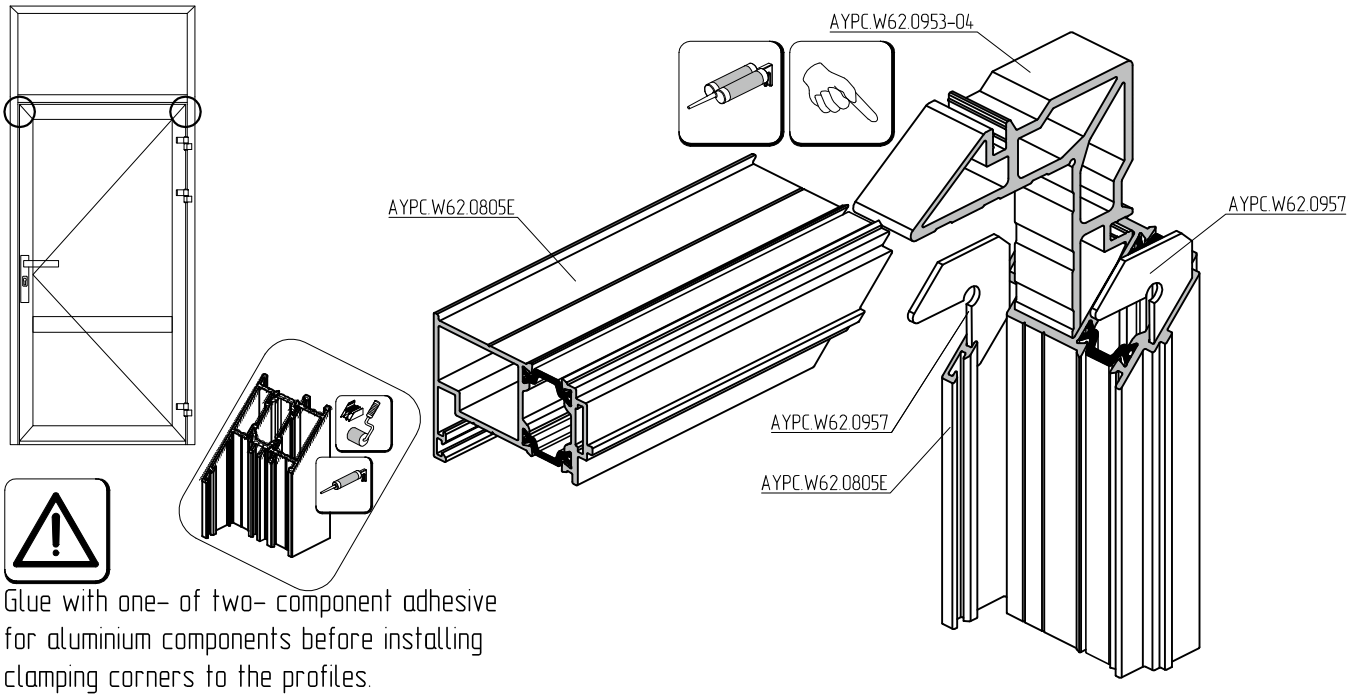

Glue with one- of two- component adhesive for aluminium components before installing clamping corners to the profiles.

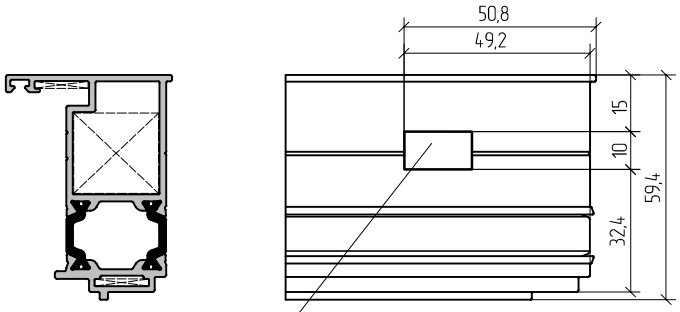

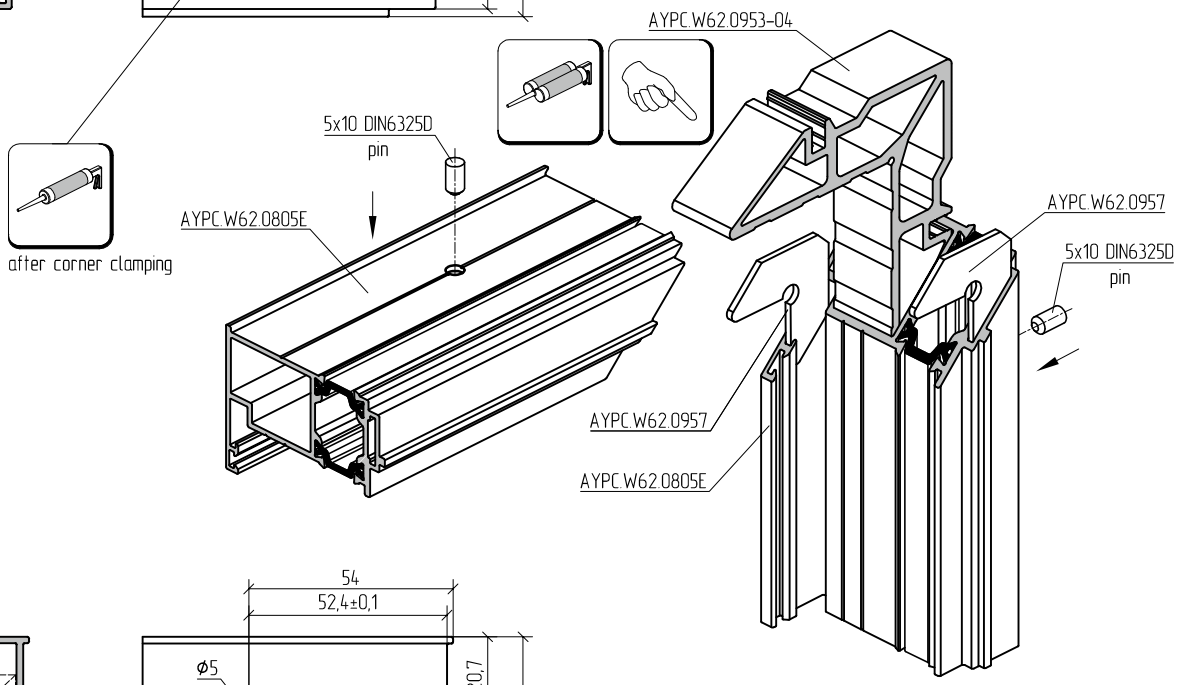

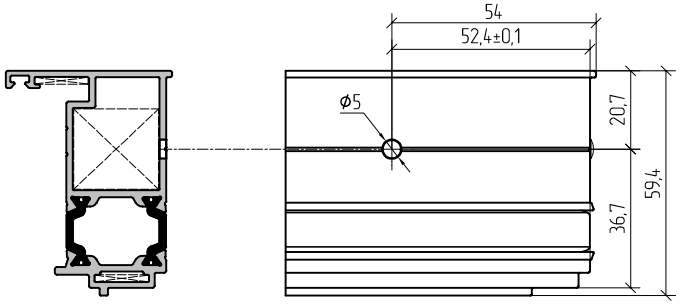

AYPC.W62.0104E and AYPC.W62.0205E profiles corner connection by clamping and using 5x10 pins

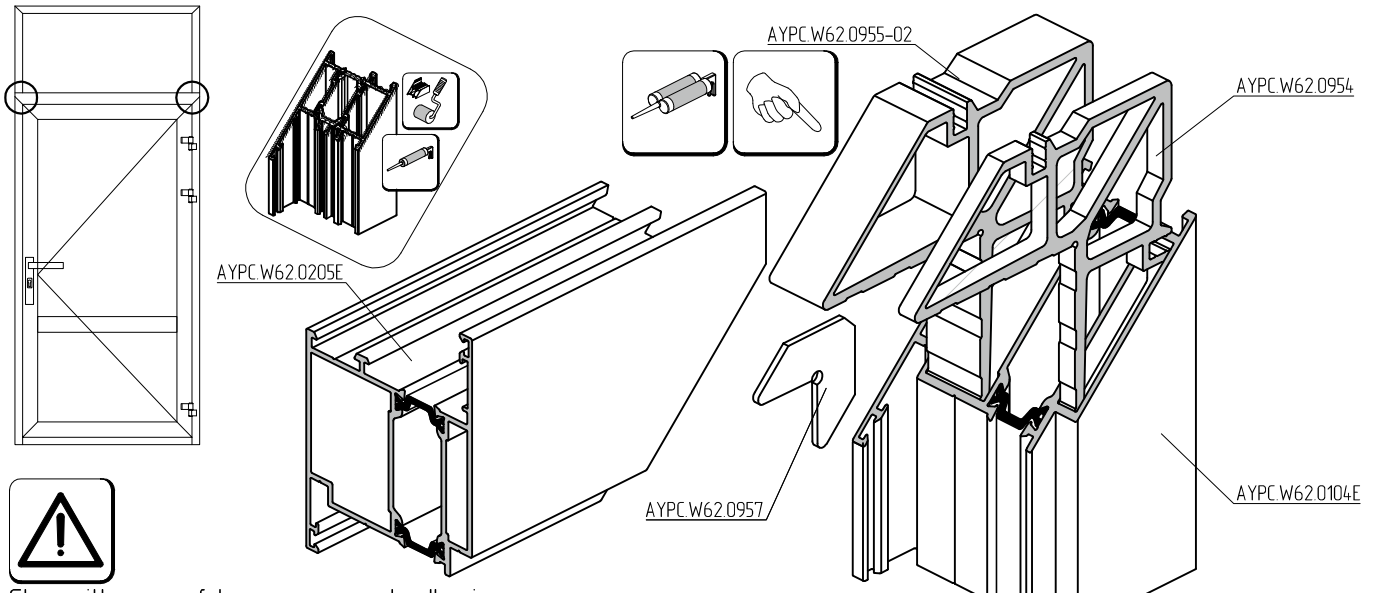

Glue with one- of two- component adhesive for aluminium components before installing clamping corners to the profiles.

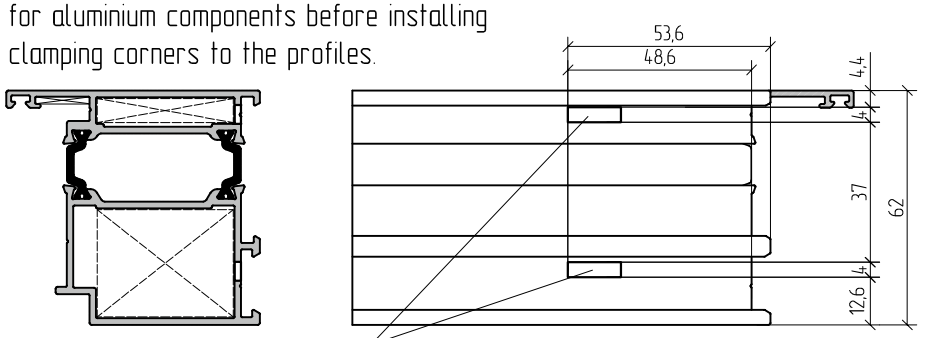

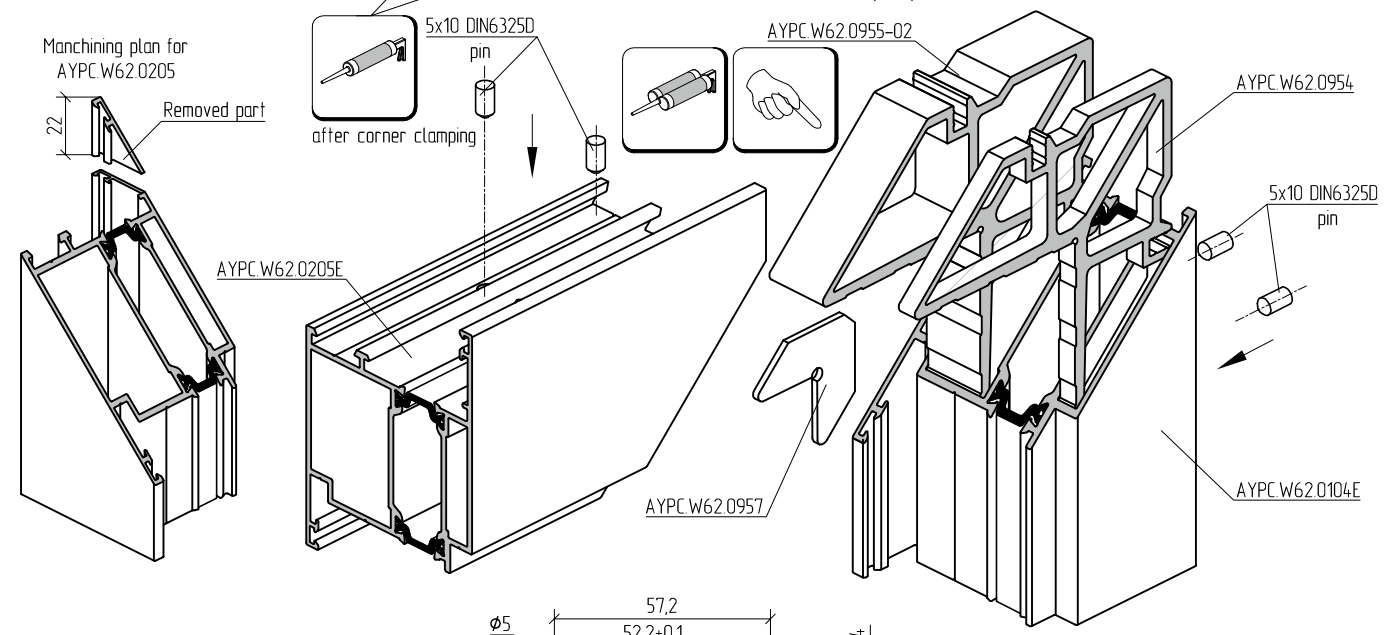

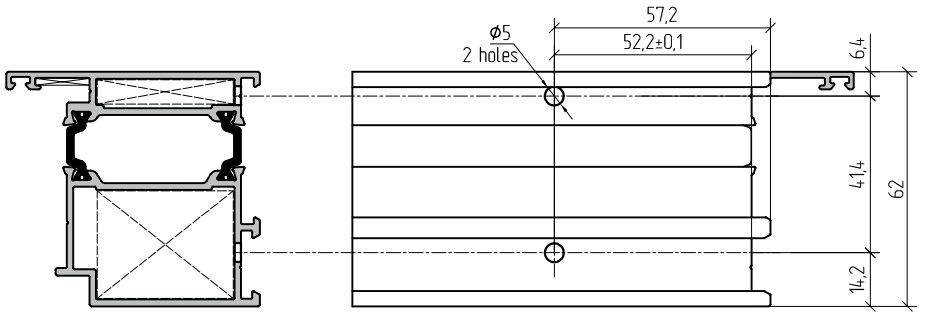

PW72.2
operation N°2

The machining of AYPC.W62.0205E is to be done after cutting.

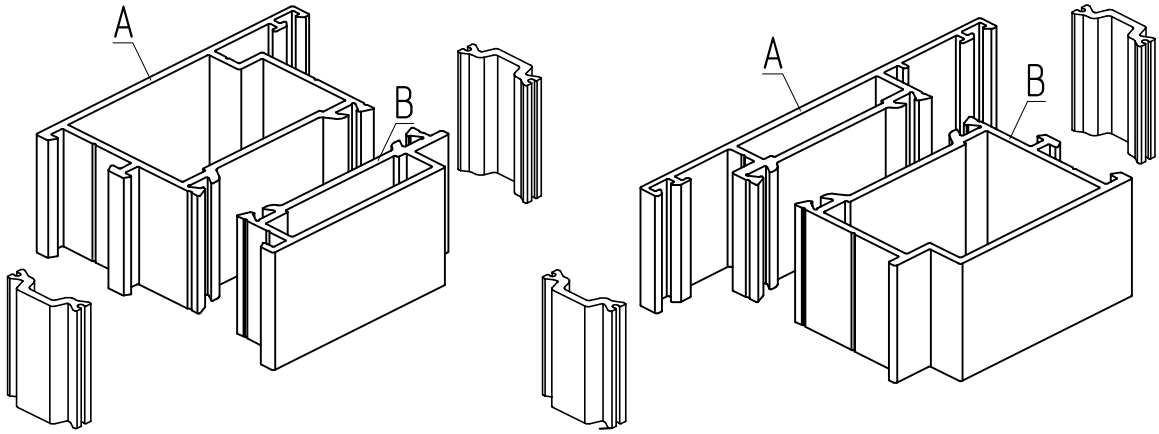

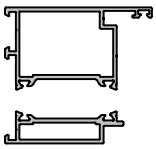	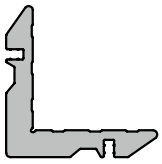	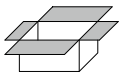	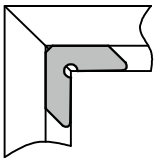	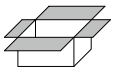
AYPC.W62.0104E (option 1)				
Profile chamber A	AYPC.W62.0955-02	60 pcs	AYPC.W62.0957	200 pcs
Profile chamber B	AYPC.W62.0954	200 pcs	–	–
AYPC.W62.0104E (option 2)				
Profile chamber A	AYPC.W62.0954-01	50 pcs	AYPC.W62.0957	200 pcs
Profile chamber B	AYPC.W62.0954	200 pcs	–	–
AYPC.W62.0105E (option 1)				
Profile chamber A	AYPC.W62.0955-02	60 pcs	AYPC.W62.0957	200 pcs
Profile chamber B	AYPC.W62.0954	200 pcs	–	–
AYPC.W62.0105E (option 2)				
Profile chamber A	AYPC.W62.0954-01	50 pcs	AYPC.W62.0957	200 pcs
Profile chamber B	AYPC.W62.0954	200 pcs	–	–
AYPC.W62.0204E				
Profile chamber A	AYPC.W62.0954	200 pcs	AYPC.W62.0957	200 pcs
Profile chamber B	AYPC.W62.0955-02	60 pcs	AYPC.W62.0912	120 pcs
AYPC.W62.0205E				
Profile chamber A	AYPC.W62.0955-02	60 pcs	AYPC.W62.0957	200 pcs
Profile chamber B	AYPC.W62.0954	200 pcs	AYPC.W62.0912	120 pcs
AYPC.W62.0214E				
Profile chamber A	AYPC.W62.0954	200 pcs	AYPC.W62.0957	200 pcs
Profile chamber B	AYPC.W62.0955-02	60 pcs	AYPC.W62.0912	120 pcs
AYPC.W62.0215E				
Profile chamber A	AYPC.W62.0955-02	60 pcs	AYPC.W62.0957	200 pcs
Profile chamber B	AYPC.W62.0954	200 pcs	AYPC.W62.0912	120 pcs
AYPC.W62.0805E				
Profile chamber A	AYPC.W62.0957	200 pcs	–	–
Profile chamber B	AYPC.W62.0953-04	60 pcs	–	–

AYPC.W62.0101E profiles corner connection using AYPC.W62.0960-01, AYPC.W62.0960-02 pivot corners and 5 x10 pins

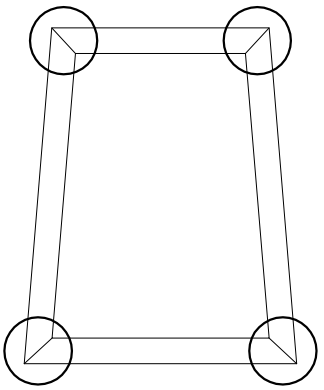

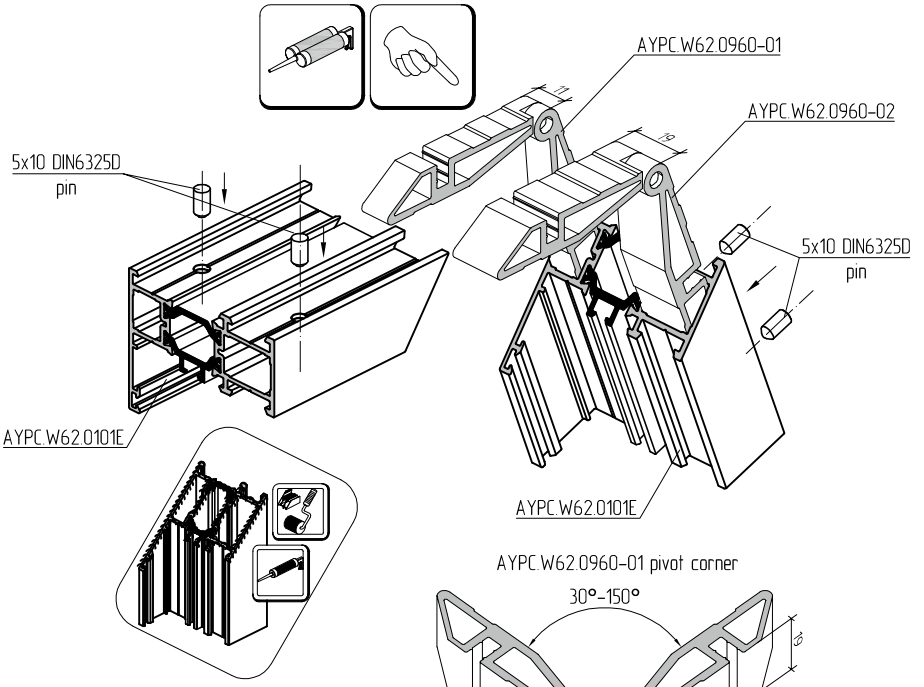

AYPC.W62.0960-01 pivot corner

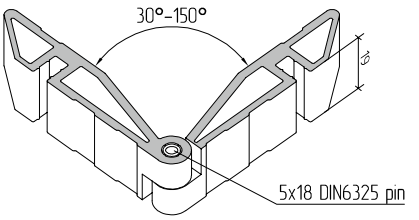

AYPC.W62.0960-02 pivot corner

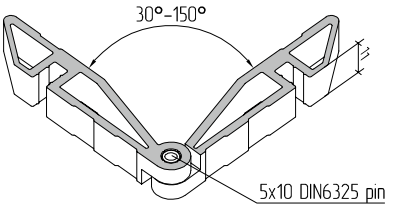

α°	X, mm	α°	X,мм	α°	X, mm	α°	X, mm
30	71,3	61	56,8	92	51,6	123	48,6
31	70,4	62	56,6	93	51,5	124	48,5
32	69,6	63	56,4	94	51,4	125	48,4
33	68,8	64	56,1	95	51,2	126	48,3
34	68,1	65	55,9	96	51,1	127	48,3
35	67,3	66	55,7	97	51,0	128	48,2
36	66,7	67	55,5	98	50,9	129	48,1
37	66,0	68	55,3	99	50,8	130	48,0
38	65,4	69	55,1	100	50,7	131	48,0
39	64,9	70	54,9	101	50,6	132	47,9
40	64,3	71	54,7	102	50,5	133	47,8
41	63,8	72	54,5	103	50,4	134	47,7
42	63,3	73	54,3	104	50,3	135	47,7
43	62,8	74	54,2	105	50,2	136	47,6
44	62,4	75	54,0	106	50,1	137	47,5
45	61,9	76	53,8	107	50,0	138	47,4
46	61,5	77	53,7	108	49,9	139	47,4
47	61,1	78	53,5	109	49,8	140	47,3
48	60,7	79	53,4	110	49,7	141	47,2
49	60,4	80	53,2	111	49,6	142	47,2
50	60,0	81	53,1	112	49,5	143	47,1
51	59,7	82	52,9	113	49,4	144	47,0
52	59,3	83	52,8	114	49,3	145	47,0
53	59,0	84	52,6	115	49,2	146	46,9
54	58,7	85	52,5	116	49,2	147	46,8
55	58,4	86	52,4	117	49,1	148	46,7
56	58,1	87	52,2	118	49,0	149	46,7
57	57,9	88	52,1	119	48,9	150	46,6
58	57,6	89	52,0	120	48,8		
59	57,3	90	51,8	121	48,7		
60	57,1	91	51,7	122	48,7		

A-A

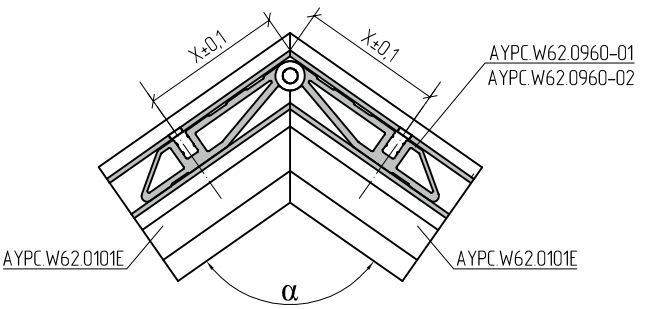

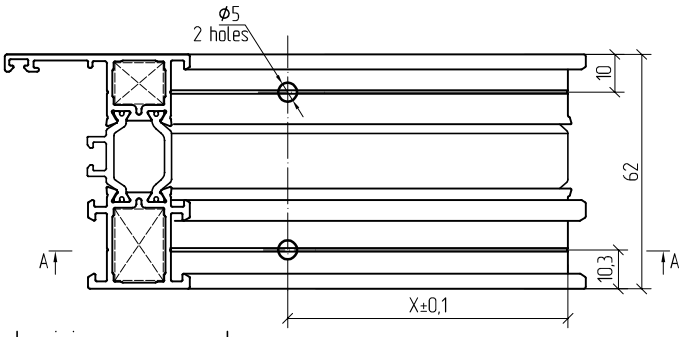

Glue with one- of two- component adhesive for aluminium components before installing clamping corners to the profiles.

AYPC.W62.0201E and AYPC.W62.0221E profiles corner connection using AYPC.W62.0960, AYPC.W62.0960-03 pivot corners and 5x10 pins

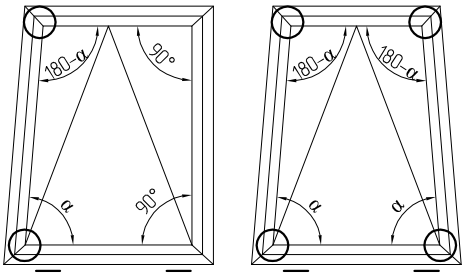

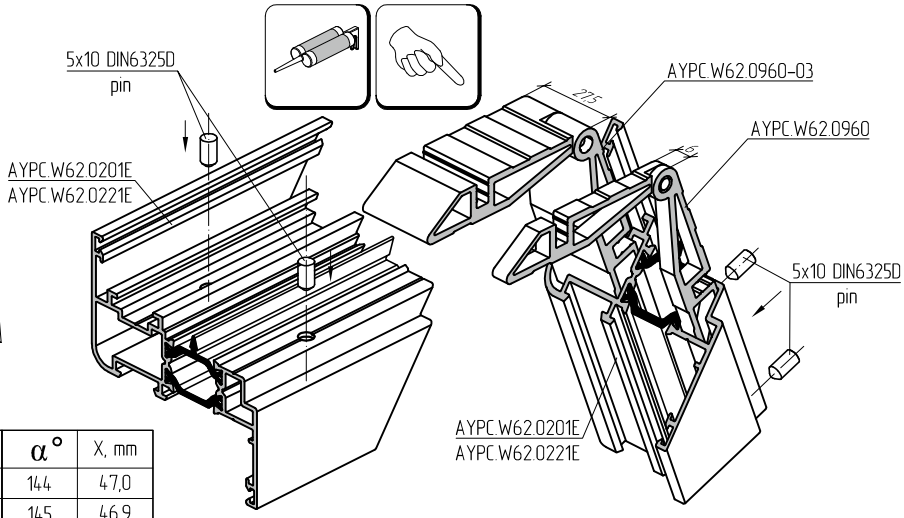

α°	X, mm	α°	X, mm	α°	X, mm	α°	X, mm
78	53,4	100	50,6	122	48,6	144	47,0
79	53,2	101	50,5	123	48,5	145	46,9
80	53,1	102	50,4	124	48,4	146	46,9
81	52,9	103	50,3	125	48,4	147	46,8
82	52,8	104	50,2	126	48,3	148	46,7
83	52,7	105	50,1	127	48,2	149	46,7
84	52,5	106	50,0	128	48,1	150	46,6
85	52,4	107	49,9	129	48,1		
86	52,2	108	49,8	130	48,0		
87	52,1	109	49,7	131	47,9		
88	52,0	110	49,6	132	47,8,		
89	51,9	111	49,5	133	47,8		
90	51,7	112	49,4	134	47,7		
91	51,6	113	49,4	135	47,6		
92	51,5	114	49,3	136	47,5		
93	51,4	115	49,2	137	47,5		
94	51,3	116	49,1	138	47,4		
95	51,2	117	49,0	139	47,3		
96	51,0	118	48,9	140	47,3		
97	50,9	119	48,8	141	47,2		
98	50,8	120	48,8	142	47,1		
99	50,7	121	48,7	143	47,1		

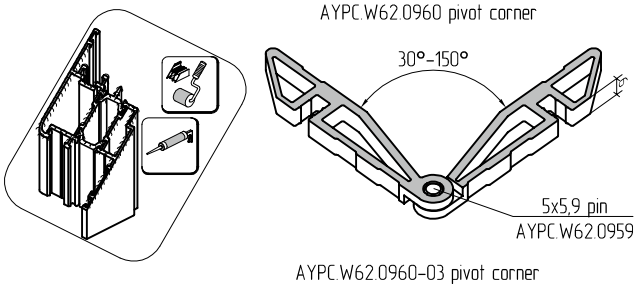

AYPC.W62.0960 pivot corner

AYPC.W62.0960-03 pivot corner

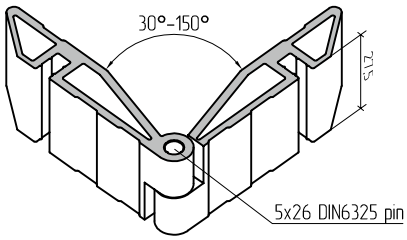

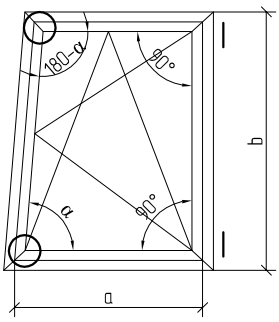

A-A

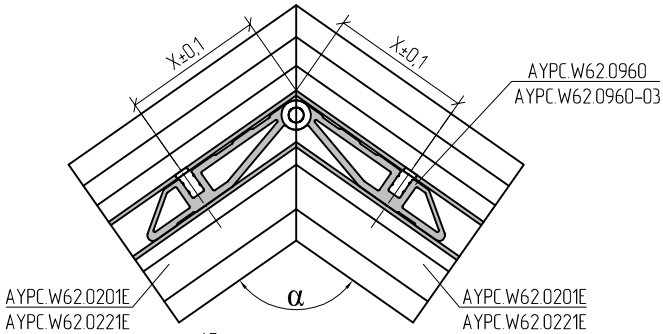

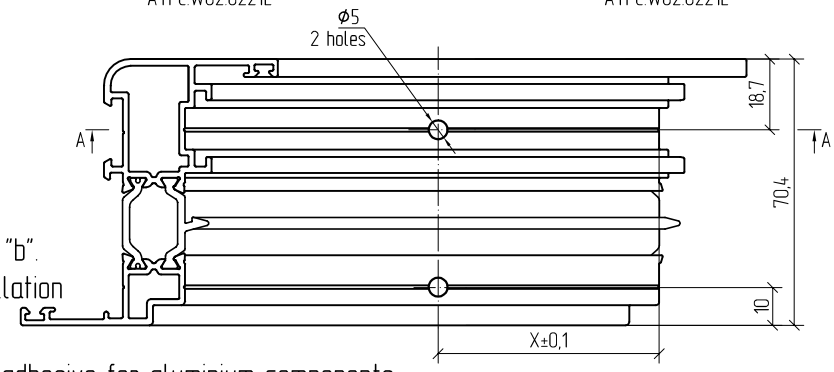

Given that the sash width "a" is not higher than 0,5 of frame height "b". Upon condition that hardware installation is possible.

Glue with one- of two- component adhesive for aluminium components before installing clamping corners to the profiles.

AYPC.W62.0201E and AYPC.W62.0221E profiles corner connection using AYPC.W62.0960, AYPC.W62.0960-03 pivot corners and 5x10 pins

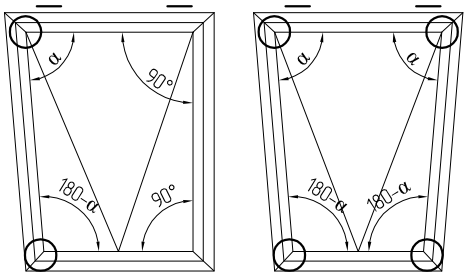

α°	X, мм	α°	X, мм	α°	X, мм	α°	X, мм
78	53,4	100	50,6	122	48,6	144	47,0
79	53,2	101	50,5	123	48,5	145	46,9
80	53,1	102	50,4	124	48,4	146	46,9
81	52,9	103	50,3	125	48,4	147	46,8
82	52,8	104	50,2	126	48,3	148	46,7
83	52,7	105	50,1	127	48,2	149	46,7
84	52,5	106	50,0	128	48,1	150	46,6
85	52,4	107	49,9	129	48,1		
86	52,2	108	49,8	130	48,0		
87	52,1	109	49,7	131	47,9		
88	52,0	110	49,6	132	47,8,		
89	51,9	111	49,5	133	47,8		
90	51,7	112	49,4	134	47,7		
91	51,6	113	49,4	135	47,6		
92	51,5	114	49,3	136	47,5		
93	51,4	115	49,2	137	47,5		
94	51,3	116	49,1	138	47,4		
95	51,2	117	49,0	139	47,3		
96	51,0	118	48,9	140	47,3		
97	50,9	119	48,8	141	47,2		
98	50,8	120	48,8	142	47,1		
99	50,7	121	48,7	143	47,1		

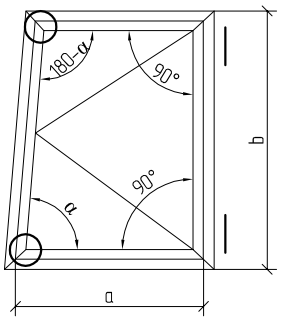

α°	X, мм	α°	X, мм	α°	X, мм	α°	X, мм
30	71,0	61	56,7	92	51,5	123	48,5
31	70,1	62	56,4	93	51,4	124	48,4
32	69,3	63	56,2	94	51,3	125	48,4
33	68,5	64	56,0	95	51,2	126	48,3
34	67,7	65	55,8	96	51,0	127	48,2
35	67,0	66	55,5	97	50,9	128	48,1
36	66,4	67	55,3	98	50,8	129	48,1
37	65,7	68	55,1	99	50,7	130	48,0
38	65,1	69	54,9	100	50,6	131	47,9
39	64,6	70	54,8	101	50,5	132	47,8,
40	64,0	71	54,6	102	50,4	133	47,8
41	63,5	72	54,4	103	50,3	134	47,7
42	63,0	73	54,2	104	50,2	135	47,6
43	62,6	74	54,0	105	50,1	136	47,5
44	62,1	75	53,9	106	50,0	137	47,5
45	61,7	76	53,7	107	49,9	138	47,4
46	61,3	77	53,6	108	49,8	139	47,3
47	60,9	78	53,4	109	49,7	140	47,3
48	60,5	79	53,2	110	49,6	141	47,2
49	60,1	80	53,1	111	49,5	142	47,1
50	59,8	81	52,9	112	49,4	143	47,1
51	59,5	82	52,8	113	49,4	144	47,0
52	59,1	83	52,7	114	49,3	145	46,9
53	58,8	84	52,5	115	49,2	146	46,9
54	58,5	85	52,4	116	49,1	147	46,8
55	58,2	86	52,2	117	49,0	148	46,7
56	57,9	87	52,1	118	48,9	149	46,7
57	57,7	88	52,0	119	48,8	150	46,6
58	57,4	89	51,9	120	48,8		
59	57,1	90	51,7	121	48,7		
60	56,9	91	51,6	122	48,6		

Given that the sash width "a" is not higher than 0,5 of frame height "b". Upon condition that hardware installation is possible.

AYPC.W62.0301E profiles corner connection using AYPC.W62.0960-01, AYPC.W62.0960-02 pivot corners and 5 x10 pins

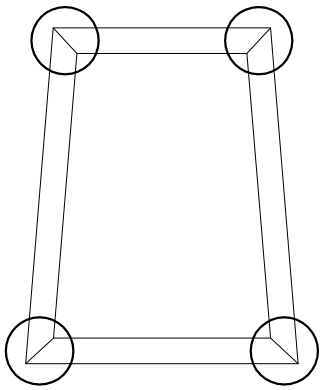

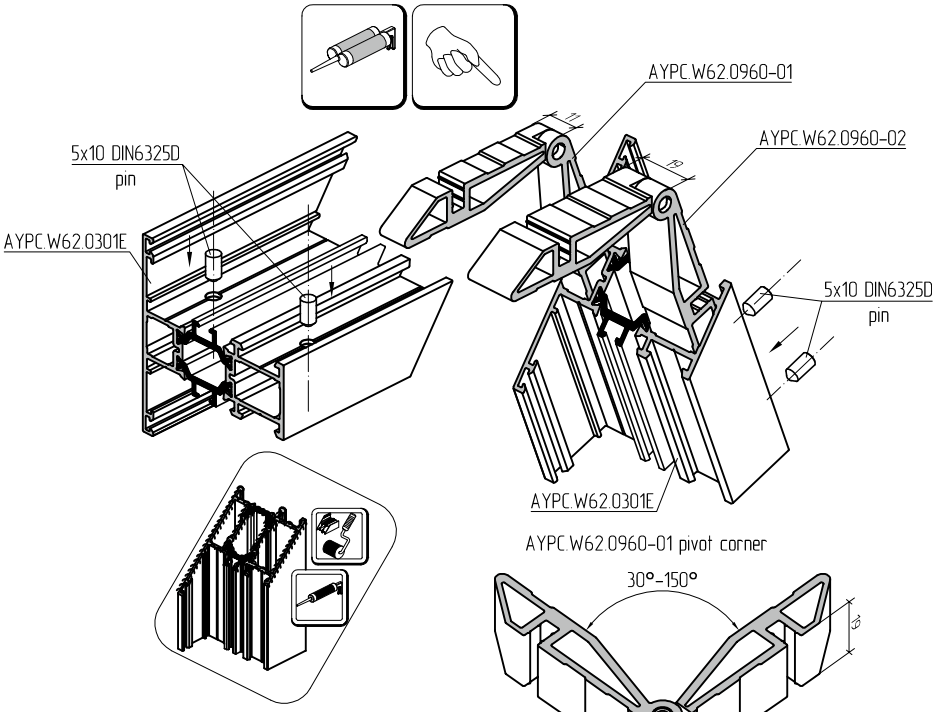

AYPC.W62.0960-01 pivot corner

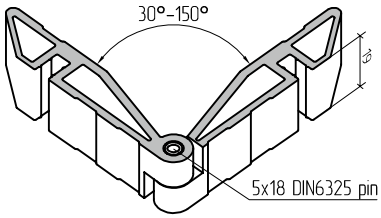

AYPC.W62.0960-02 pivot corner

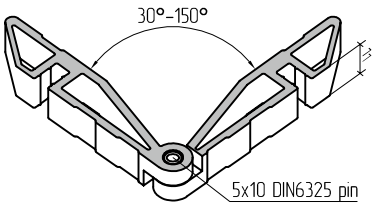

α°	X, mm	α°	X, mm	α°	X, mm	α°	X, mm
30	71,3	61	56,8	92	51,6	123	48,6
31	70,4	62	56,6	93	51,5	124	48,5
32	69,6	63	56,4	94	51,4	125	48,4
33	68,8	64	56,1	95	51,2	126	48,3
34	68,1	65	55,9	96	51,1	127	48,3
35	67,3	66	55,7	97	51,0	128	48,2
36	66,7	67	55,5	98	50,9	129	48,1
37	66,0	68	55,3	99	50,8	130	48,0
38	65,4	69	55,1	100	50,7	131	48,0
39	64,9	70	54,9	101	50,6	132	47,9
40	64,3	71	54,7	102	50,5	133	47,8
41	63,8	72	54,5	103	50,4	134	47,7
42	63,3	73	54,3	104	50,3	135	47,7
43	62,8	74	54,2	105	50,2	136	47,6
44	62,4	75	54,0	106	50,1	137	47,5
45	61,9	76	53,8	107	50,0	138	47,4
46	61,5	77	53,7	108	49,9	139	47,4
47	61,1	78	53,5	109	49,8	140	47,3
48	60,7	79	53,4	110	49,7	141	47,2
49	60,4	80	53,2	111	49,6	142	47,2
50	60,0	81	53,1	112	49,5	143	47,1
51	59,7	82	52,9	113	49,4	144	47,0
52	59,3	83	52,8	114	49,3	145	47,0
53	59,0	84	52,6	115	49,2	146	46,9
54	58,7	85	52,5	116	49,2	147	46,8
55	58,4	86	52,4	117	49,1	148	46,7
56	58,1	87	52,2	118	49,0	149	46,7
57	57,9	88	52,1	119	48,9	150	46,6
58	57,6	89	52,0	120	48,8		
59	57,3	90	51,8	121	48,7		
60	57,1	91	51,7	122	48,7		

A-A

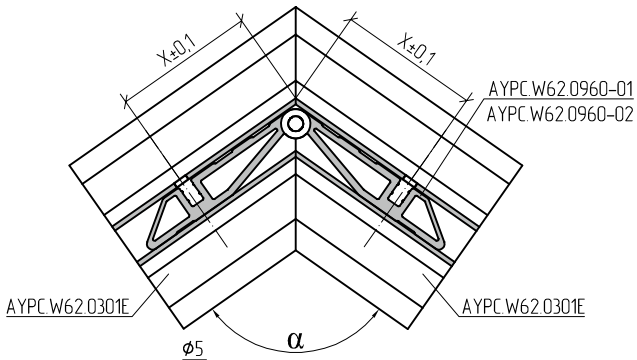

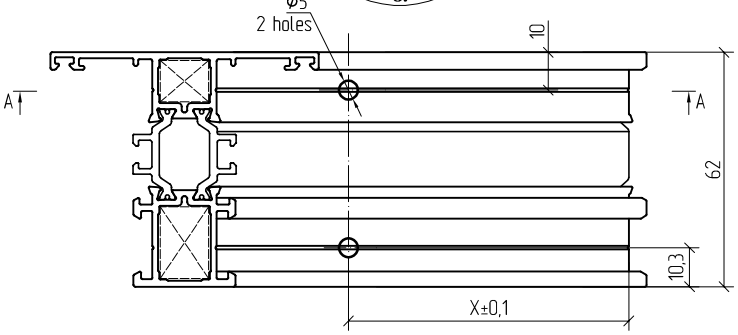

Glue with one- of two- component adhesive for aluminium components before installing clamping corners to the profiles.

AYPC.W62.0102E profiles corner connection using AYPC.W62.0962-01, AYPC.W62.0962-02 pivot corners and 5 x10 pins

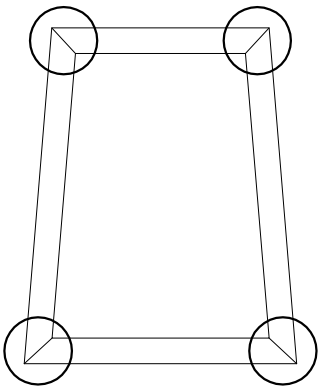

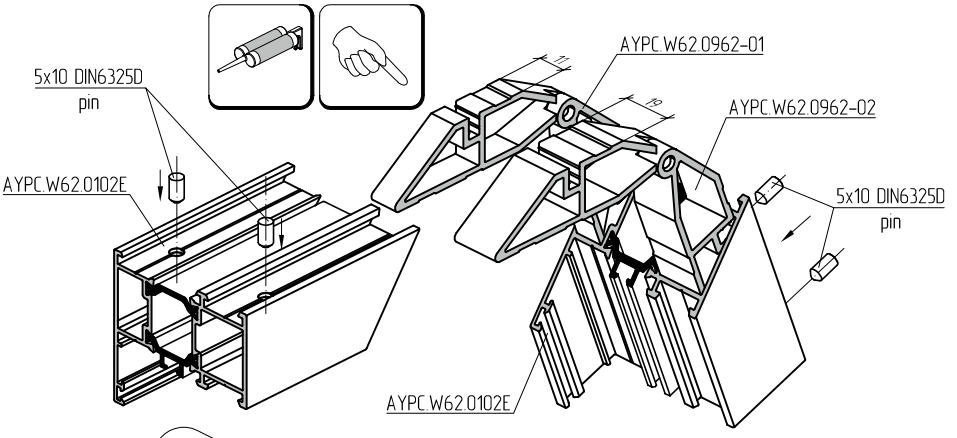

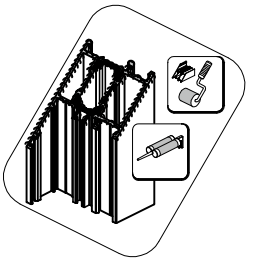

AYPC.W62.0962-01 pivot corner

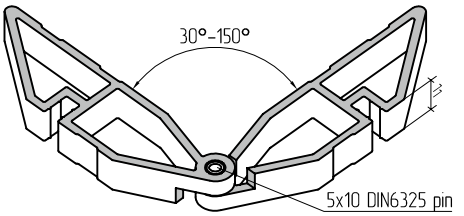

AYPC.W62.0962-02 pivot corner

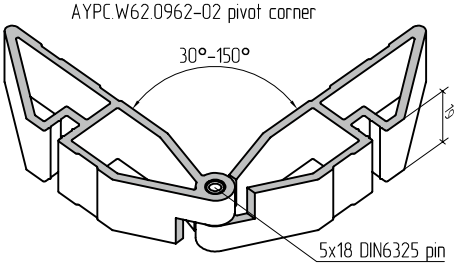

α°	X, mm	α°	X, mm	α°	X, mm	α°	X, mm
30	115,0	61	76,7	92	62,9	123	54,9
31	112,6	62	76,1	93	62,6	124	54,7
32	110,4	63	75,4	94	62,3	125	54,5
33	108,3	64	74,9	95	62,0	126	54,3
34	106,3	65	74,3	96	61,7	127	54,1
35	104,5	66	73,7	97	61,4	128	53,9
36	102,7	67	73,2	98	61,1	129	53,7
37	101,0	68	72,6	99	60,8	130	53,5
38	99,4	69	72,1	100	60,5	131	53,3
39	97,9	70	71,6	101	60,2	132	53,1
40	96,5	71	71,1	102	60,0	133	52,9
41	95,1	72	70,6	103	59,7	134	52,7
42	93,8	73	70,2	104	59,4	135	52,5
43	92,5	74	69,7	105	59,2	136	52,3
44	91,3	75	69,3	106	58,9	137	52,1
45	90,2	76	68,8	107	58,6	138	51,9
46	89,1	77	68,4	108	58,4	139	51,7
47	88,0	78	68,0	109	58,1	140	51,6
48	87,0	79	67,6	110	57,9	141	51,4
49	86,0	80	67,2	111	57,6	142	51,2
50	85,1	81	66,8	112	57,4	143	51,0
51	84,2	82	66,4	113	57,2	144	50,8
52	83,3	83	66,0	114	56,9	145	50,6
53	82,5	84	65,6	115	56,7	146	50,5
54	81,7	85	65,3	116	56,5	147	50,3
55	80,9	86	64,9	117	56,2	148	50,1
56	80,1	87	64,6	118	56,0	149	49,9
57	79,4	88	64,2	119	55,8	150	49,7
58	78,7	89	63,9	120	55,6		
59	78,0	90	63,5	121	55,4		
60	77,3	91	63,2	122	55,1		

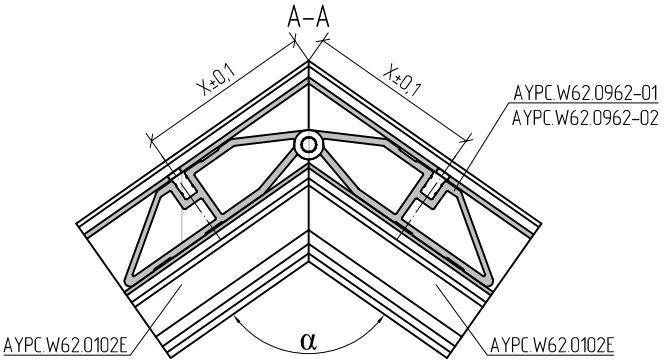

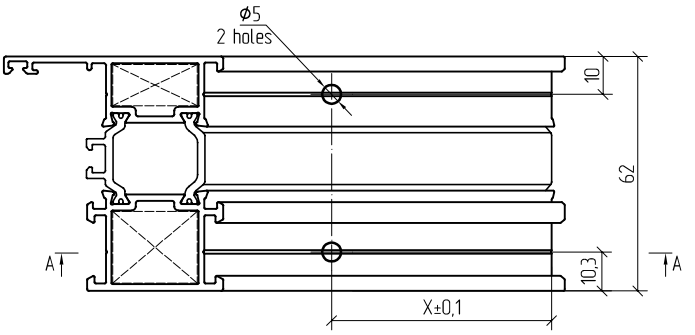

Glue with one- of two- component adhesive for aluminium components before installing clamping corners to the profiles.

AYPC.W62.0202E and AYPC.W62.0222E profiles corner connection using AYPC.W62.0962, AYPC.W62.0962-03 pivot corners and 5x10 pins

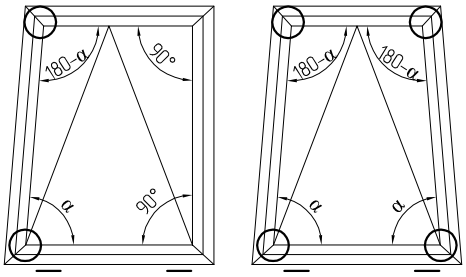

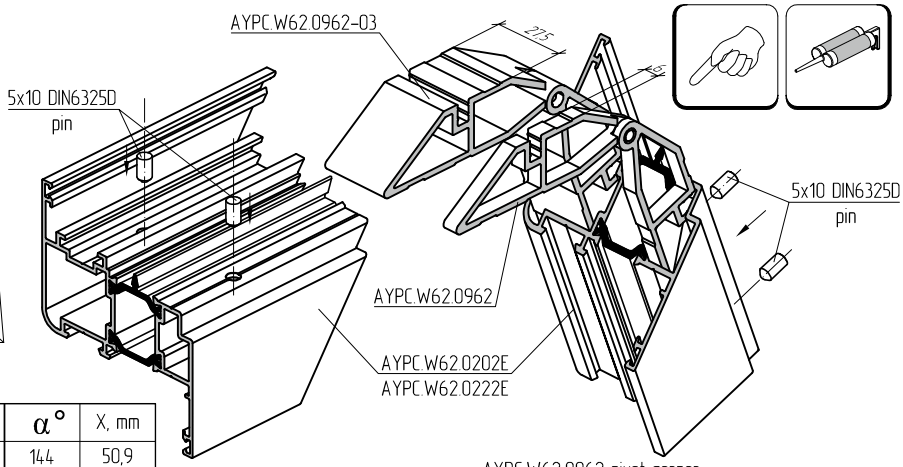

α°	X, mm	α°	X, mm	α°	X, mm	α°	X, mm
78	68,2	100	60,7	122	55,3	144	50,9
79	67,8	101	60,4	123	55,0	145	50,7
80	67,4	102	60,1	124	54,8	146	50,5
81	67,0	103	59,8	125	54,6	147	50,3
82	66,6	104	59,6	126	54,4	148	50,2
83	66,2	105	59,3	127	54,2	149	50,0
84	65,8	106	59,0	128	54,0	150	49,8
85	65,5	107	58,8	129	53,8		
86	65,1	108	58,5	130	53,6		
87	64,8	109	58,3	131	53,4		
88	64,4	110	58,0	132	53,2		
89	64,1	111	57,8	133	53,0		
90	63,7	112	57,5	134	52,8		
91	63,4	113	57,3	135	52,6		
92	63,1	114	57,1	136	52,4		
93	62,8	115	56,8	137	52,2		
94	62,5	116	56,6	138	52,0		
95	62,1	117	56,4	139	51,8		
96	61,8	118	56,1	140	51,6		
97	61,5	119	55,9	141	51,4		
98	61,3	120	55,7	142	51,3		
99	61,0	121	55,5	143	51,1		

AYPC.W62.0962 pivot corner

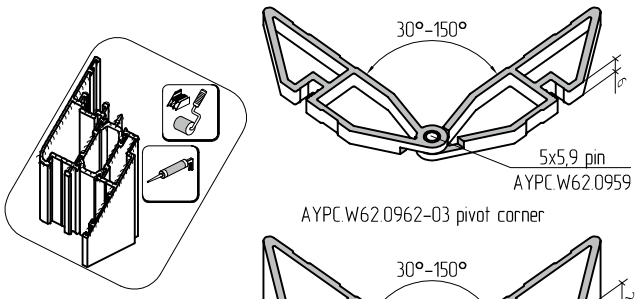

AYPC.W62.0962-03 pivot corner

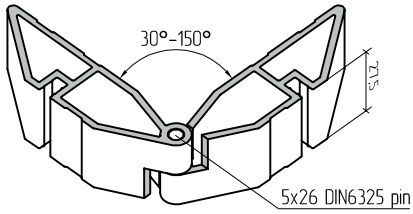

A-A

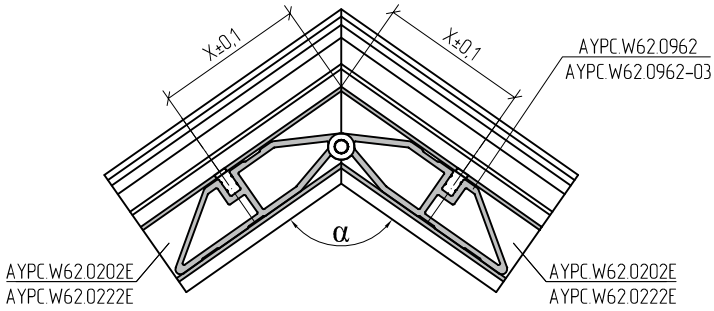

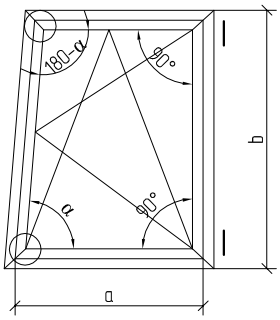

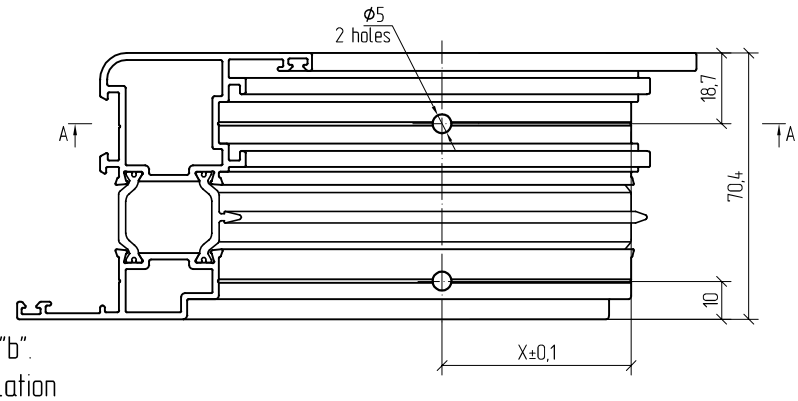

Given that the sash width "a" is not higher than 0,5 of frame height "b". Upon condition that hardware installation is possible.

Glue with one- of two- component adhesive for aluminium components before installing clamping corners to the profiles.

AYPC.W62.0202E and AYPC.W62.0222E profiles corner connection using AYPC.W62.0962, AYPC.W62.0962-03 pivot corners and 5x10 pins

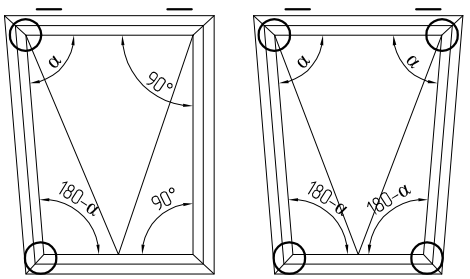

α°	X, mm	α°	X, mm	α°	X, mm	α°	X, mm
78	68,2	100	60,7	122	55,3	144	50,9
79	67,8	101	60,4	123	55,0	145	50,7
80	67,4	102	60,1	124	54,8	146	50,5
81	67,0	103	59,8	125	54,6	147	50,3
82	66,6	104	59,6	126	54,4	148	50,2
83	66,2	105	59,3	127	54,2	149	50,0
84	65,8	106	59,0	128	54,0	150	49,8
85	65,5	107	58,8	129	53,8		
86	65,1	108	58,5	130	53,6		
87	64,8	109	58,3	131	53,4		
88	64,4	110	58,0	132	53,2		
89	64,1	111	57,8	133	53,0		
90	63,7	112	57,5	134	52,8		
91	63,4	113	57,3	135	52,6		
92	63,1	114	57,1	136	52,4		
93	62,8	115	56,8	137	52,2		
94	62,5	116	56,6	138	52,0		
95	62,1	117	56,4	139	51,8		
96	61,8	118	56,1	140	51,6		
97	61,5	119	55,9	141	51,4		
98	61,3	120	55,7	142	51,3		
99	61,0	121	55,5	143	51,1		

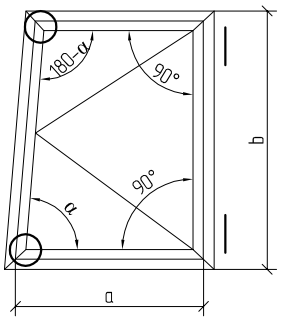

α°	X, mm	α°	X, mm	α°	X, mm	α°	X, mm
30	115,8	61	77,0	92	63,1	123	55,0
31	113,4	62	76,4	93	62,8	124	54,8
32	111,1	63	75,8	94	62,5	125	54,6
33	109,0	64	75,2	95	62,1	126	54,4
34	107,0	65	74,6	96	61,8	127	54,2
35	105,1	66	74,0	97	61,5	128	54,0
36	130,3	67	73,5	98	61,3	129	53,8
37	101,6	68	72,9	99	61,0	130	53,6
38	100,0	69	72,4	100	60,7	131	53,4
39	98,5	70	71,9	101	60,4	132	53,2
40	97,0	71	71,4	102	60,1	133	53,0
41	95,6	72	70,9	103	59,8	134	52,8
42	94,3	73	70,4	104	59,6	135	52,6
43	93,0	74	70,0	105	59,3	136	52,4
44	91,8	75	69,5	106	59,0	137	52,2
45	90,7	76	69,1	107	58,8	138	52,0
46	89,6	77	68,6	108	58,5	139	51,8
47	88,5	78	68,2	109	58,3	140	51,6
48	87,5	79	67,8	110	58,0	141	51,4
49	86,5	80	67,4	111	57,8	142	51,3
50	85,5	81	67,0	112	57,5	143	51,1
51	84,6	82	66,6	113	57,3	144	50,9
52	83,7	83	66,2	114	57,1	145	50,7
53	82,9	84	65,8	115	56,8	146	50,5
54	82,1	85	65,5	116	56,6	147	50,3
55	81,3	86	65,1	117	56,4	148	50,2
56	80,5	87	64,8	118	56,1	149	50,0
57	79,8	88	64,4	119	55,9	150	49,8
58	79,0	89	64,1	120	55,7		
59	78,4	90	63,7	121	55,5		
60	77,7	91	63,4	122	55,3		

Given that the sash width "a" is not higher than 0,5 of frame height "b". Upon condition that hardware installation is possible.

AYPC.W62.0302E profiles corner connection using AYPC.W62.0962-01, AYPC.W62.0962-02 pivot corners and 5 x10 pins

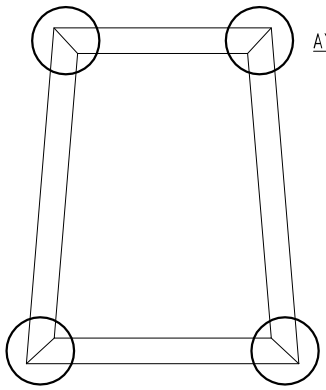

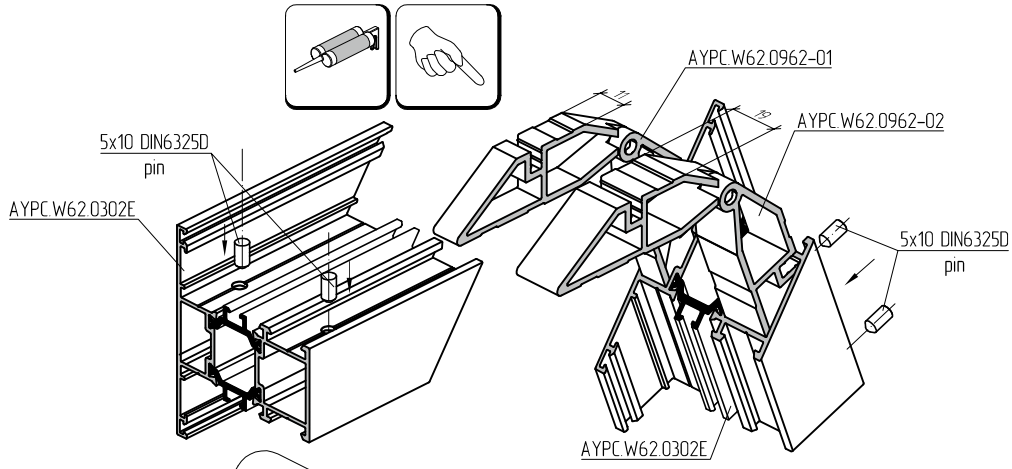

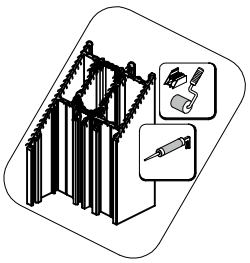

AYPC.W62.0962-01 pivot corner

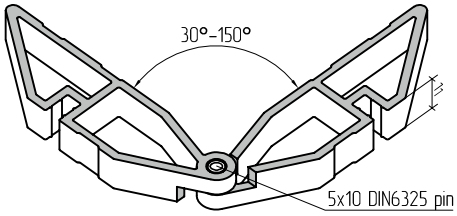

AYPC.W62.0962-02 pivot corner

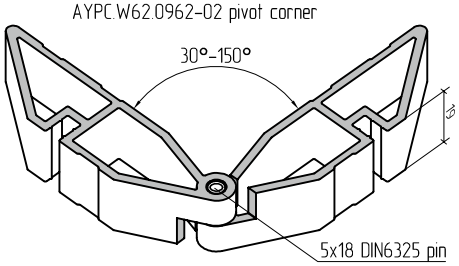

α°	X, mm	α°	X, mm	α°	X, mm	α°	X, mm
30	115,0	61	76,7	92	62,9	123	54,9
31	112,6	62	76,1	93	62,6	124	54,7
32	110,4	63	75,4	94	62,3	125	54,5
33	108,3	64	74,9	95	62,0	126	54,3
34	106,3	65	74,3	96	61,7	127	54,1
35	104,5	66	73,7	97	61,4	128	53,9
36	102,7	67	73,2	98	61,1	129	53,7
37	101,0	68	72,6	99	60,8	130	53,5
38	99,4	69	72,1	100	60,5	131	53,3
39	97,9	70	71,6	101	60,2	132	53,1
40	96,5	71	71,1	102	60,0	133	52,9
41	95,1	72	70,6	103	59,7	134	52,7
42	93,8	73	70,2	104	59,4	135	52,5
43	92,5	74	69,7	105	59,2	136	52,3
44	91,3	75	69,3	106	58,9	137	52,1
45	90,2	76	68,8	107	58,6	138	51,9
46	89,1	77	68,4	108	58,4	139	51,7
47	88,0	78	68,0	109	58,1	140	51,6
48	87,0	79	67,6	110	57,9	141	51,4
49	86,0	80	67,2	111	57,6	142	51,2
50	85,1	81	66,8	112	57,4	143	51,0
51	84,2	82	66,4	113	57,2	144	50,8
52	83,3	83	66,0	114	56,9	145	50,6
53	82,5	84	65,6	115	56,7	146	50,5
54	81,7	85	65,3	116	56,5	147	50,3
55	80,9	86	64,9	117	56,2	148	50,1
56	80,1	87	64,6	118	56,0	149	49,9
57	79,4	88	64,2	119	55,8	150	49,7
58	78,7	89	63,9	120	55,6		
59	78,0	90	63,5	121	55,4		
60	77,3	91	63,2	122	55,1		

A-A

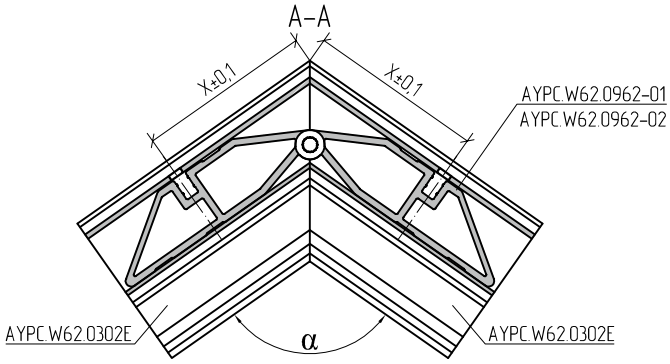

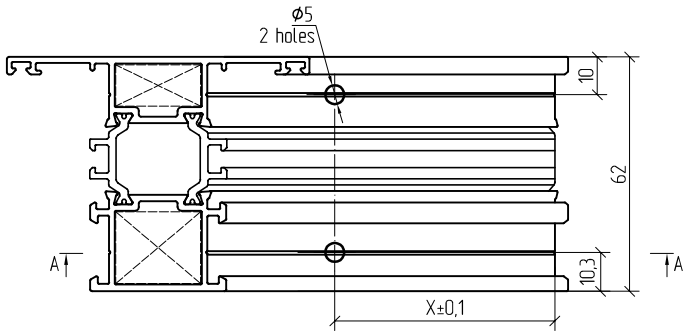

Glue with one- of two- component adhesive for aluminium components before installing clamping corners to the profiles.

Door leaf bottom part machining and assemblage. Exterior opening single and double door

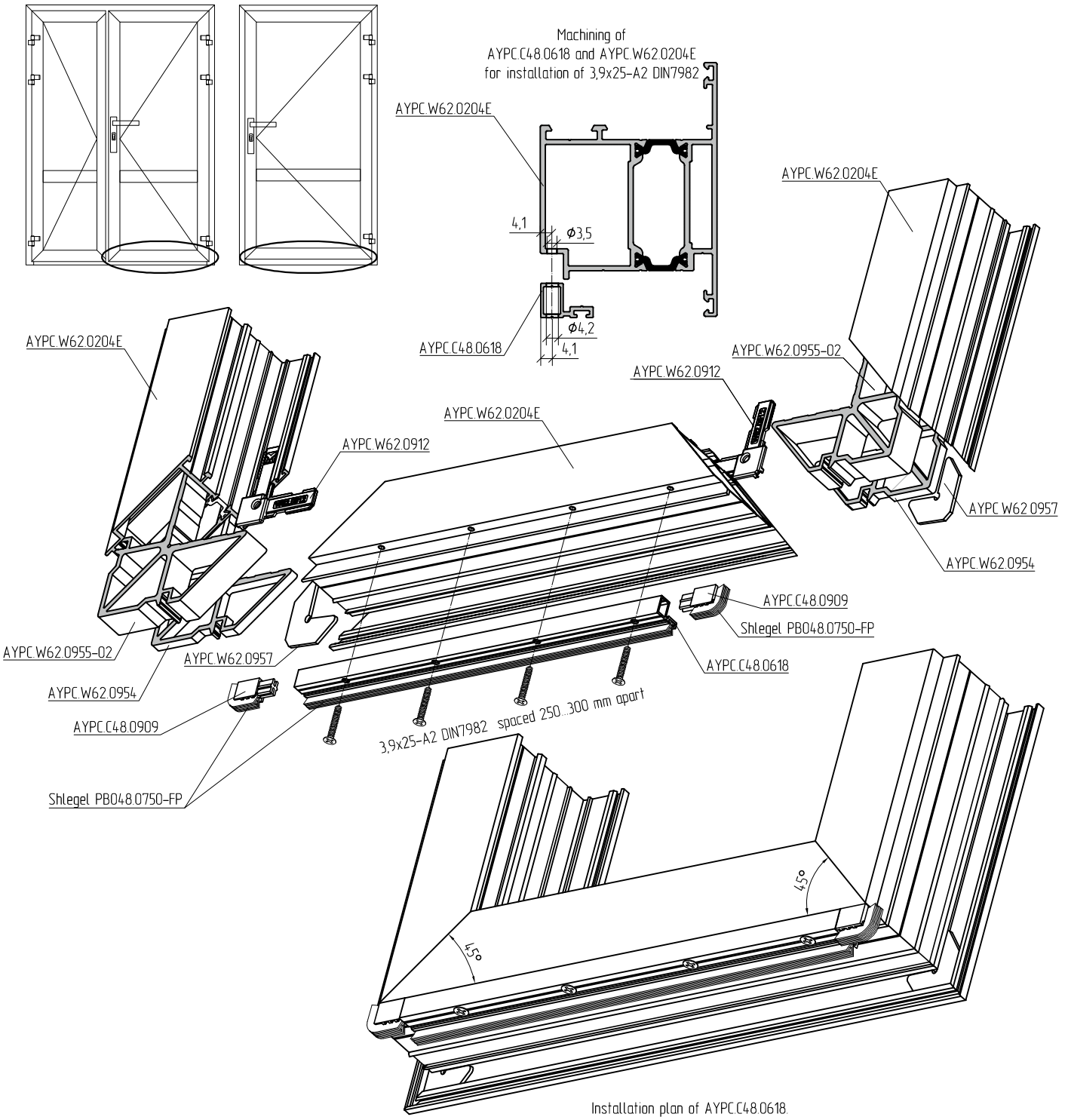

Installation plan of AYPC.C48.0618.

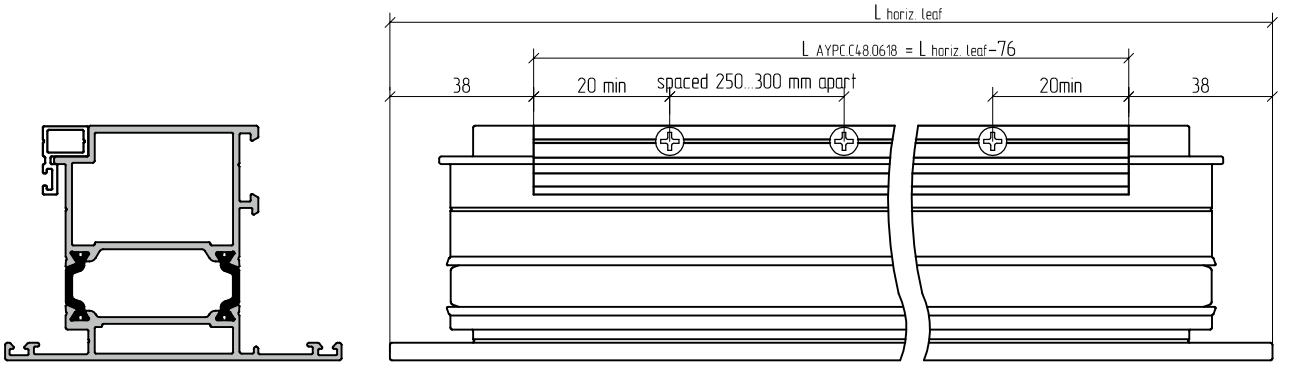

Machining and assemblage of passive door leaf bottom part. Exterior opening double door. Without double casement profile

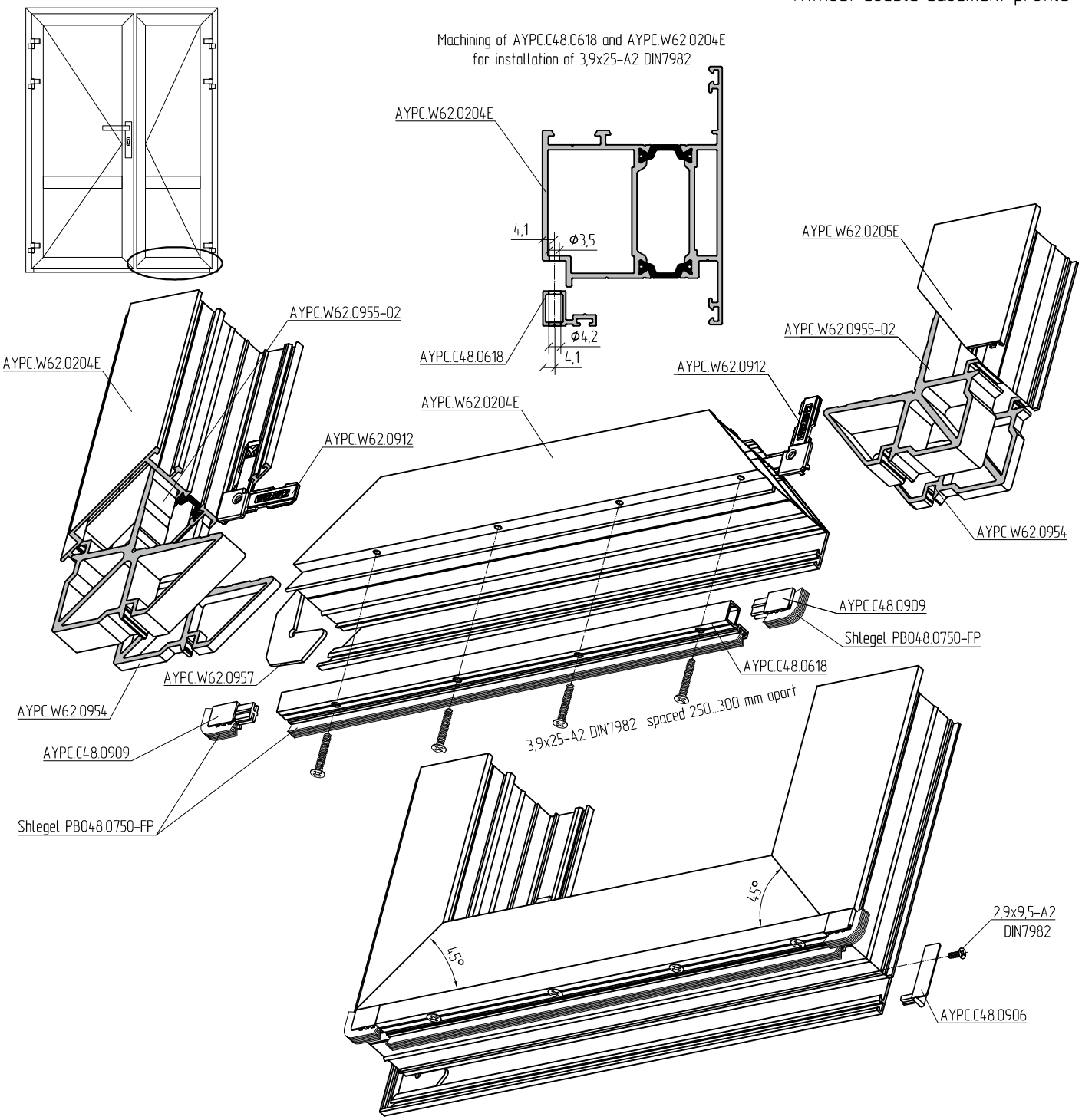

Installation plan of AYPC.C48.0618.

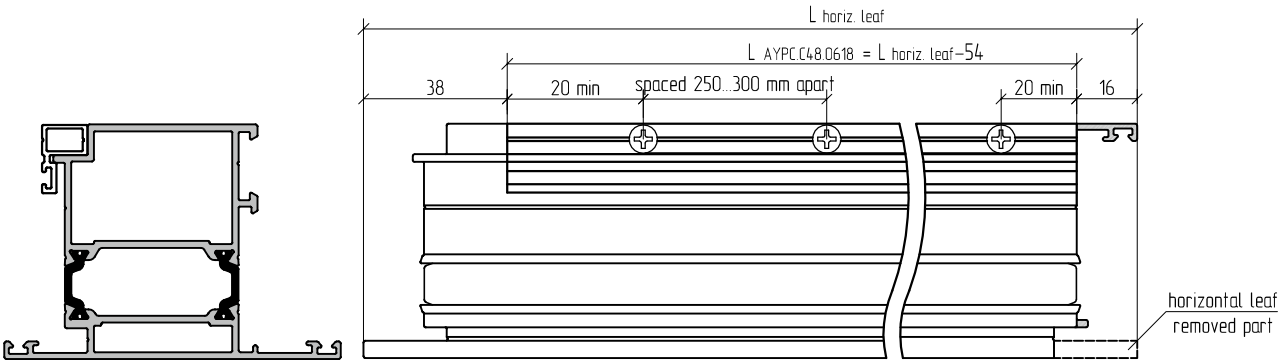

Door leaf bottom part machining and assemblage. Exterior opening single and double door with basement

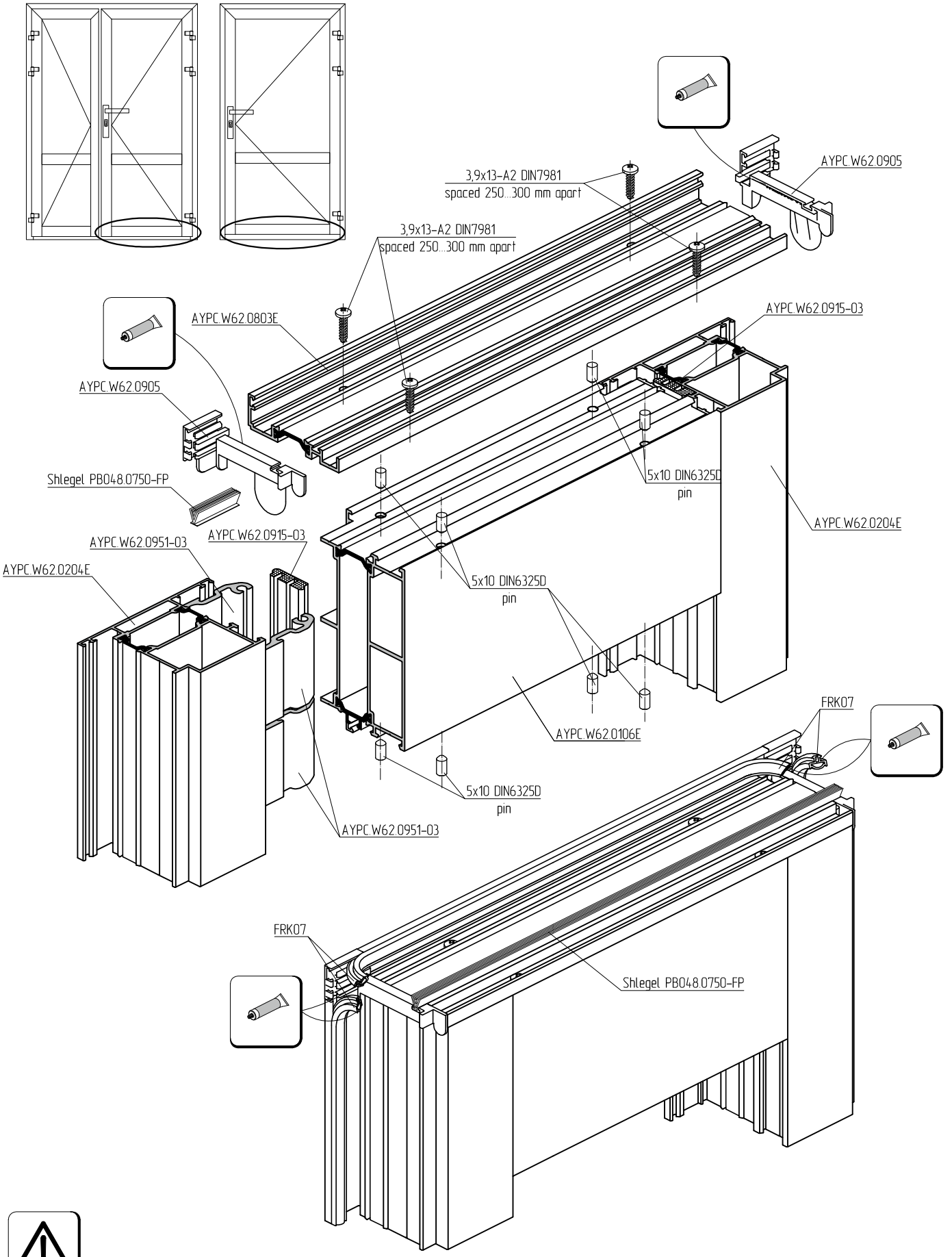

Just one 5x10 DIN6325 pin from the kit AYPC.W62.951-03 is used.

Door leaf bottom part machining and assemblage. Exterior opening double and single door with basement

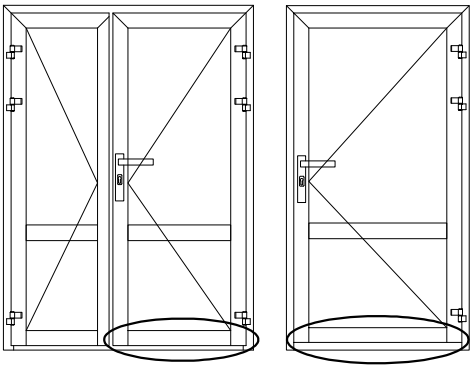

Installation of AYPC.W62.0951-03 elements on AYPC.W62.0204E profile

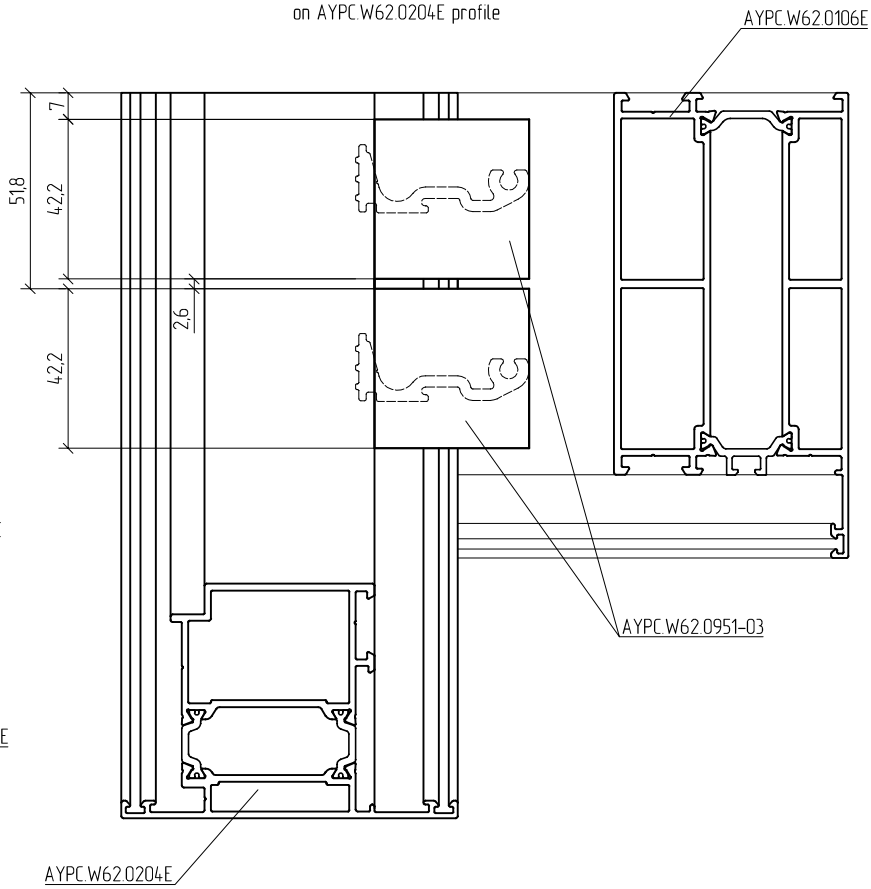

Machining of AYPC.W62.0106E and AYPC.W62.0803E for installation of 3,9x13-A2 DIN7981

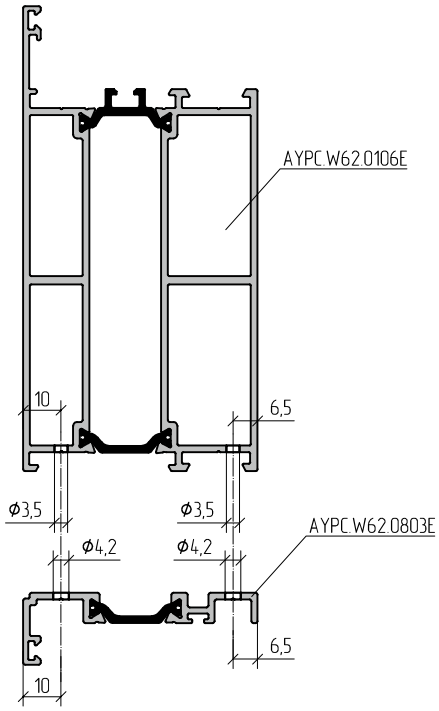

Installation plan of AYPC.W62.0803E.

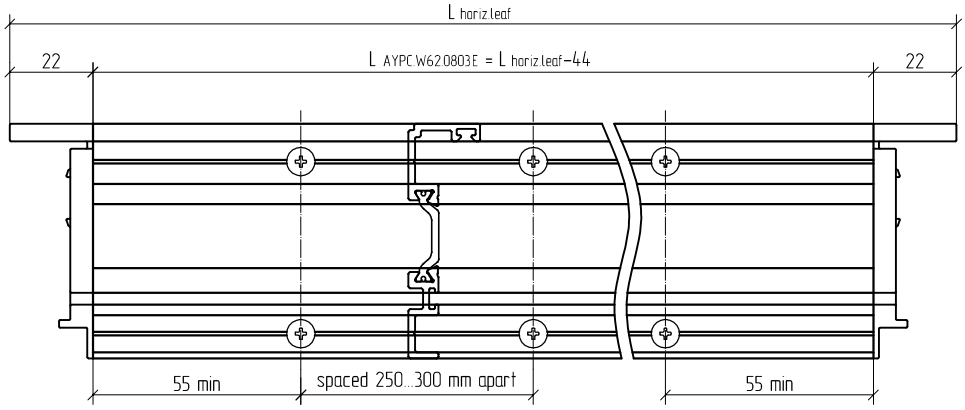

Machining and assemblage of passive door leaf bottom part. Exterior opening double door with basement. Without double casement profile

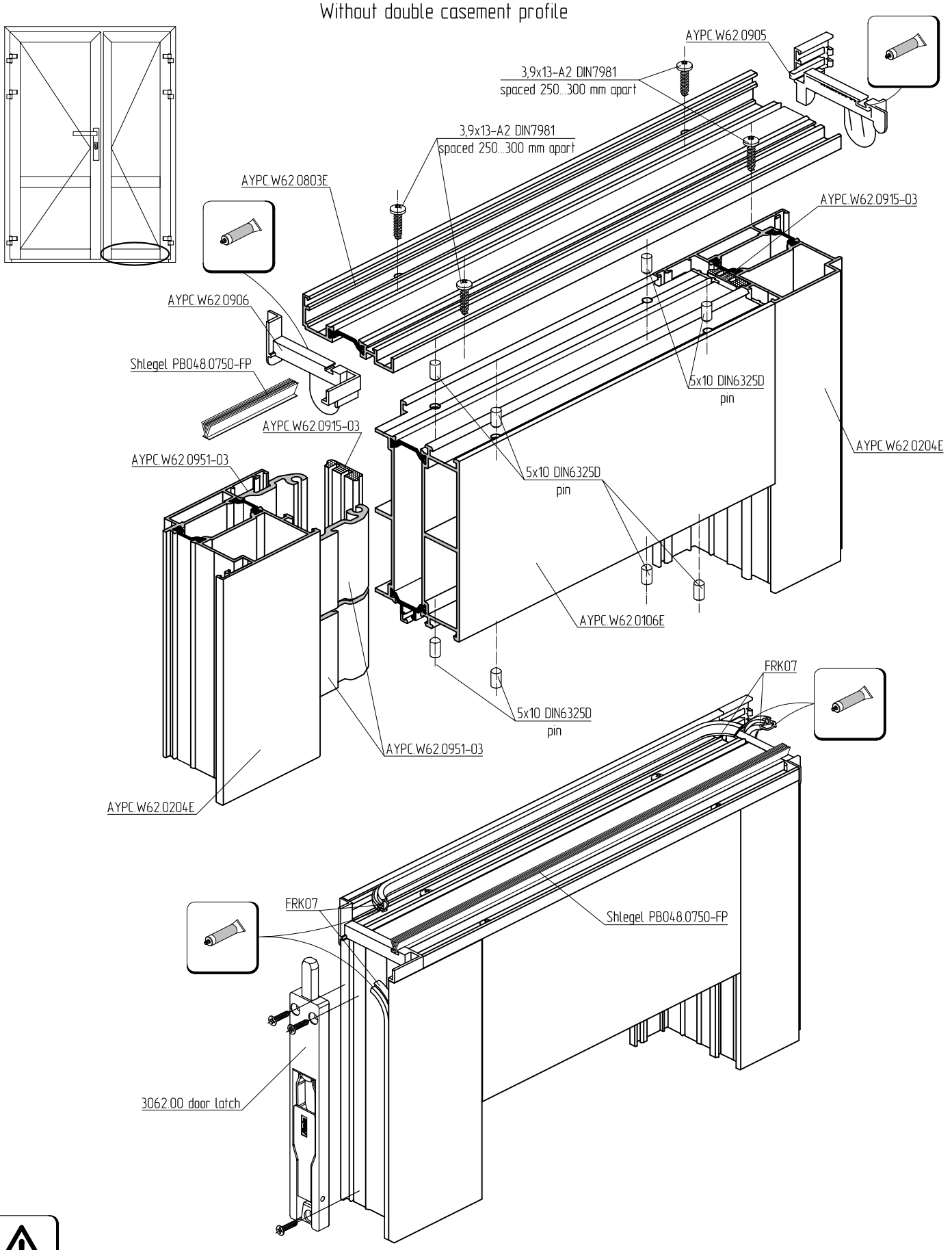

Just one 5x10 DIN6325 pin from the kit AYPC.W62.951-03 is used.

Machining and assemblage of passive door leaf bottom part. Exterior opening double door with basement. Without double casement profile

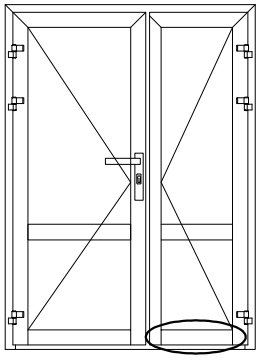

Installation plat of AYPC.W62.0951-03 elements on AYPC.W62.0204E profile

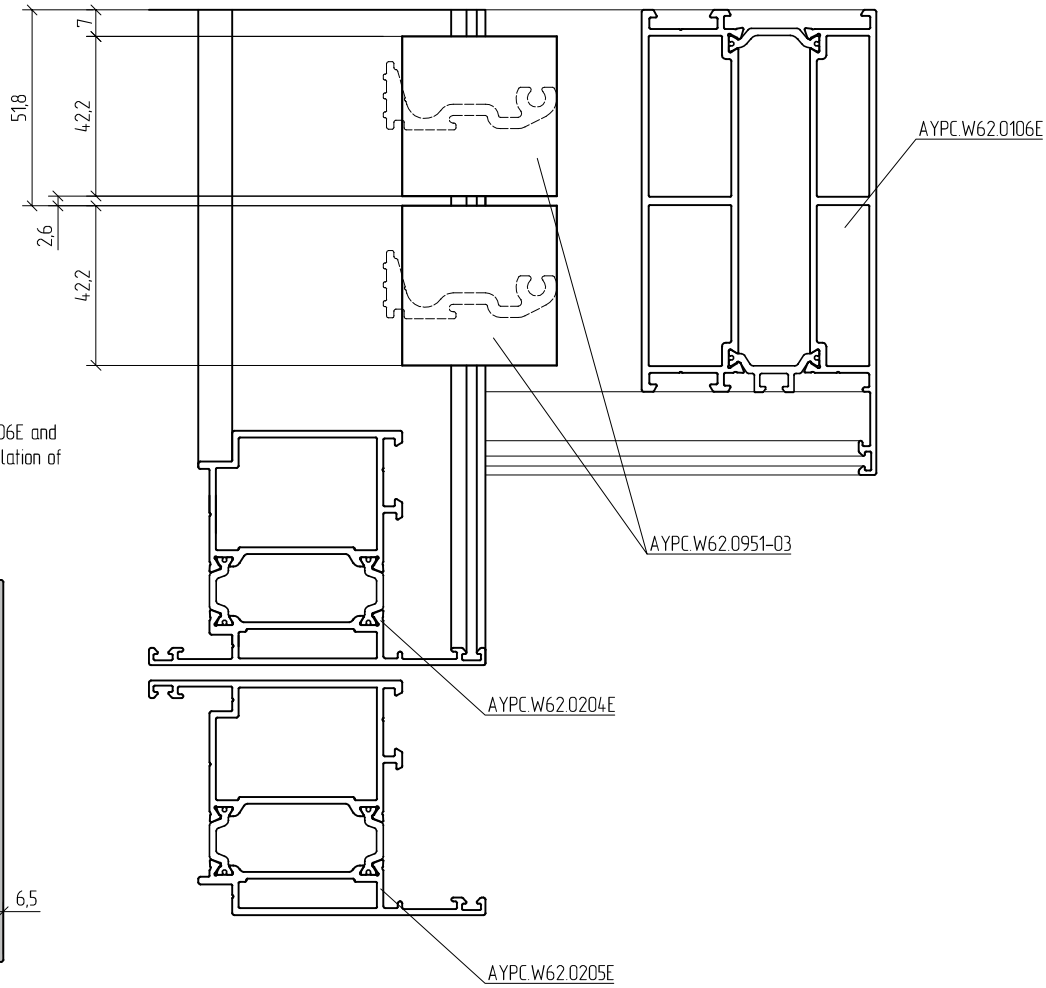

Machining of AYPC.W62.0106E and AYPC.W62.0803E for installation of 3,9x13-A2 DIN7981

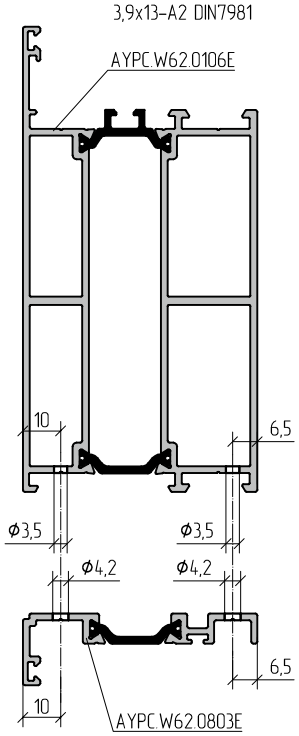

Installation plan of AYPC.W62.0803E.

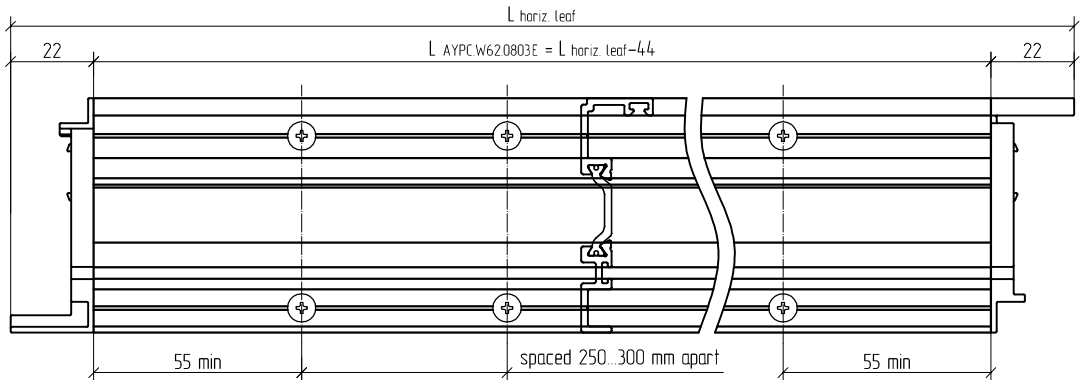

Machining and assemblage of passive door leaf bottom part. Exterior opening double casement door

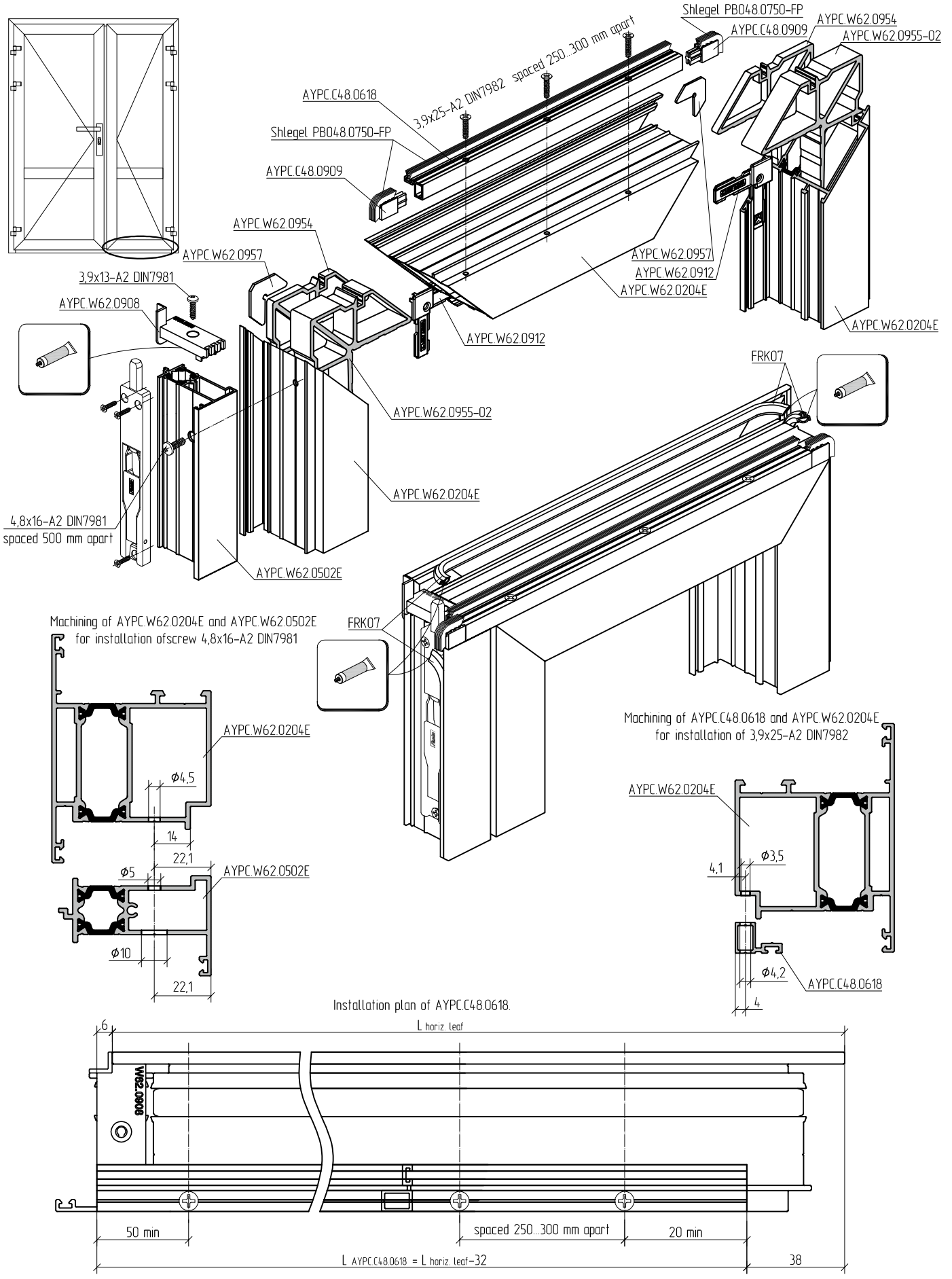

Machining and assemblage of passive door leaf bottom part. Exterior opening double casement door with basement

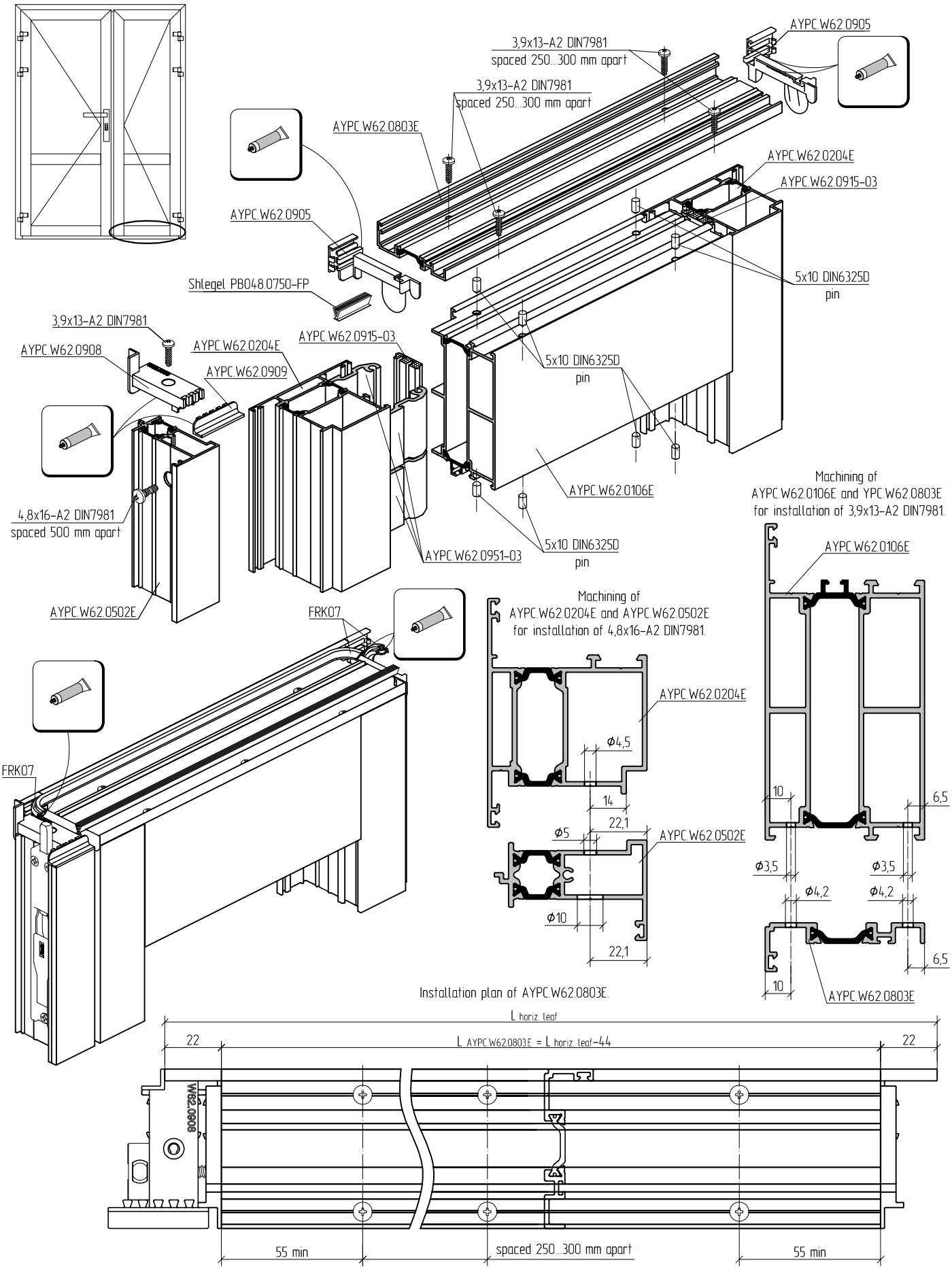

Door leaf bottom part machining and assemblage. Interior opening single and double door

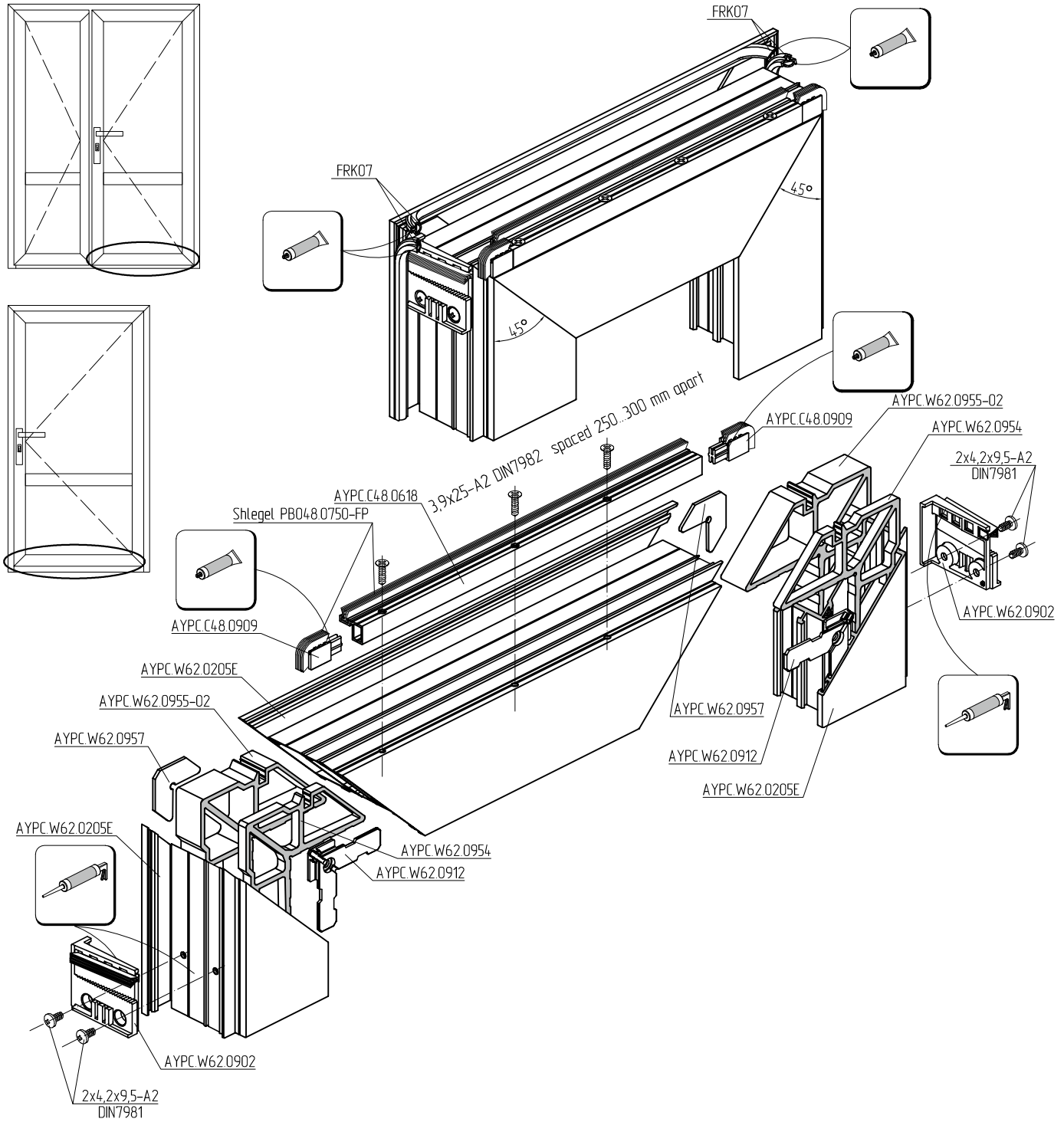

Installation plan of AYPC.C48.0618.

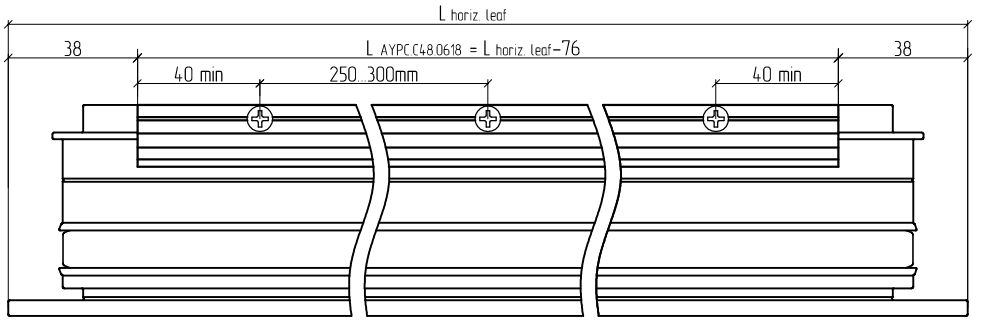

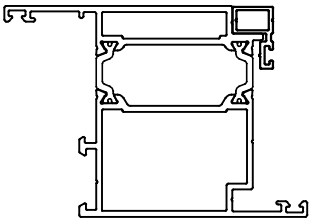

Door leaf bottom part machining and assemblage. Interior opening single and double door

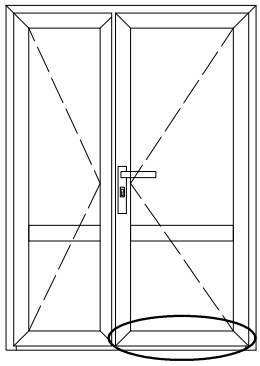

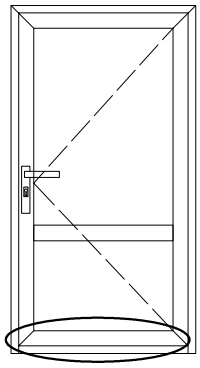

Double door

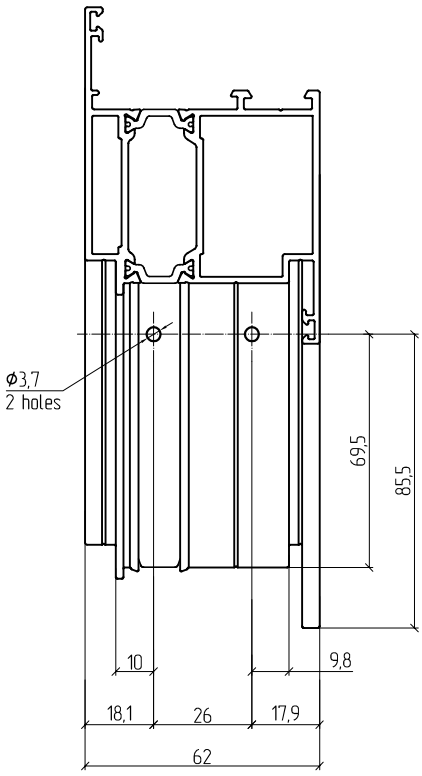

Single door

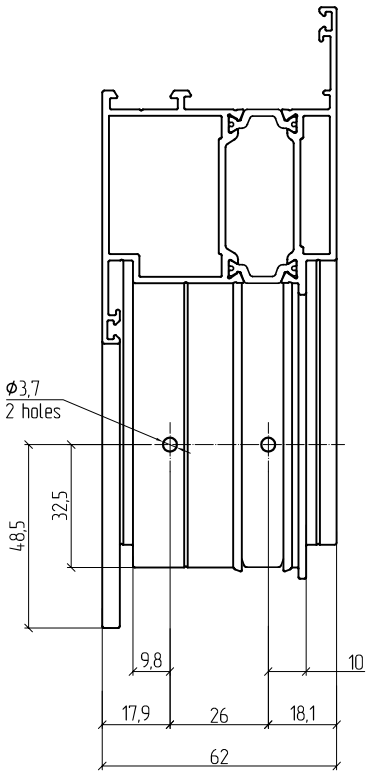

Machining of AYPC.C48.0618 and AYPC.W62.0205E
for installation of 3,9x25-A2 DIN7982.

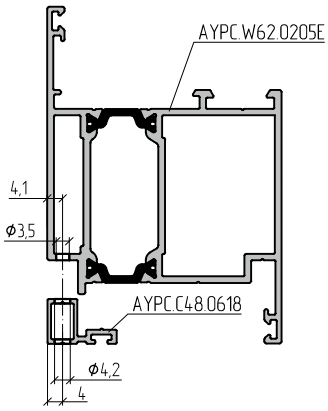

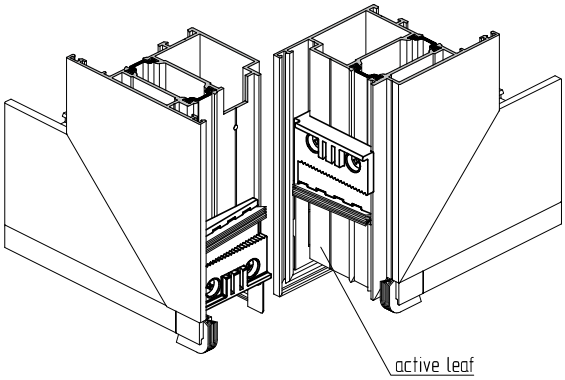

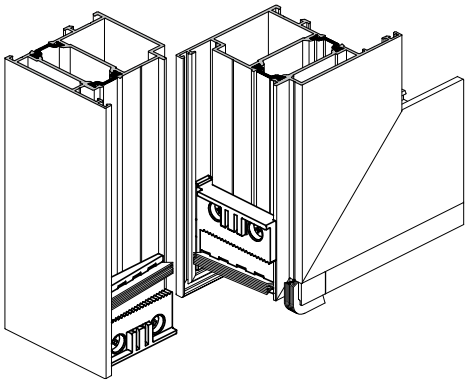

Machining and assemblage of passive door leaf bottom part. Interior opening double door

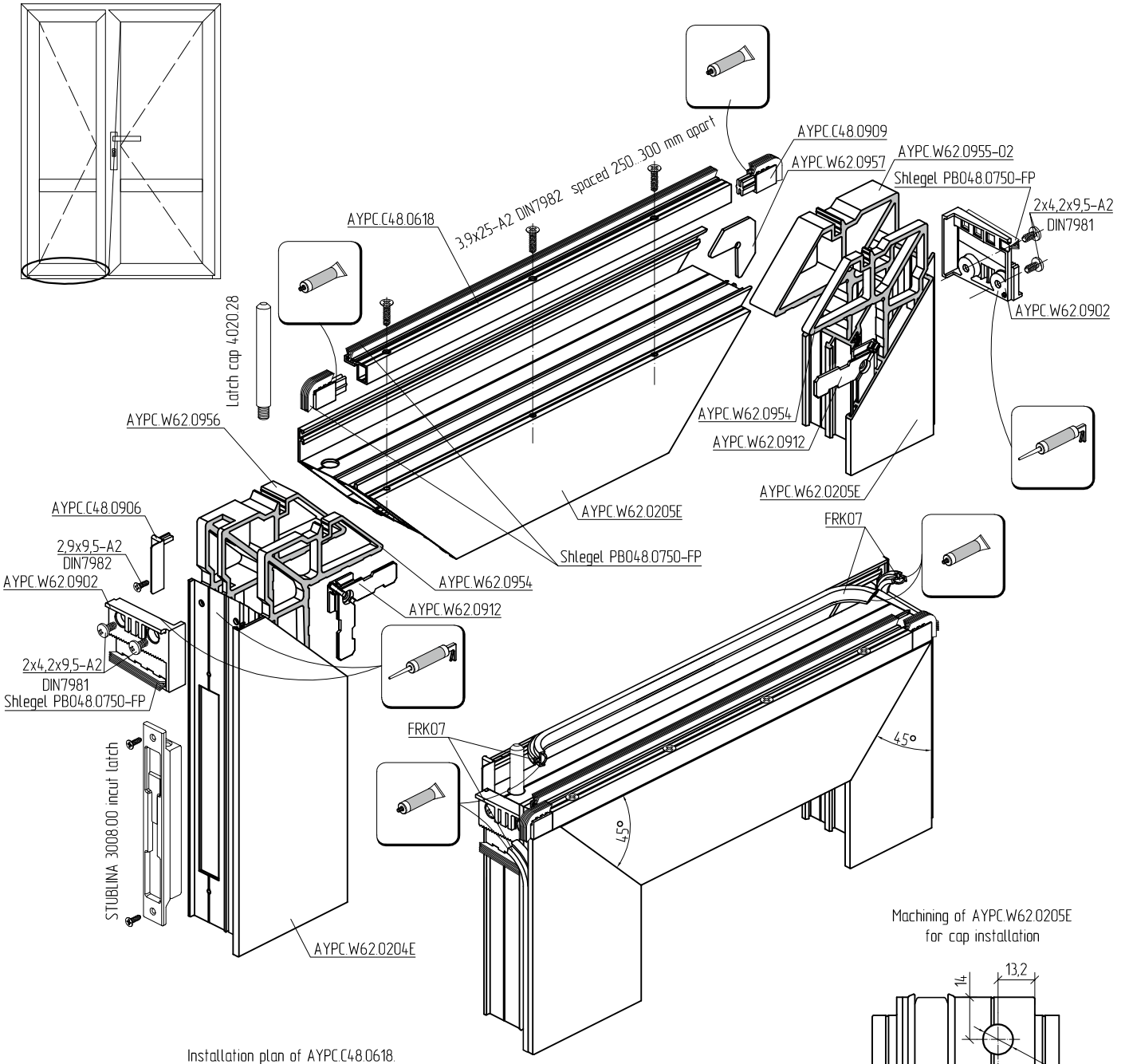

Installation plan of AYPC.C48.0618.

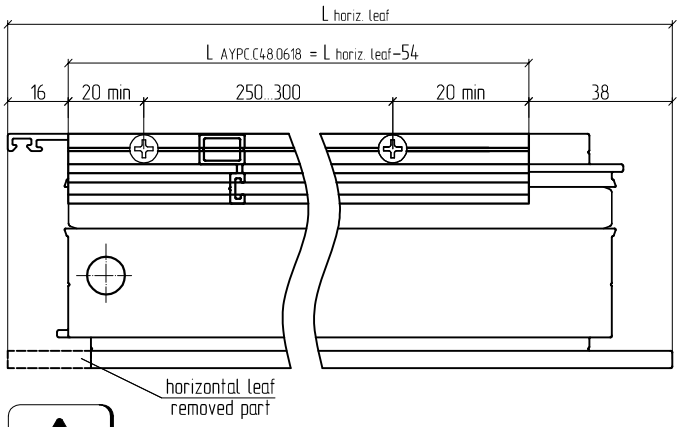

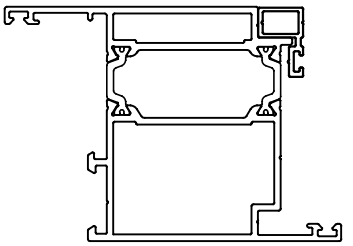

Machining of AYPC.W62.0205E
for cap installation

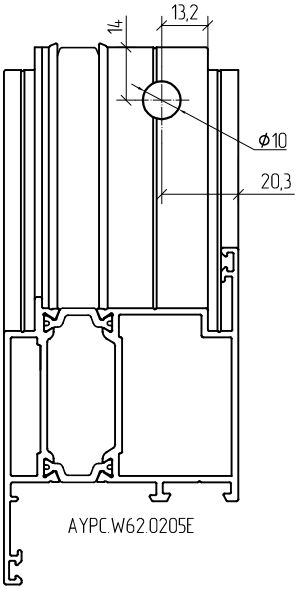

Machining of AYPC.W62.0204E and AYPC.W62.0205E profiles is to be done after cutting.

Assemblage of exterior opening double door passive leaf upper part. Without double casement profile

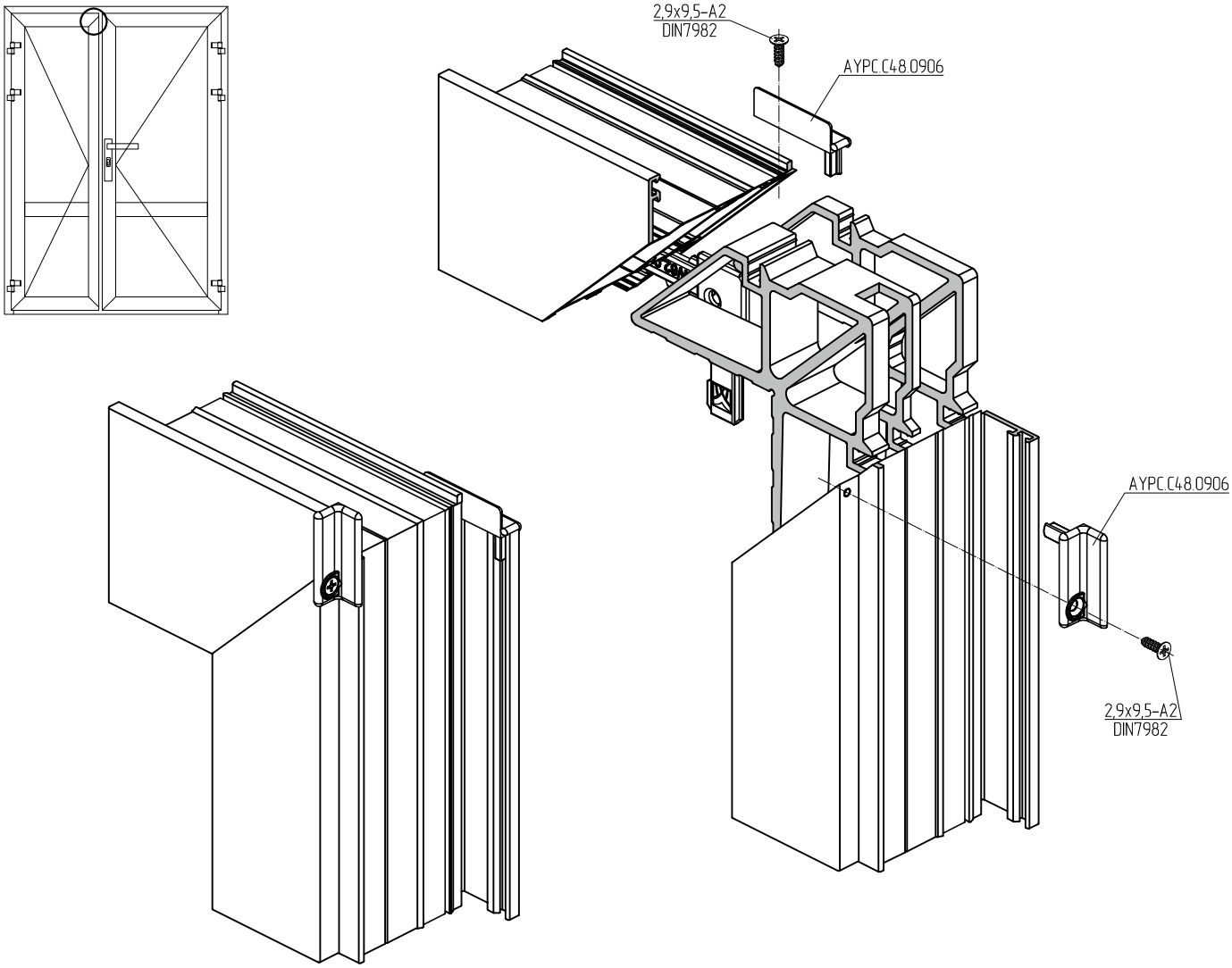

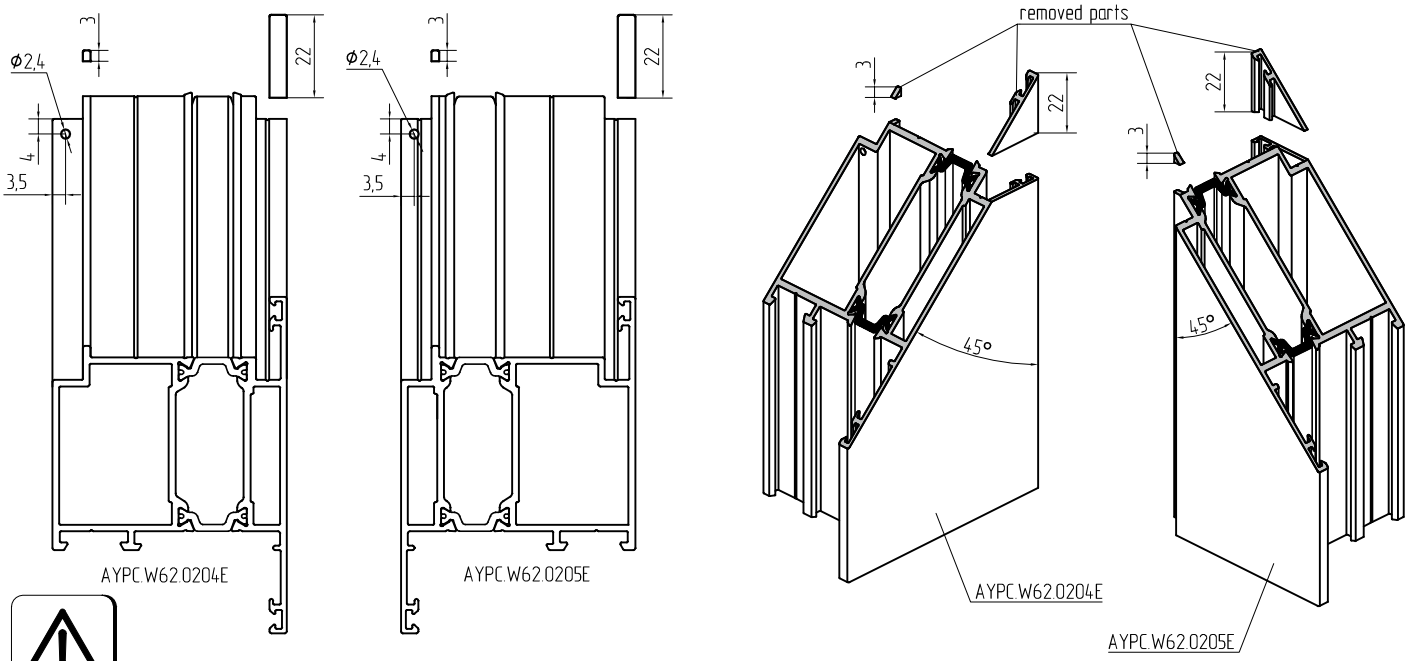

Machining of AYPC.W62.0204E and AYPC.W62.0205E profiles is to be done after cutting.

Machining and assemblage of passive leaf upper part profiles. Exterior opening double casement door

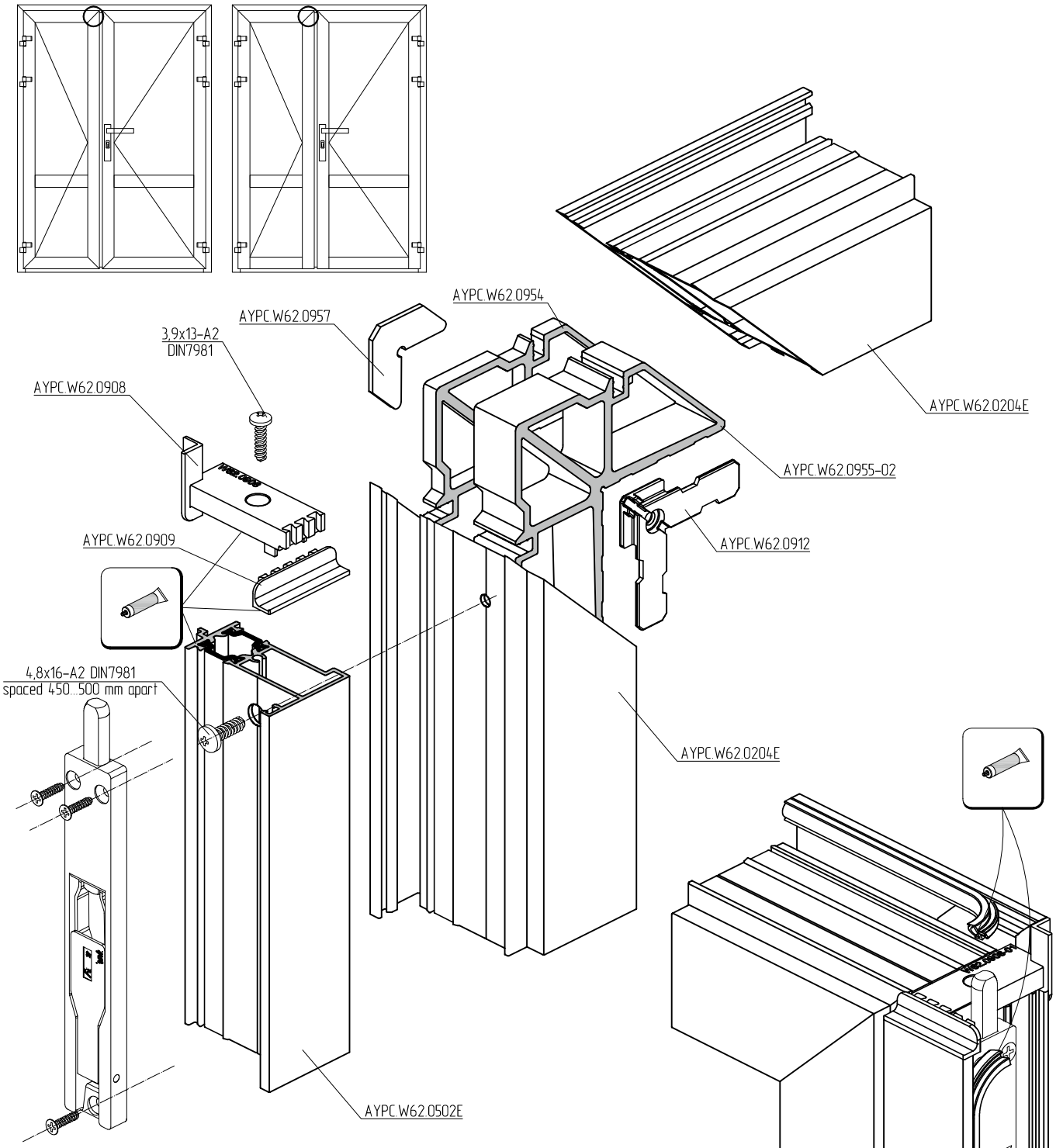

Machining of AYPC.W62.0204E and AYPC.W62.0502E
for installation of 4,8x16-A2 DIN7981

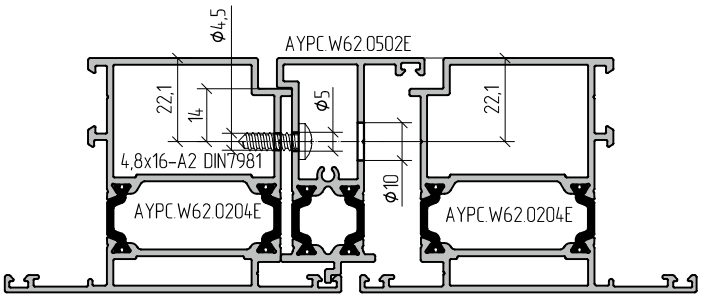

Machining and assemblage of passive leaf upper part profiles. Interior opening double door

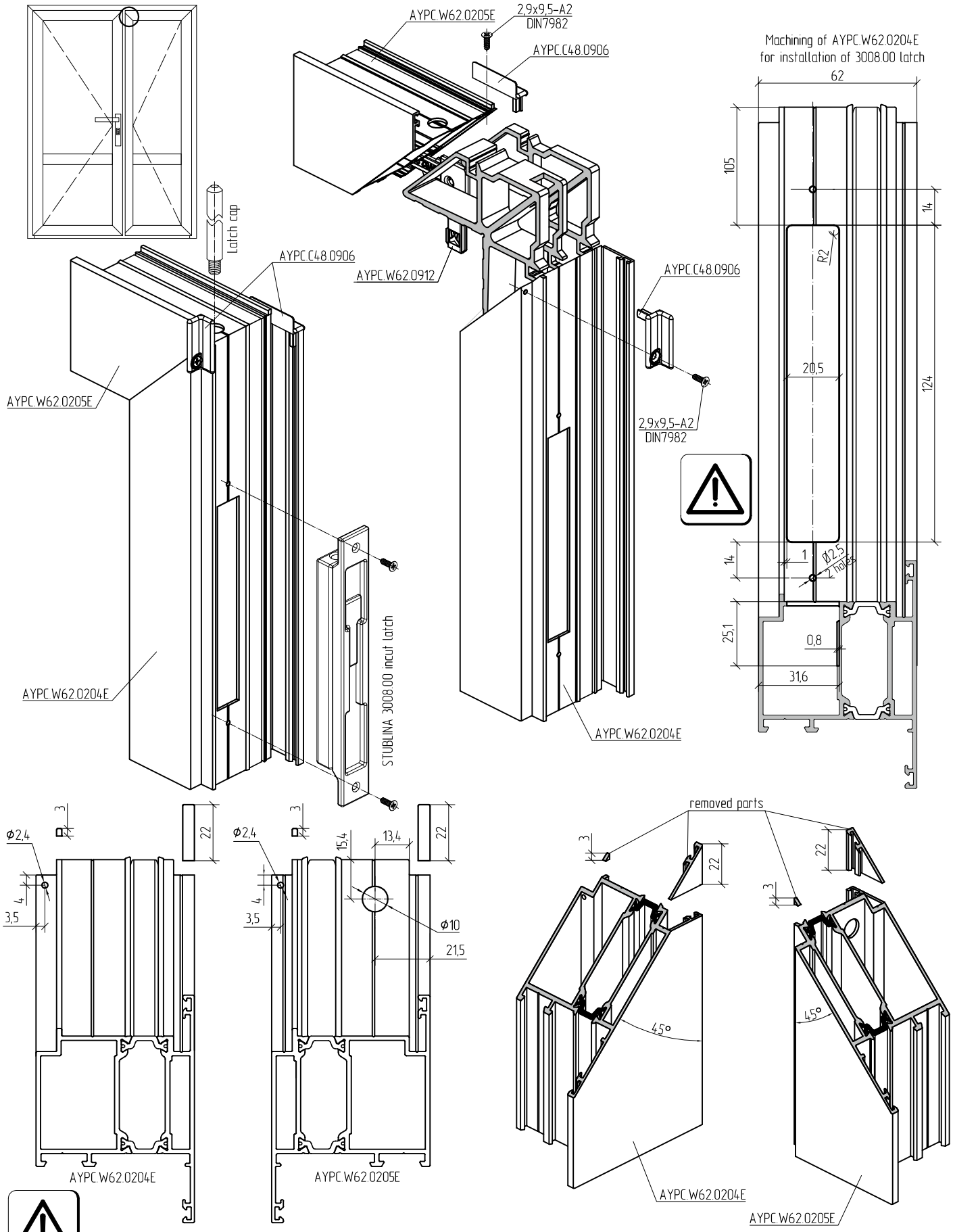

Machining of AYPC.W62.0204E and AYPC.W62.0205E profiles is to be done after cutting.

Installation of AYPC.C48.0906 and AYPC.C48.0907 plugs on double doors

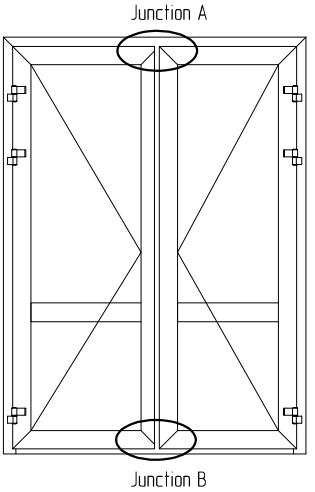

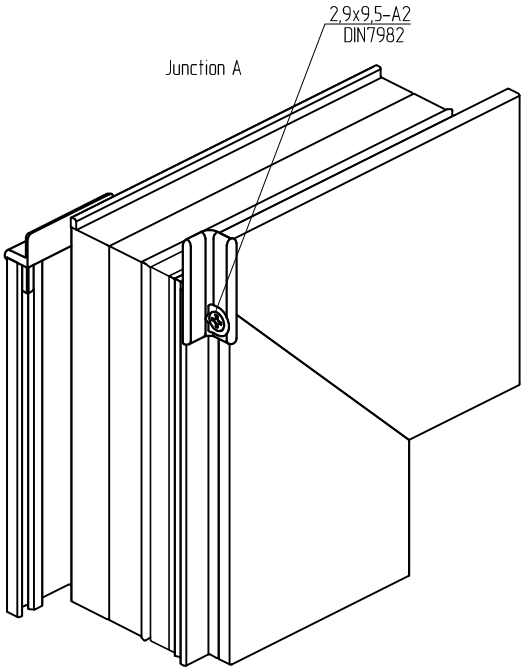

Double door type	AYPC.C48.0906		AYPC.C48.0907	
	upper part, pcs	bottom part, pcs	upper part, pcs	bottom part, pcs
extrior with threshold with basement right	2	–	–	–
extrior with threshold with basement left	–	–	2	–
extrior with threshold right	2	–	–	1
extrior with threshold left	–	1	2	–

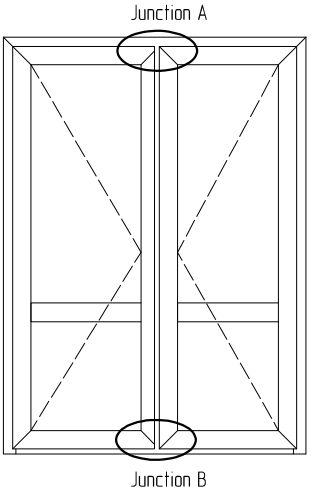

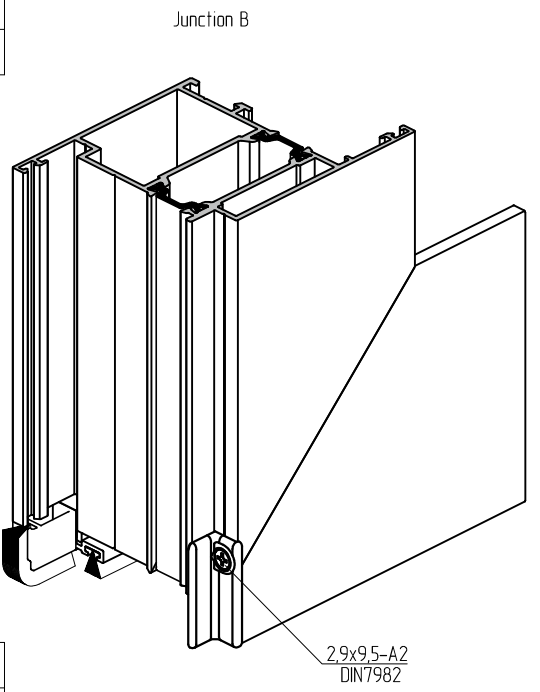

Double door type	AYPC.C48.0906		AYPC.C48.0907	
	upper part, pcs	bottom part, pcs	upper part, pcs	bottom part, pcs
interior with threshold with basement right	–	–	2	–
interior with threshold with basement left	2	–	–	–
interior with threshold right	–	1	2	–
interior with threshold left	2	–	–	1

Machining and assemblage of double window with AYPC.W62.0501E double casement profile.

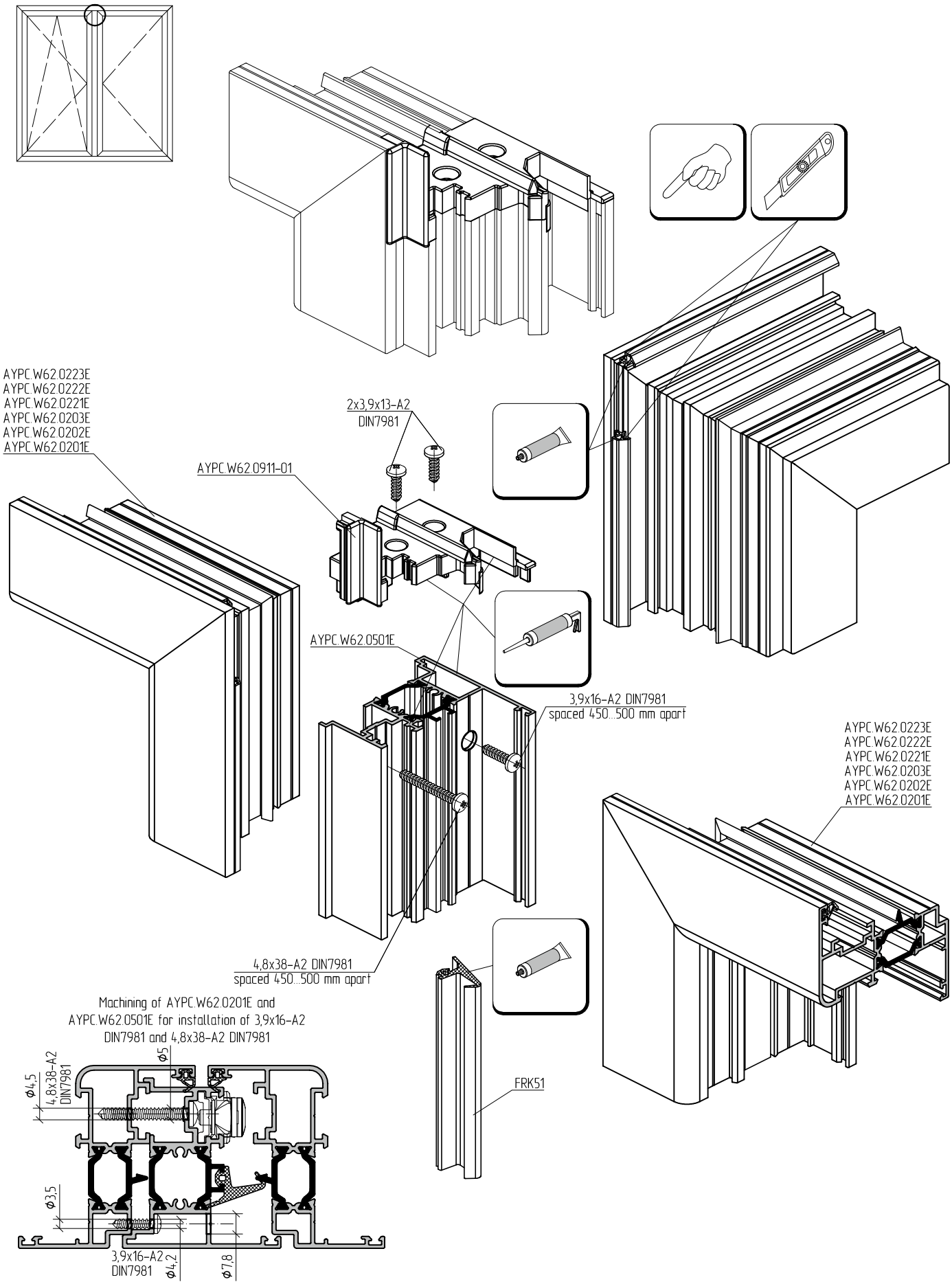

Machining and assemblage of double window with AYPC.W62.0501E double casement profile.

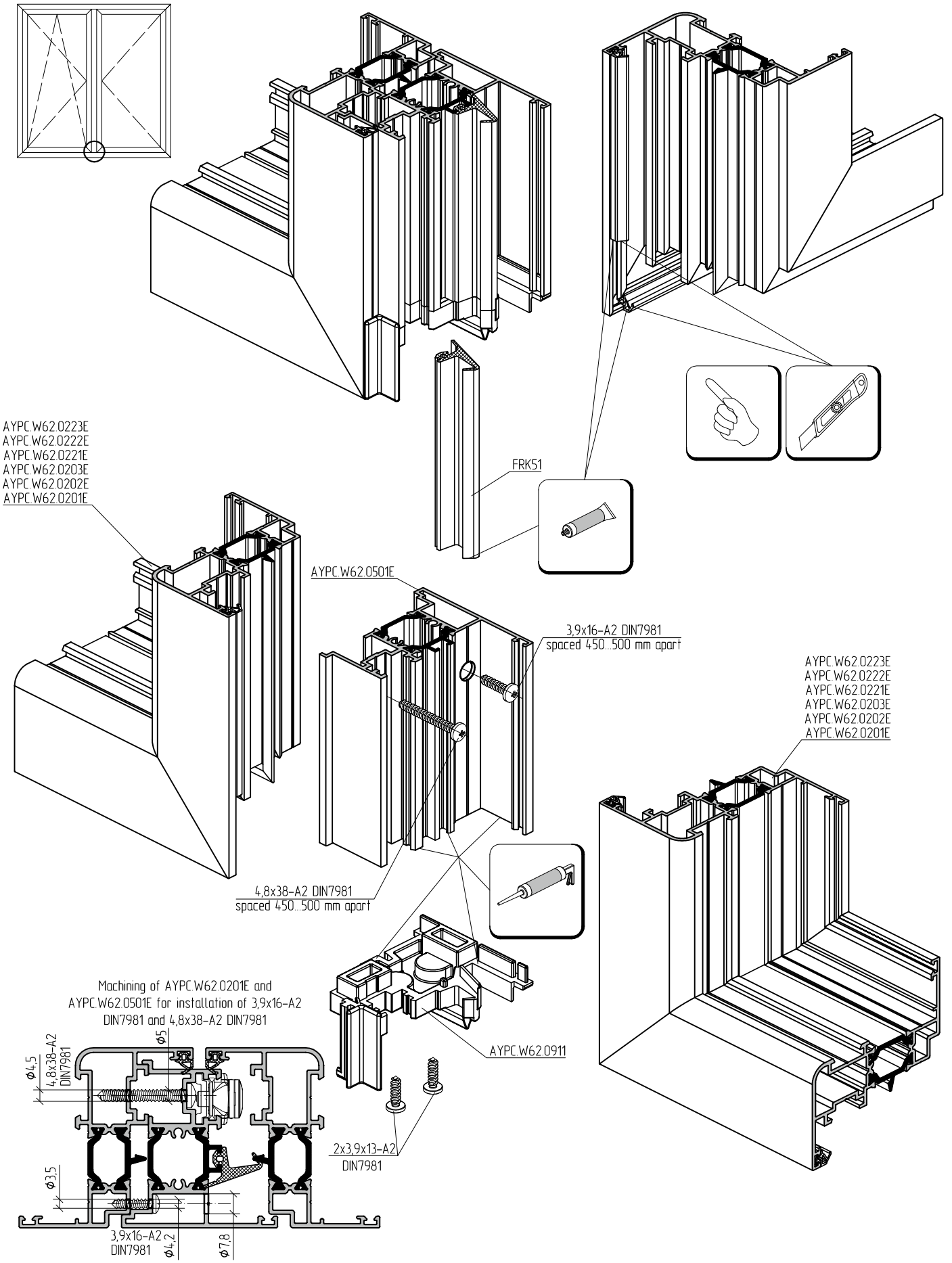

Machining and assemblage of profiles of entry with exterior opening door.
AYPC.W62.0805E profile fastening to the frame

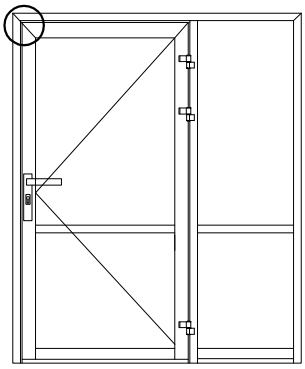

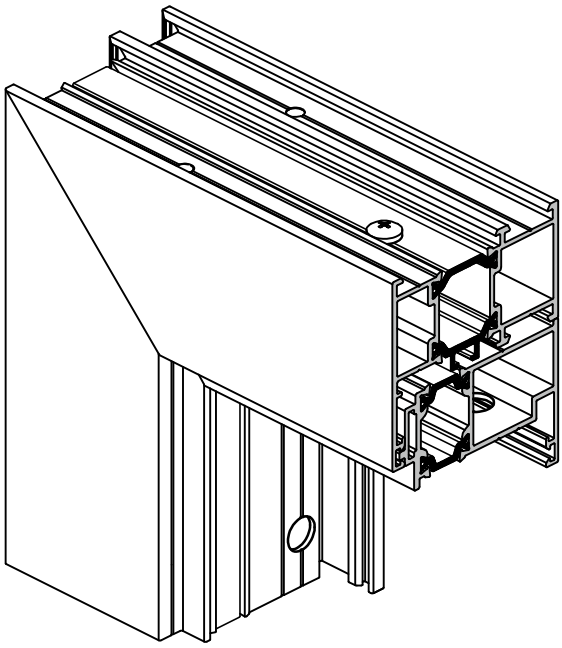

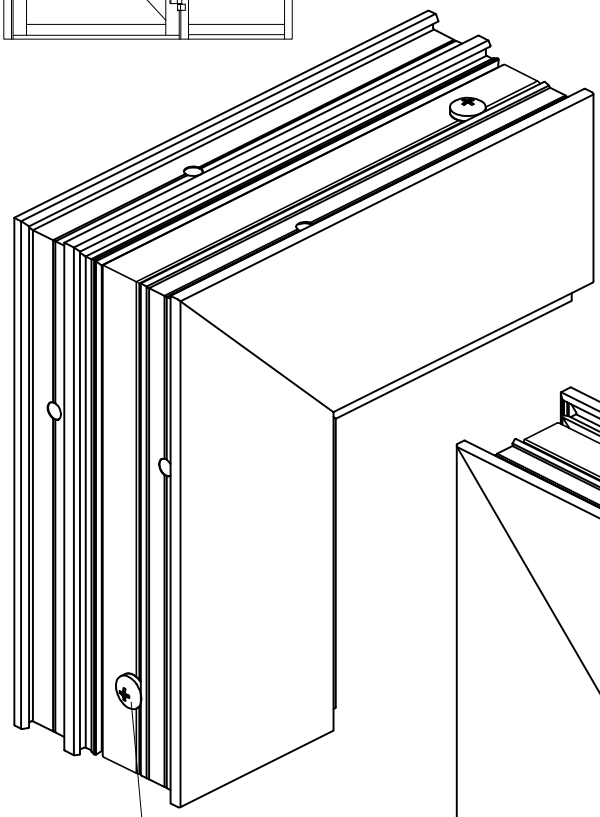

spaced 450...500 mm apart
4,8x38-A2 DIN7981 - AYPC.W62.0101E
4,8x45-A2 DIN7981 - AYPC.W62.0102E
4,8x60-A2 DIN7981 - AYPC.W62.0103E

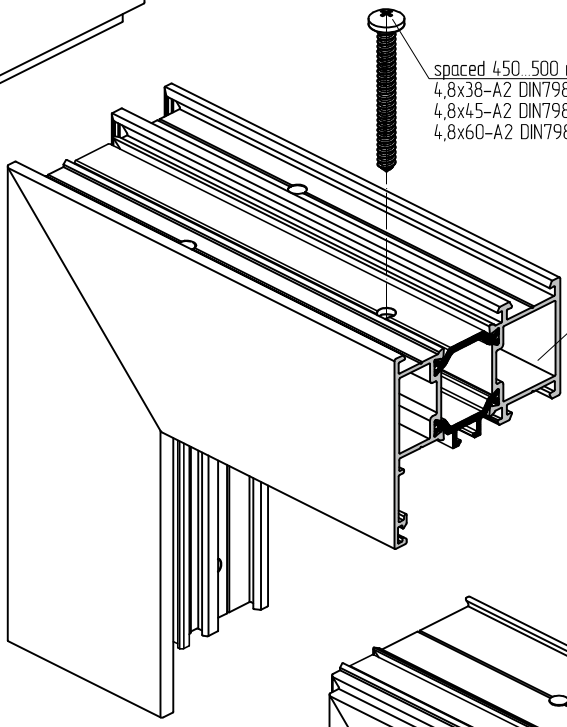

AYPC.W62.0103E
AYPC.W62.0102E
AYPC.W62.0101E

spaced 450...500 mm apart
4,8x38-A2 DIN7981 - AYPC.W62.0101E
4,8x45-A2 DIN7981 - AYPC.W62.0102E
4,8x60-A2 DIN7981 - AYPC.W62.0103E

Machining of AYPC.W62.0102E and
AYPC.W62.0805E for installation of
4,8x16-A2 DIN7981 and 4,8x45-A2 DIN7981

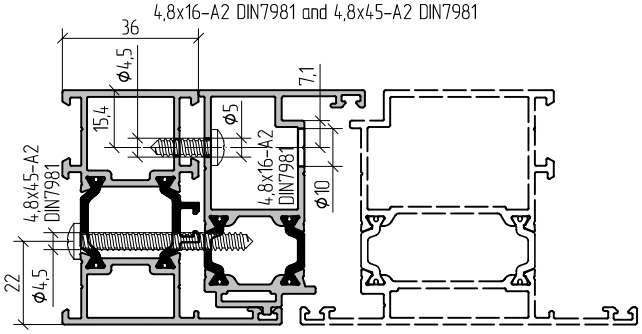

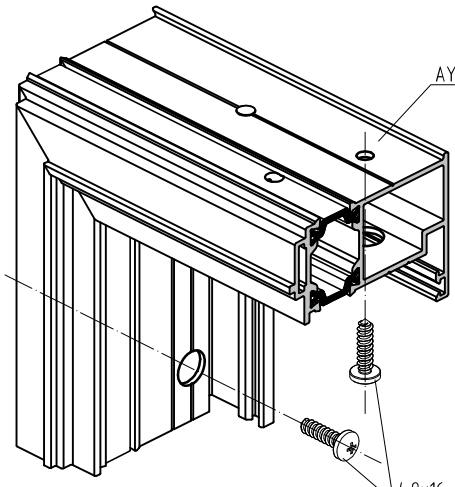

AYPC.W62.0805E

4,8x16-A2 DIN7981
spaced 450...500 mm apart

AYPC.W62.0101E and AYPC.W62.0301E profiles are not used for face mounted hinges.

Machining and assemblage of profiles of entry with exterior opening single door

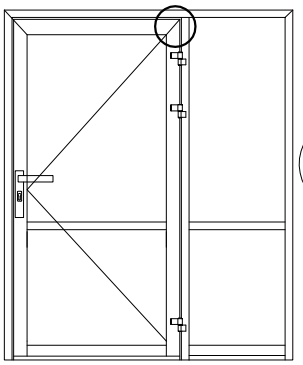

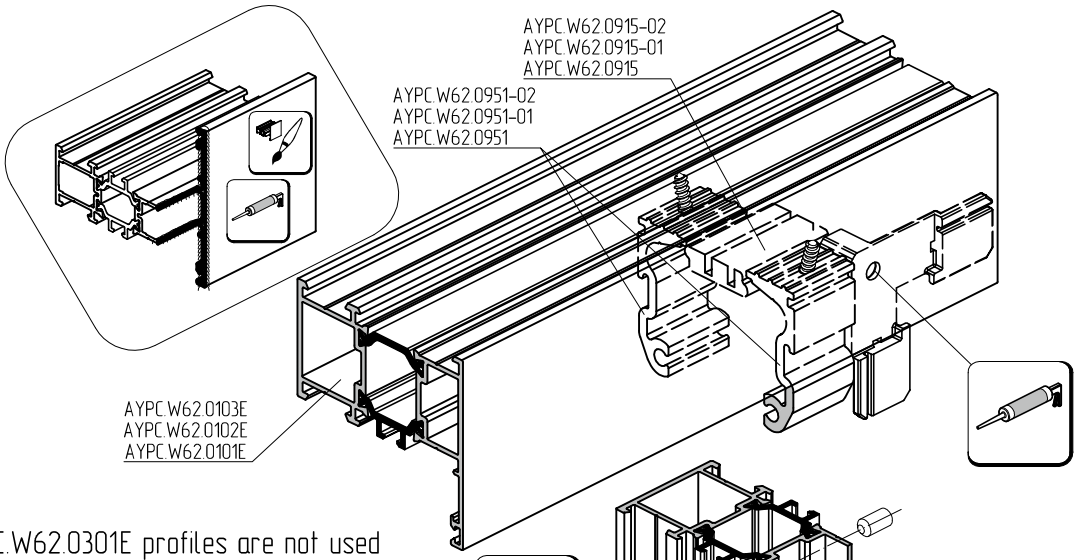

AYPC.W62.0101E and AYPC.W62.0301E profiles are not used for face mounted hinges..

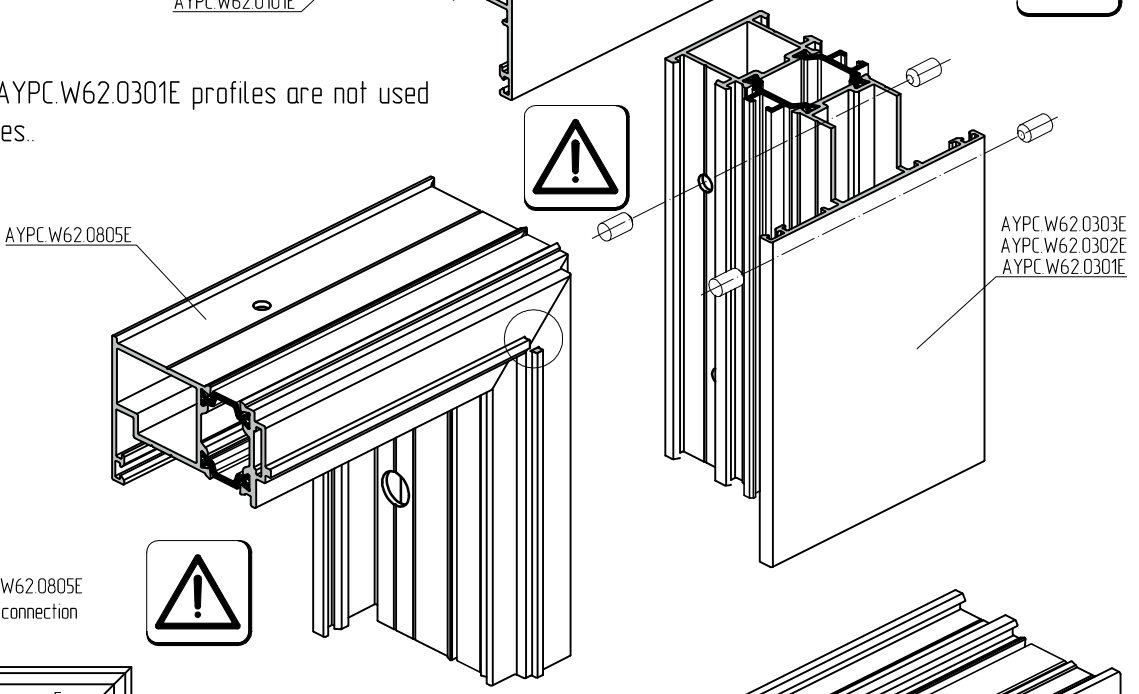

Machining of AYPC.W62.0805E for transom bars connection

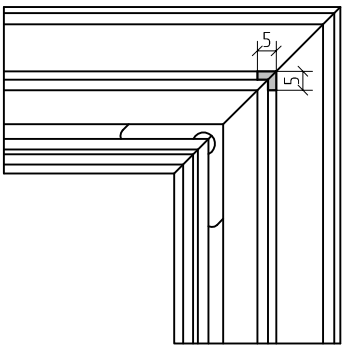

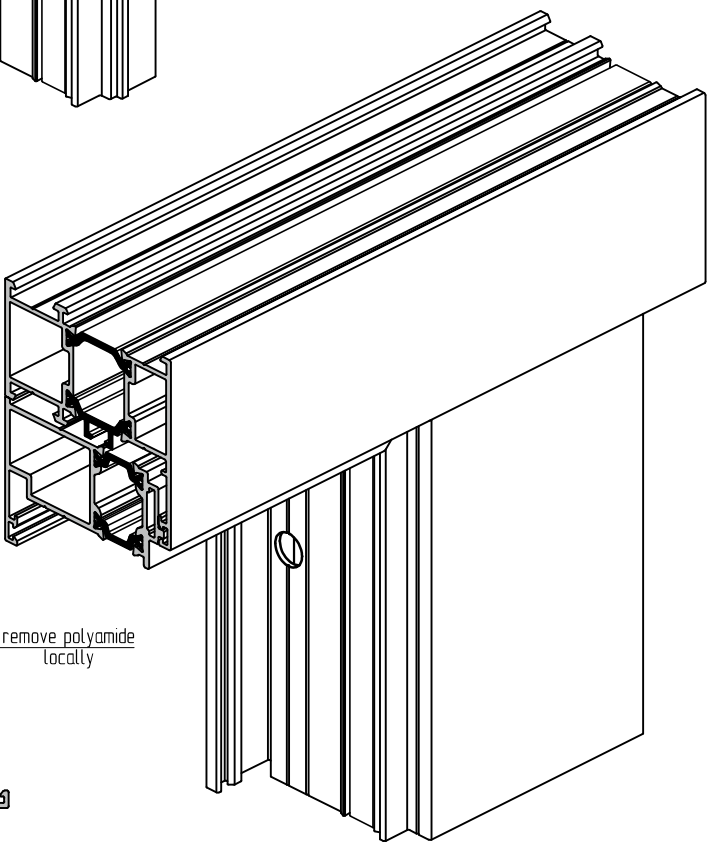

Machining of AYPC.W62.0302E and AYPC.W62.0805E for installation of 4,8x16-A2 DIN7981 and 4,8x45-A2 DIN7981

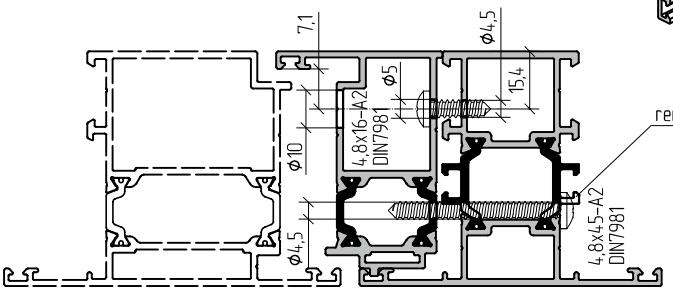

Machining and assemblage of profiles of exterior opening single door with upper fixed part.

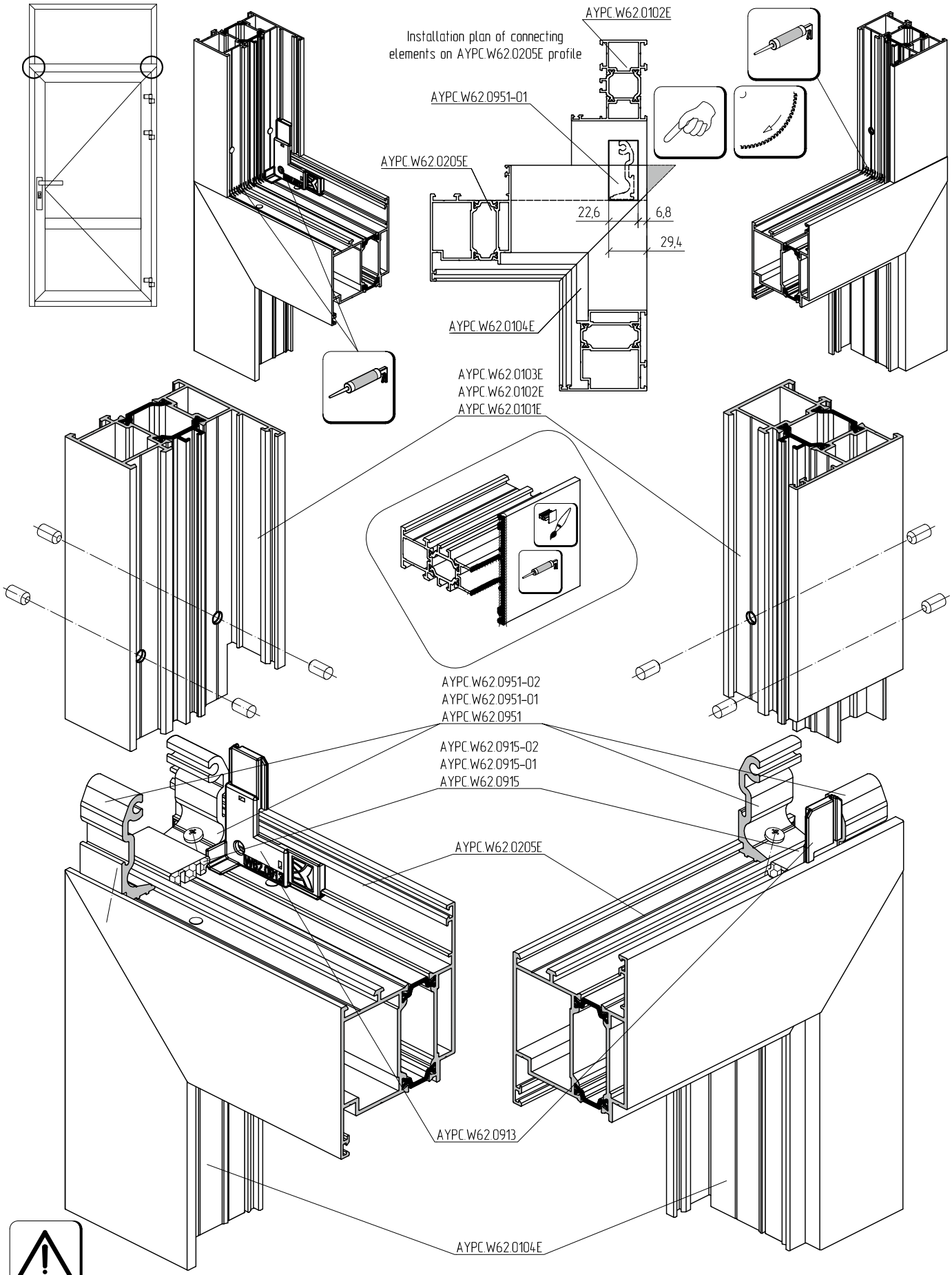

Machining of AYPC.W62.0205E horizontal profile is to be done after cutting.

T-connection of profiles

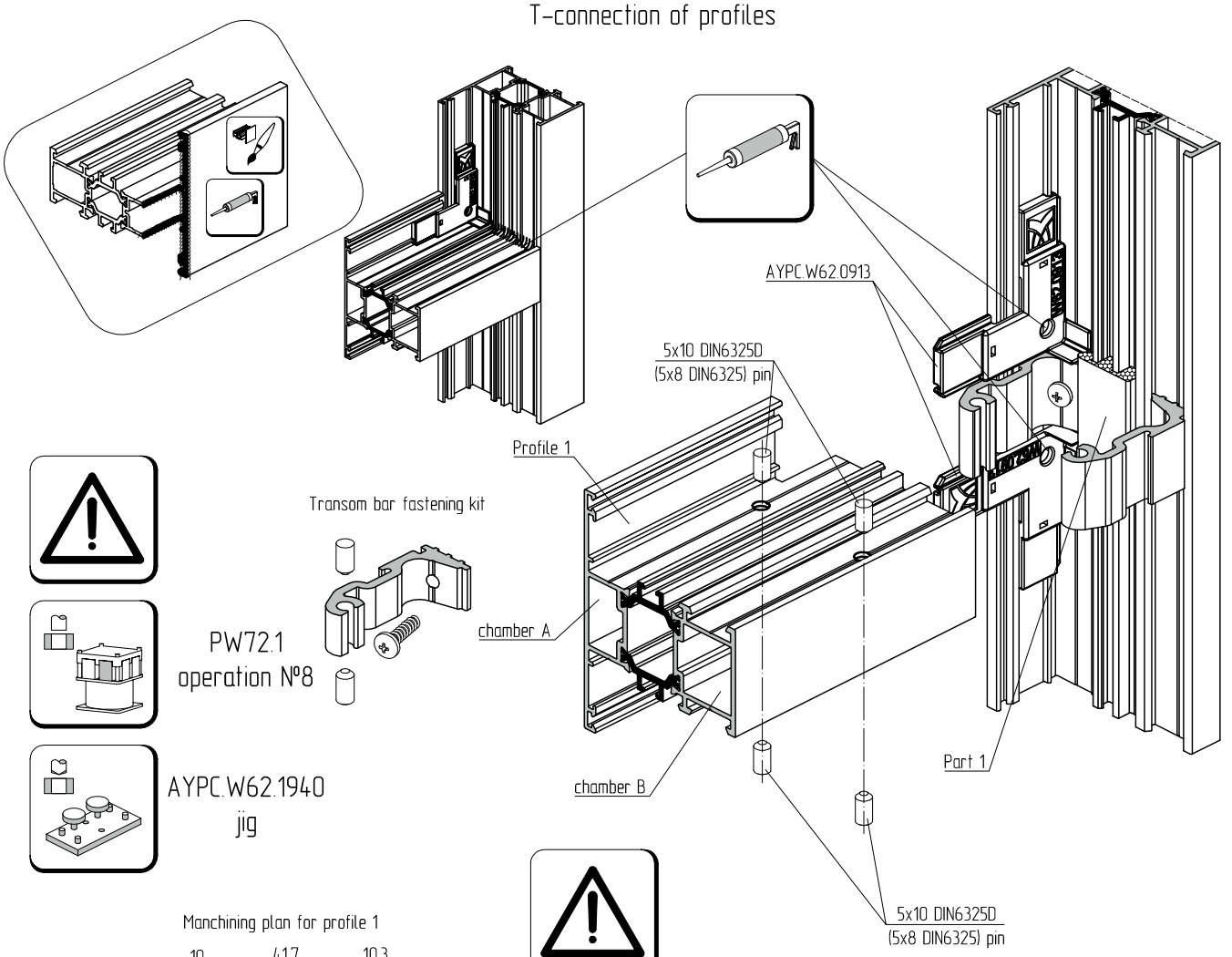

PW72.1
operation №8

AYPC.W62.1940
jig

Apply silicone sealant on joint surface.
Sealant composition recommendations on request.

Manchining plan for profile 1

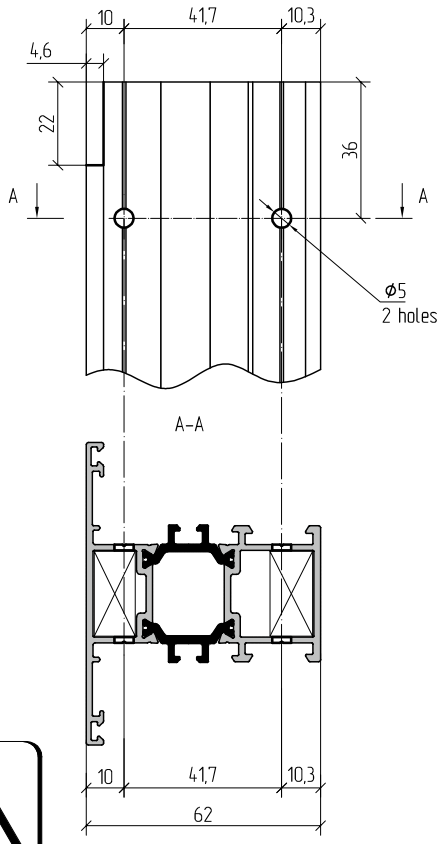

Profile 1	Transom fixing element		Qty	Part 1	Qty
	chamber A	chamber B			
AYPC.W62.0101E	AYPC.W62.0951	AYPC.W62.0951	2	AYPC.W62.0915	1
AYPC.W62.0102E	AYPC.W62.0951-01	AYPC.W62.0951-01	2	AYPC.W62.015-01	1
AYPC.W62.0103E	AYPC.W62.0951-02	AYPC.W62.0951-02	2	AYPC.W62.0915-02	1
AYPC.W62.0106E	AYPC.W62.0951-03	AYPC.W62.0951-03	4	AYPC.W62.0915-03	1
AYPC.W62.0107E	AYPC.W62.0951-01	AYPC.W62.0951-01	2	AYPC.W62.0915-01	1
AYPC.W62.0121E	AYPC.W62.0951	AYPC.W62.0951	2	AYPC.W62.0915	1
AYPC.W62.0122E	AYPC.W62.0951-01	AYPC.W62.0951-01	2	AYPC.W62.0915-01	1
AYPC.W62.0123E	AYPC.W62.0951-02	AYPC.W62.0951-02	2	AYPC.W62.0915-02	1
AYPC.W62.0301E	AYPC.W62.0951	AYPC.W62.0951	2	AYPC.W62.0915	1
AYPC.W62.0302E	AYPC.W62.0951-01	AYPC.W62.0951-01	2	AYPC.W62.0915-01	1
AYPC.W62.0303E	AYPC.W62.0951-02	AYPC.W62.0951-02	2	AYPC.W62.0915-02	1
AYPC.W62.0304E	AYPC.W62.0951-01	AYPC.W62.0951-01	2	AYPC.W62.0915-01	1
AYPC.W62.0305E	AYPC.W62.0951-01	AYPC.W62.0951-01	2	AYPC.W62.0915-01	1
AYPC.W62.0306E	AYPC.W62.0951	AYPC.W62.0951	2	AYPC.W62.0915	1
AYPC.W62.0307E	AYPC.W62.0951-01	AYPC.W62.0951-01	2	AYPC.W62.0915-01	1
AYPC.W62.0308E	AYPC.W62.0951-01	AYPC.W62.0951-01	2	AYPC.W62.0915-01	1

Use 5x8 DIN6325 pin while installing AYPC.W62.0101E and AYPC.W62.0301E profiles.

X-connection of profiles

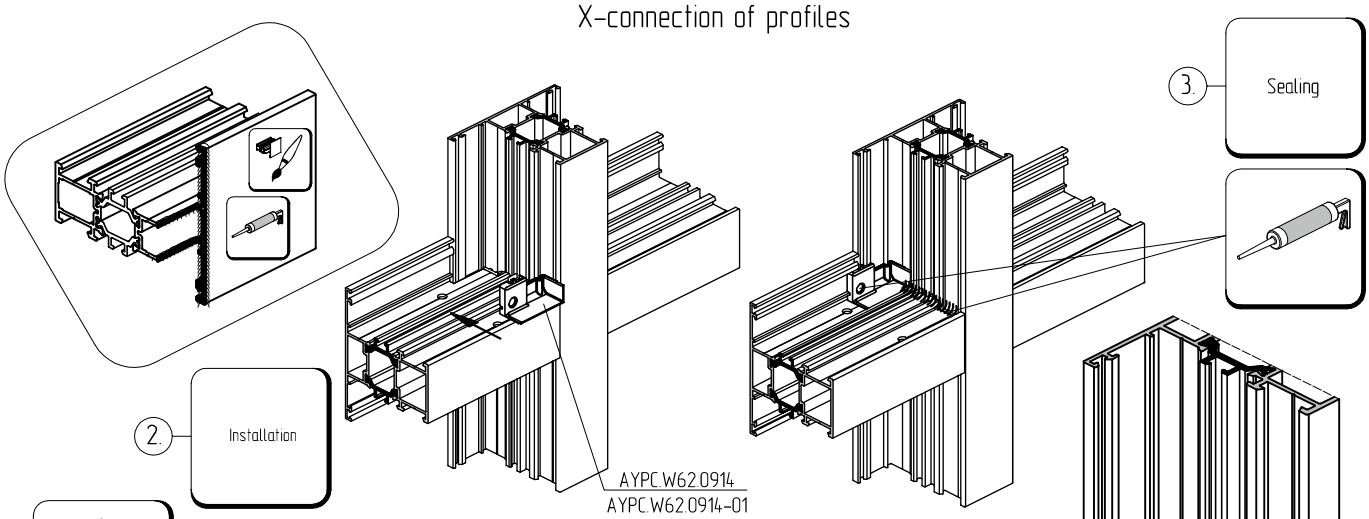

Apply silicone sealant on joint surface.
Sealant composition recommendations on request.

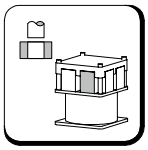

PW72.1
operation Nº8

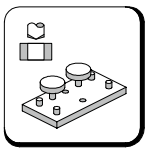

AYPC.W62.1940
jig

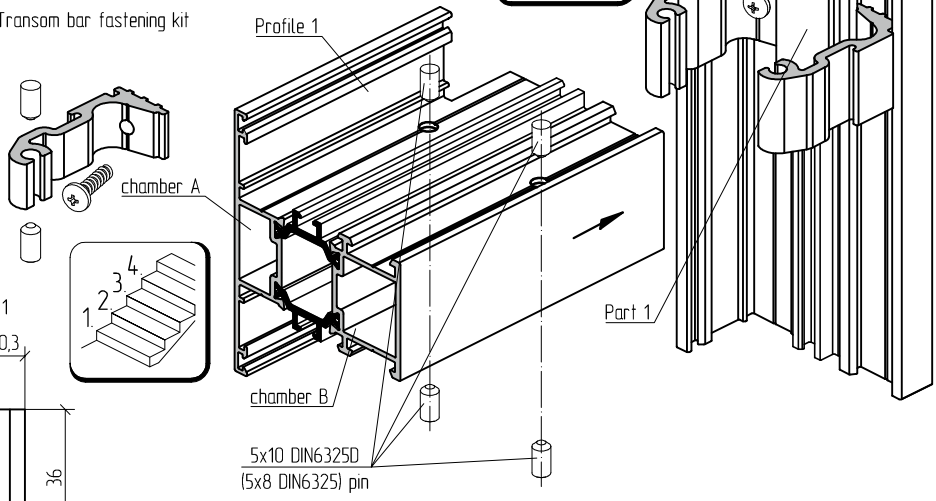

Manchining plan for profile 1

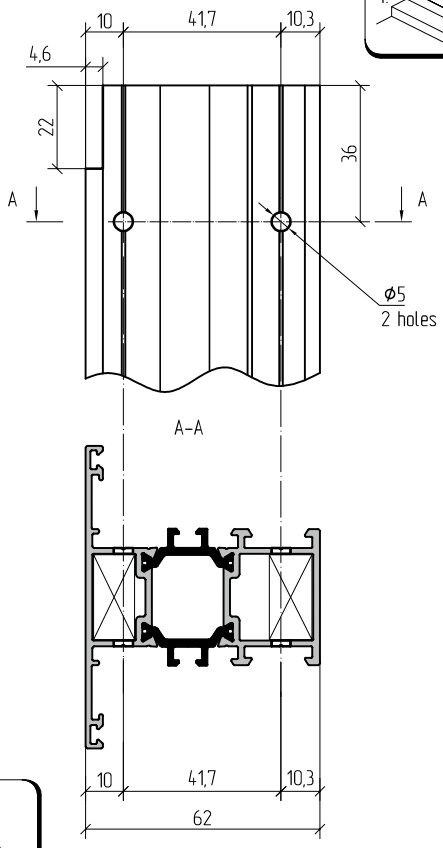

Profile 1	Transom fixing element		Qty	Part 1	Qty
	chamber A	chamber B			
AYPC.W62.0101E	AYPC.W62.0951	AYPC.W62.0951	2	AYPC.W62.0915	1
AYPC.W62.0102E	AYPC.W62.0951-01	AYPC.W62.0951-01	2	AYPC.W62.015-01	1
AYPC.W62.0103E	AYPC.W62.0951-02	AYPC.W62.0951-02	2	AYPC.W62.0915-02	1
AYPC.W62.0106E	AYPC.W62.0951-03	AYPC.W62.0951-03	4	AYPC.W62.0915-03	1
AYPC.W62.0107E	AYPC.W62.0951-01	AYPC.W62.0951-01	2	AYPC.W62.0915-01	1
AYPC.W62.0121E	AYPC.W62.0951	AYPC.W62.0951	2	AYPC.W62.0915	1
AYPC.W62.0122E	AYPC.W62.0951-01	AYPC.W62.0951-01	2	AYPC.W62.0915-01	1
AYPC.W62.0123E	AYPC.W62.0951-02	AYPC.W62.0951-02	2	AYPC.W62.0915-02	1
AYPC.W62.0301E	AYPC.W62.0951	AYPC.W62.0951	2	AYPC.W62.0915	1
AYPC.W62.0302E	AYPC.W62.0951-01	AYPC.W62.0951-01	2	AYPC.W62.0915-01	1
AYPC.W62.0303E	AYPC.W62.0951-02	AYPC.W62.0951-02	2	AYPC.W62.0915-02	1
AYPC.W62.0304E	AYPC.W62.0951-01	AYPC.W62.0951-01	2	AYPC.W62.0915-01	1
AYPC.W62.0305E	AYPC.W62.0951-01	AYPC.W62.0951-01	2	AYPC.W62.0915-01	1
AYPC.W62.0306E	AYPC.W62.0951	AYPC.W62.0951	2	AYPC.W62.0915	1
AYPC.W62.0307E	AYPC.W62.0951-01	AYPC.W62.0951-01	2	AYPC.W62.0915-01	1
AYPC.W62.0308E	AYPC.W62.0951-01	AYPC.W62.0951-01	2	AYPC.W62.0915-01	1

Use 5x8 DIN6325 pin while installing AYPC.W62.0101E and AYPC.W62.0301E profiles.
AYPC.W62.0914/-01 is to be installed after T-connection is made.

L-connection of profiles

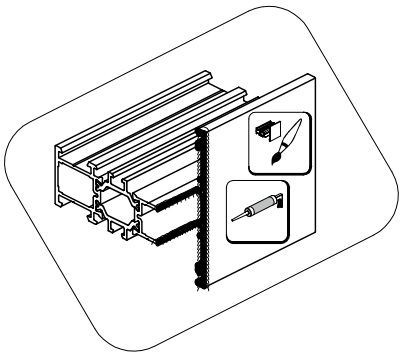

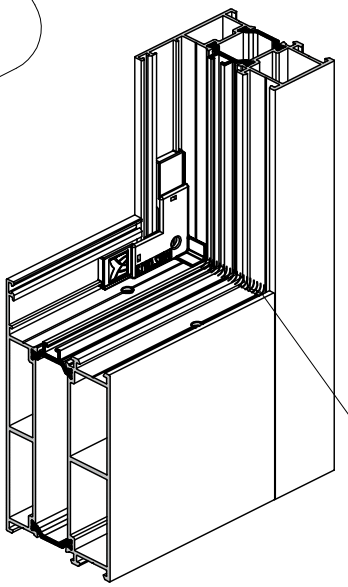

AYPC.W62.0951-03 transom bar fastening kit

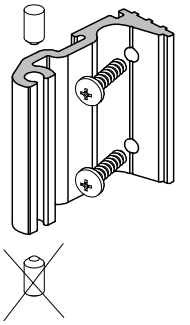

Apply silicone sealant on joint surface.
Sealant composition recommendations on request.

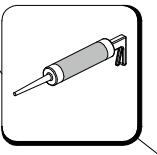

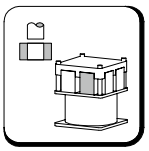

PW72.1
operation №8

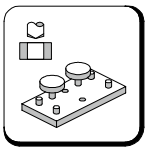

AYPC.W62.1940
jig

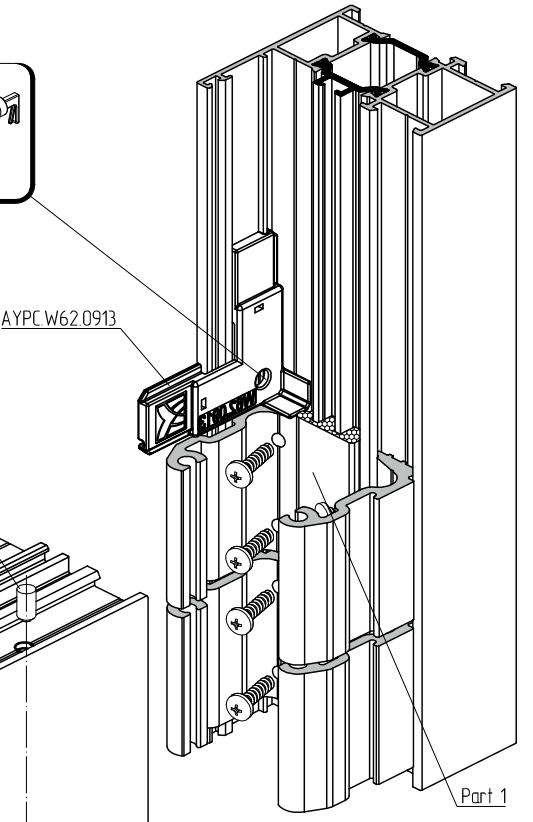

Manchining plan for profile 1

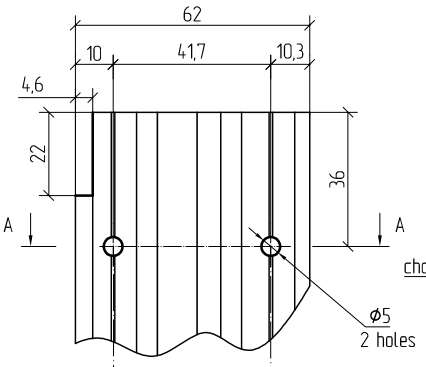

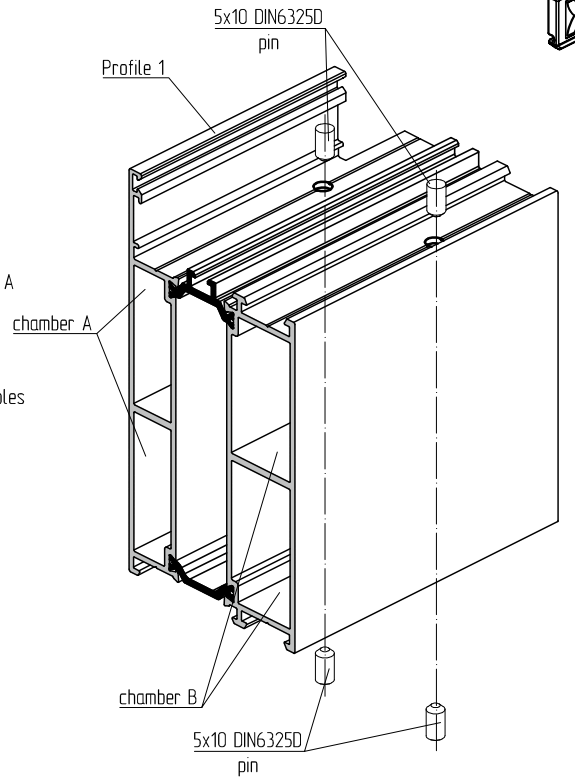

A-A

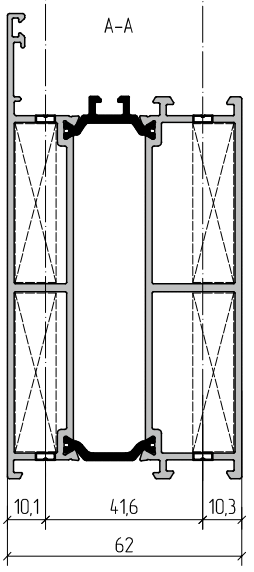

Profile 1	Transom fixing element		Qty	Part 1	Qty
	chamber A	chamber B			
AYPC.W62.0106E	AYPC.W62.0951-03	AYPC.W62.0951-03	4	AYPC.W62.0915-03	1

Just one 5x10 DIN6325 pin from the kit AYPC.W62.951-03 is used.

T connection of profiles

Transom bar fastening kit

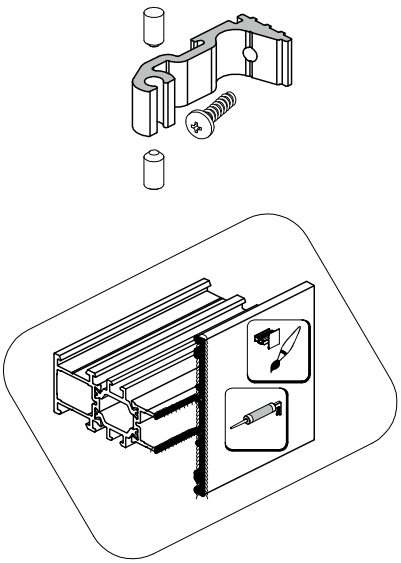

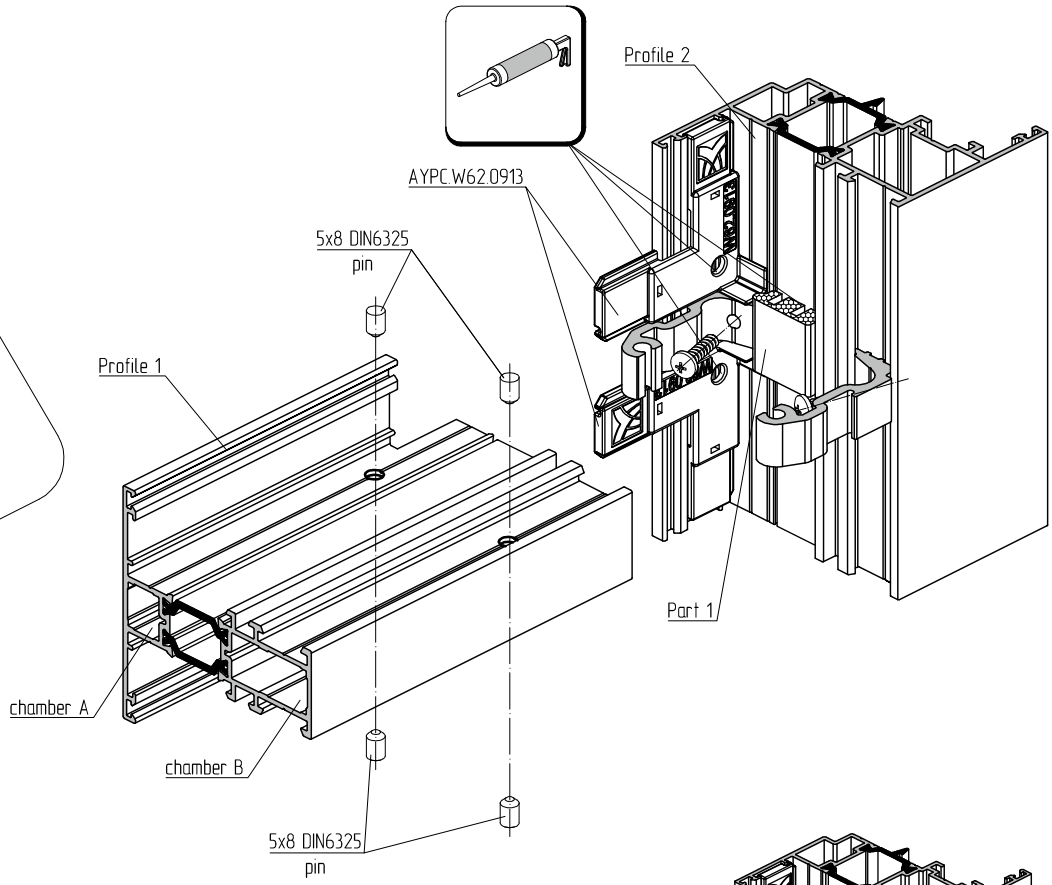

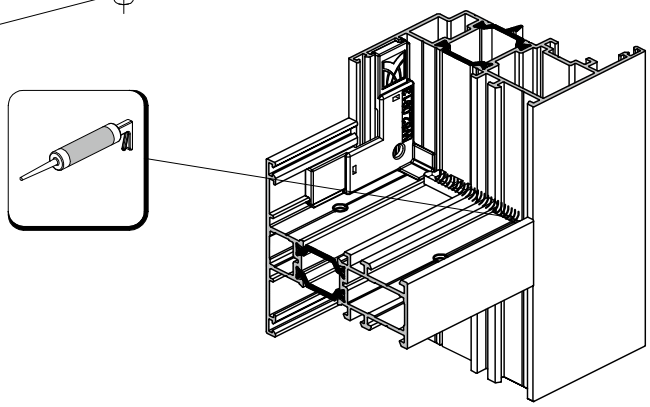

Manchining plan for profile 1

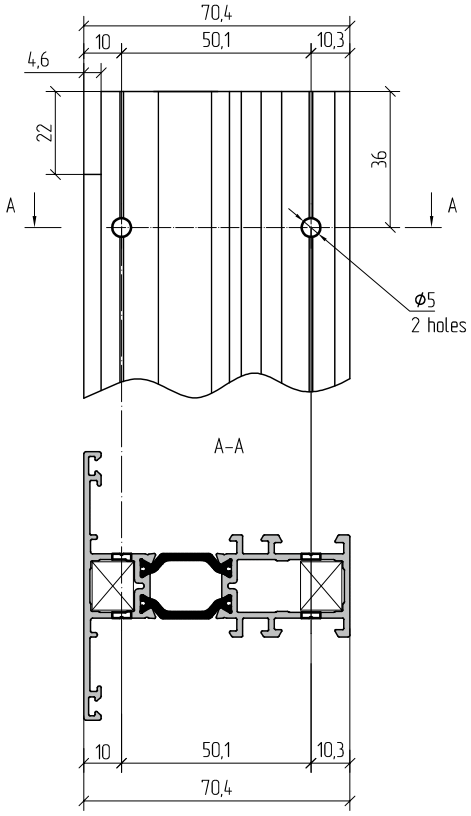

Profile 1	Profile 2	Transom fixing element		Qty	Part 1	Qty
		chamber A	chamber B			
AYPC.W62.0321E	AYPC.W62.0221E	AYPC.W62.0951	AYPC.W62.0951	2	AYPC.W62.0915	1
	AYPC.W62.0222E					
	AYPC.W62.0223E					

Apply silicone sealant on joint surface.
Sealant composition recommendations on request.

Widener profile fastening plan

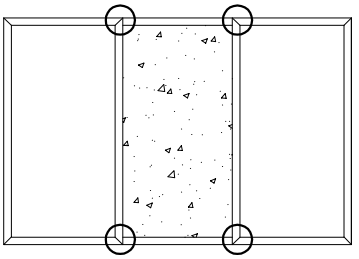

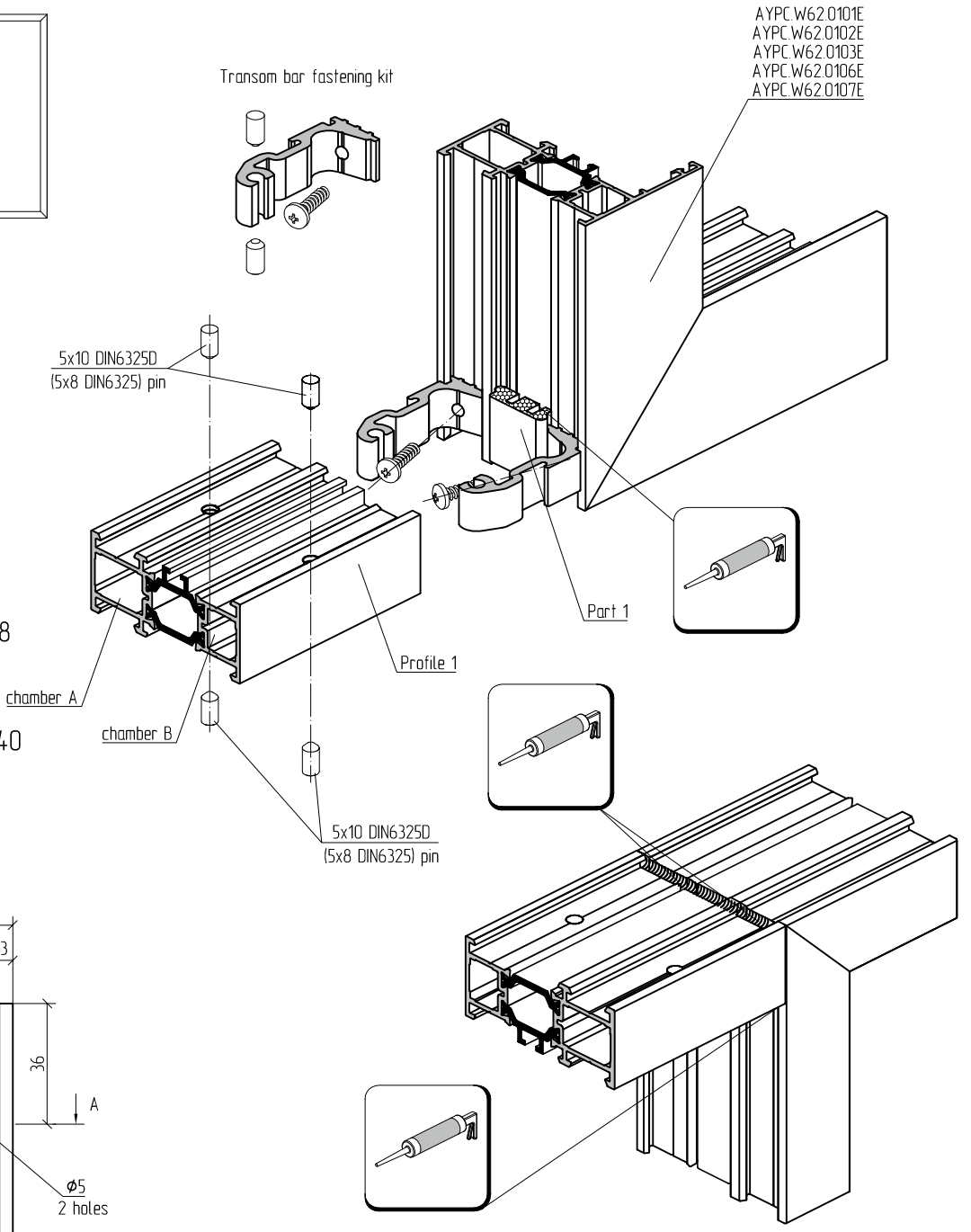

PW72.1
operation №8

AYPC.W62.1940
jig

Manchining plan for profile 1

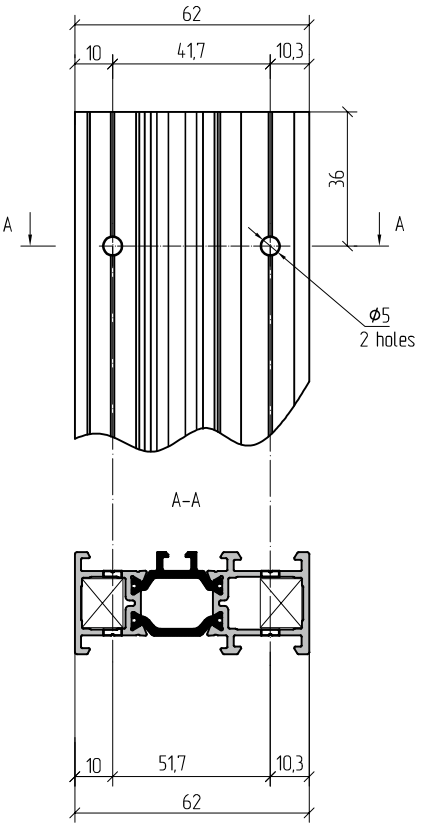

Profile 1	Fastening element		Qty	Part 1	Qty
	chamber A	chamber B			
AYPC.W62.0121E	AYPC.W62.0951	AYPC.W62.0951	2	AYPC.W62.0915	1
AYPC.W62.0122E	AYPC.W62.0951–01	AYPC.W62.0951–01	2	AYPC.W62.0915–01	1
AYPC.W62.0123E	AYPC.W62.0951–02	AYPC.W62.0951–02	2	AYPC.W62.0915–02	1

Apply silicone sealant on joint surface.
Sealant composition recommendations on request.
Use 5x8 DIN6325 pin while installing AYPC.W62.0121E.

T connection of profiles at angle α = 45°...90°

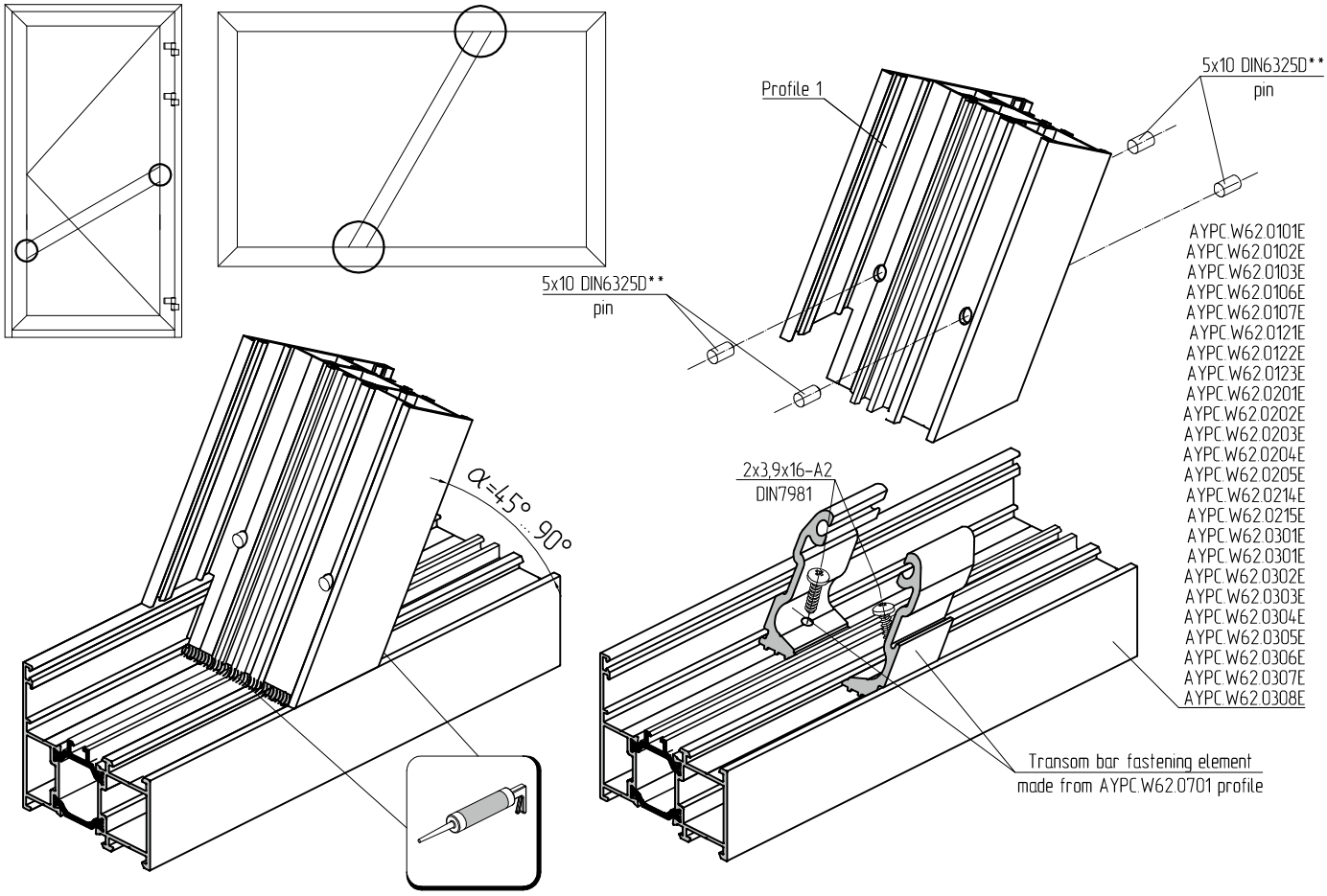

Profile 1	H, mm	Auxiliary dimensions, mm	Angle α									
			45	50	55	60	65	70	75	80	85	90
AYPC.W62.0101E** AYPC.W62.0121E AYPC.W62.0301E** AYPC.W62.0306E	13	$B=\frac{H}{\sin\alpha}$	18,4	17,0	15,9	15,0	14,3	13,8	13,5	13,2	13,0	13,0
		$S=22\cdot\sin\alpha$	15,6	16,9	18,0	19,1	19,9	20,7	21,3	21,7	21,9	22,0
		$X1=\frac{36}{\sin\alpha}+\frac{1,5}{tg\alpha}$	52,4	48,3	45,0	42,4	40,4	38,9	37,7	36,8	36,3	36,0
		$X2=\frac{36}{\sin\alpha}$	50,9	47,0	43,9	41,6	39,7	38,3	37,3	36,6	36,1	36,0
AYPC.W62.0102E AYPC.W62.0107E AYPC.W62.0122E AYPC.W62.0302E AYPC.W62.0304E AYPC.W62.0305E AYPC.W62.0307E AYPC.W62.0308E	22,6	$B=\frac{H}{\sin\alpha}$	32,0	29,5	27,6	26,1	24,9	24,1	23,4	22,9	22,7	22,6
		$S=22\cdot\sin\alpha$	15,6	16,9	18,0	19,1	19,9	20,7	21,3	21,7	21,9	22,0
		$X1=\frac{36}{\sin\alpha}+\frac{1,5}{tg\alpha}$	52,4	48,3	45,0	42,4	40,4	38,9	37,7	36,8	36,3	36,0
		$X2=\frac{36}{\sin\alpha}$	50,9	47,0	43,9	41,6	39,7	38,3	37,3	36,6	36,1	36,0
AYPC.W62.0103E AYPC.W62.0123E AYPC.W62.0303E	36,2	$B=\frac{H}{\sin\alpha}$	51,2	47,3	44,2	41,8	39,9	38,5	37,5	36,8	36,3	36,2
		$S=22\cdot\sin\alpha$	15,6	16,9	18,0	19,1	19,9	20,7	21,3	21,7	21,9	22,0
		$X1=\frac{36}{\sin\alpha}+\frac{1,5}{tg\alpha}$	52,4	48,3	45,0	42,4	40,4	38,9	37,7	36,8	36,3	36,0
		$X2=\frac{36}{\sin\alpha}$	50,9	47,0	43,9	41,6	39,7	38,3	37,3	36,6	36,1	36,0
AYPC.W62.0106E	42,2	$B=\frac{H}{\sin\alpha}$	59,7	55,1	51,5	48,7	46,6	44,9	43,7	42,9	42,4	42,2
		$S=22\cdot\sin\alpha$	15,6	16,9	18,0	19,1	19,9	20,7	21,3	21,7	21,9	22,0
		$X1=\frac{36}{\sin\alpha}+\frac{1,5}{tg\alpha}$	52,4	48,3	45,0	42,4	40,4	38,9	37,7	36,8	36,3	36,0
		$X2=\frac{36}{\sin\alpha}$	50,9	47,0	43,9	41,6	39,7	38,3	37,3	36,6	36,1	36,0

T connection of profiles at angle α = 45°...90°

Manchining plan for profile 1

1. Cutting of profile 1 at angle α=45°...90°

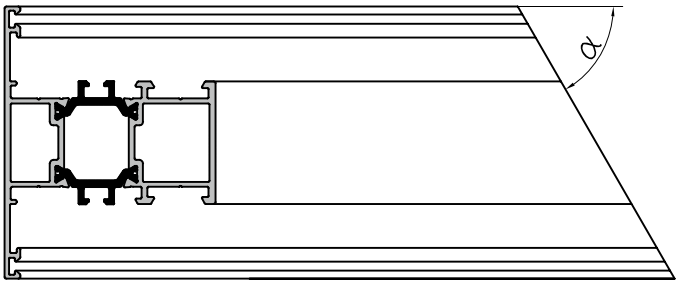

2. Profile 1 end cutting

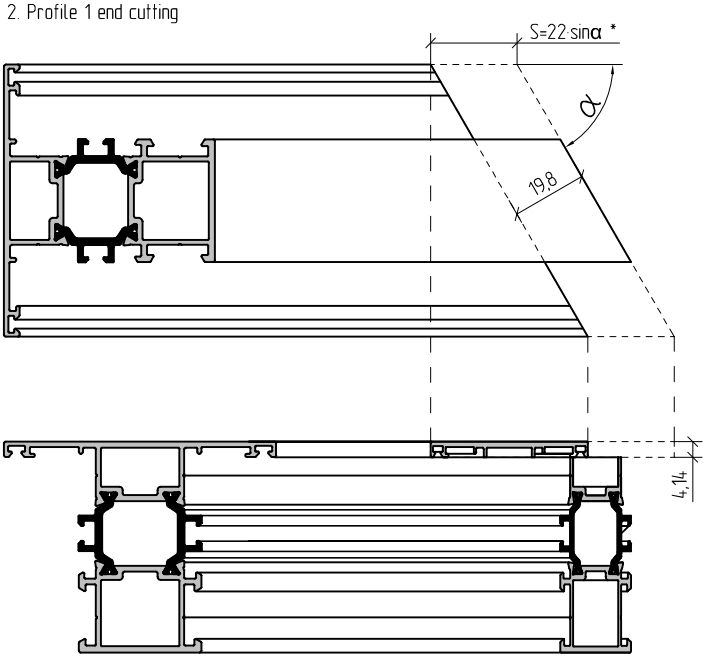

3. Marking and drilling of holes for 5x10 DIN6325D (5x8 DIN6325) pins

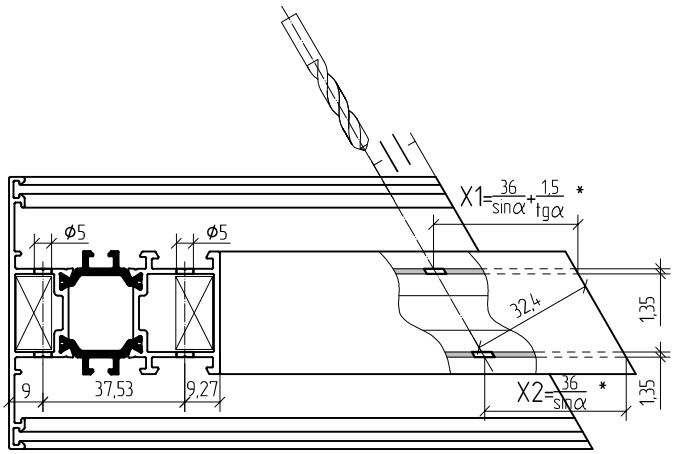

Machining of transom bar fastening element for installation of 3,9x16-A2 DIN7981 self-tapping screw

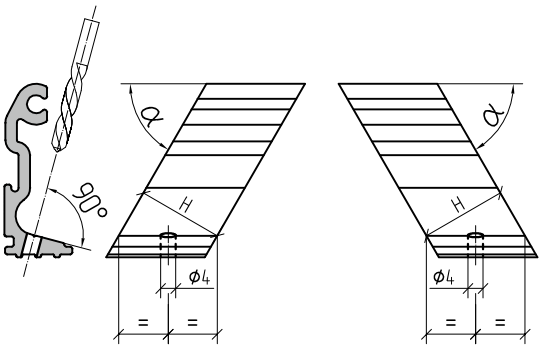

Cutting of transom bar fastening elements

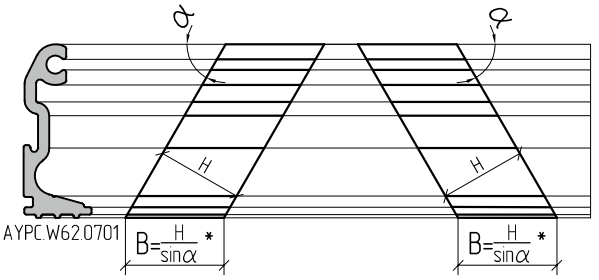

* Dimensions for standard angles are shown in table.
** Use 5x8 DIN6325 pin while installing AYPC.W62.0101E and AYPC.W62.0301E.

Drain profile installation on exterior opening door leaf

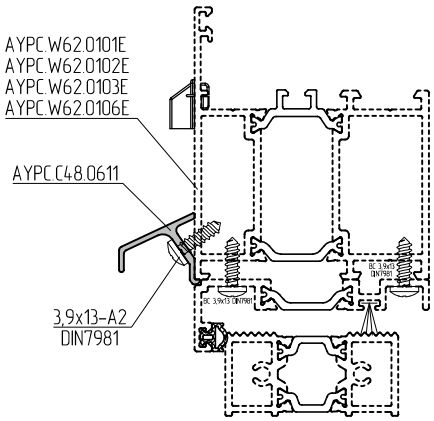

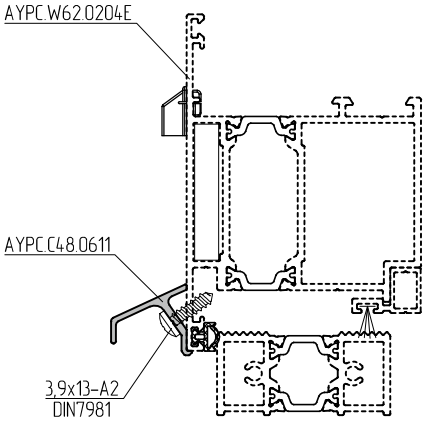

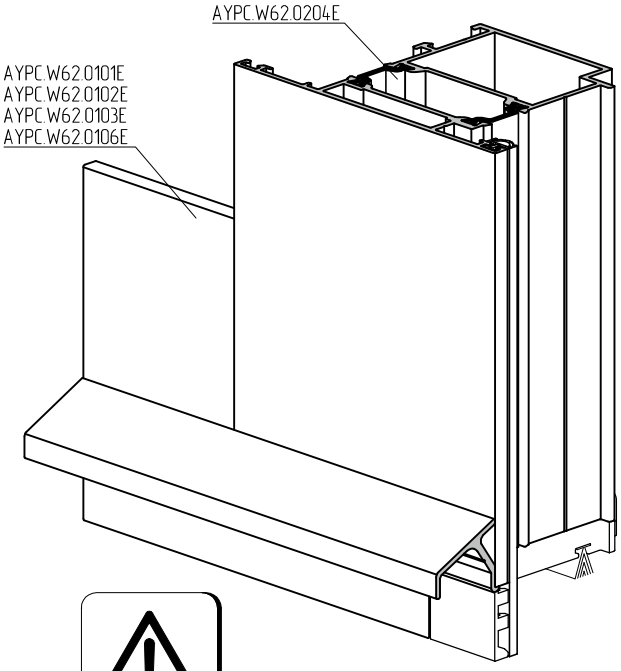

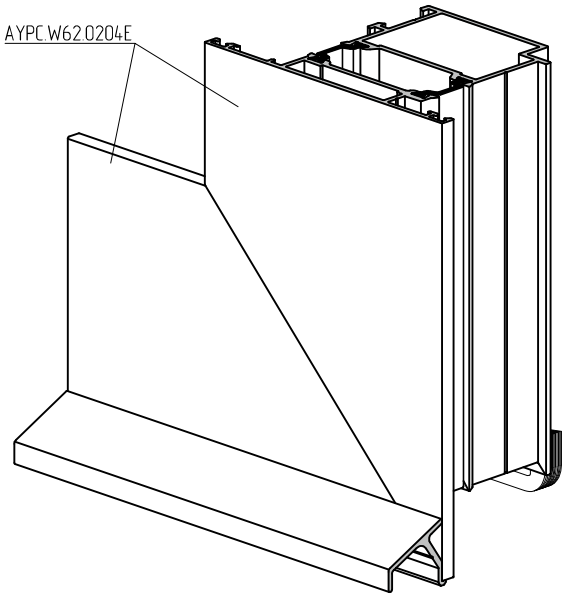

AYPC.C48.0611 drain profile cutting

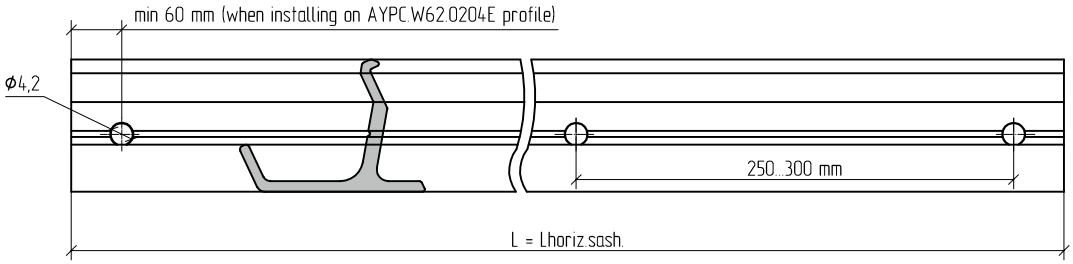

AYPC.C48.0611 profile machining for 3,9x13-A2 DIN7981 installation

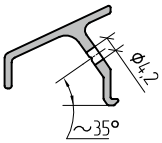

Drain profile installation on interior opening door leaf

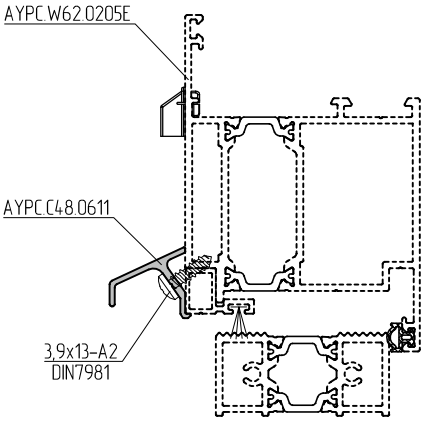

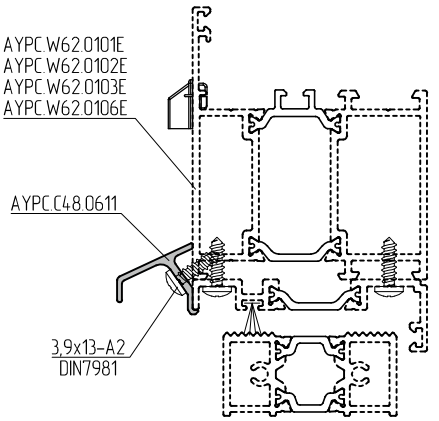

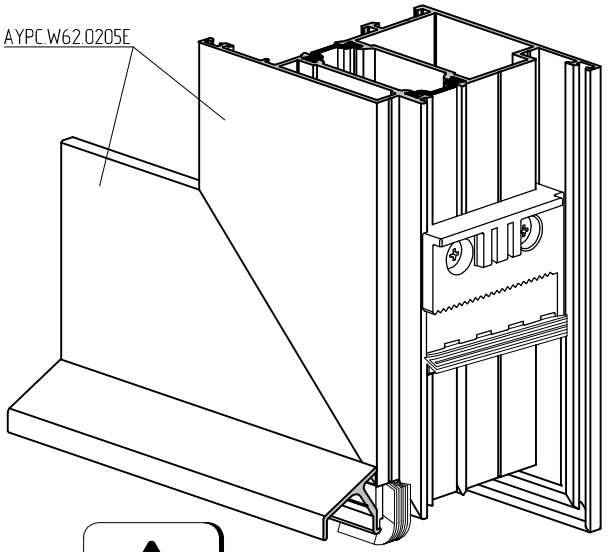

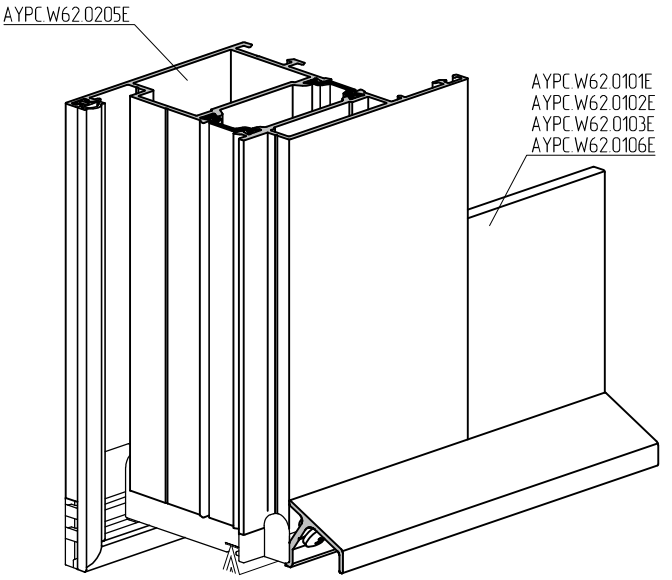

AYPC.C48.0611 drain profile cutting

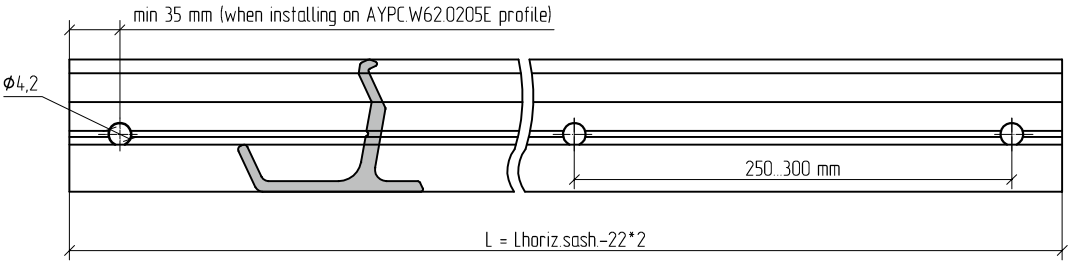

AYPC.C48.0611 profile machining for 3,9x13-A2 DIN7981 installation

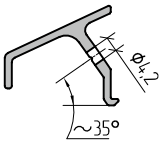

Drain profile installation on passive door leaf

Interior opening

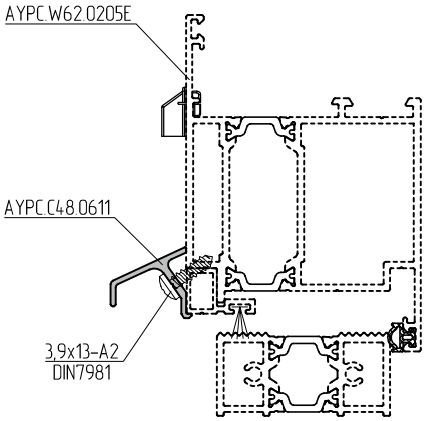

Exterior opening

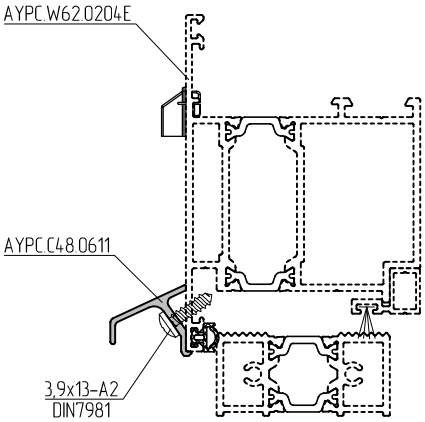

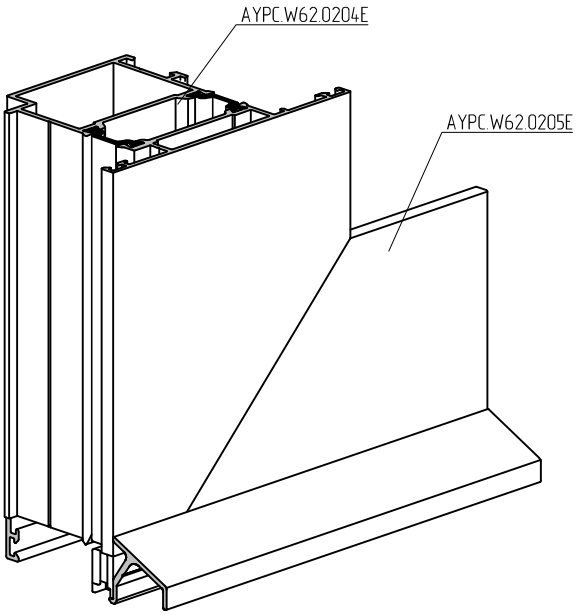

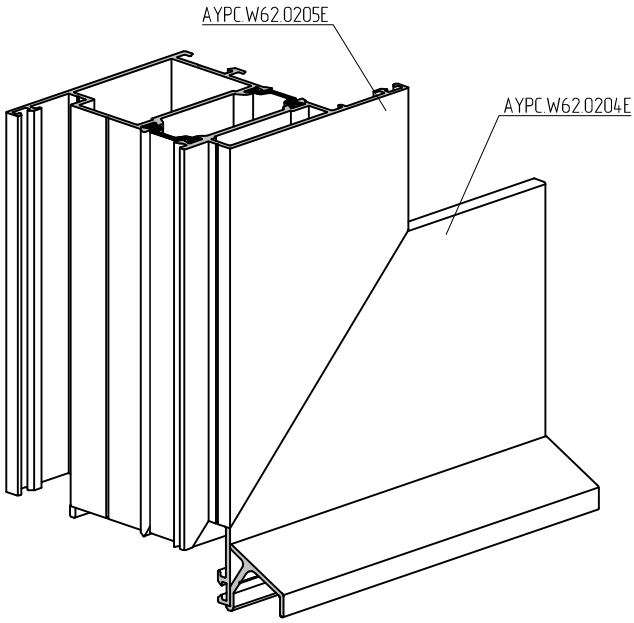

AYPC.C48.0611 drain profile cutting

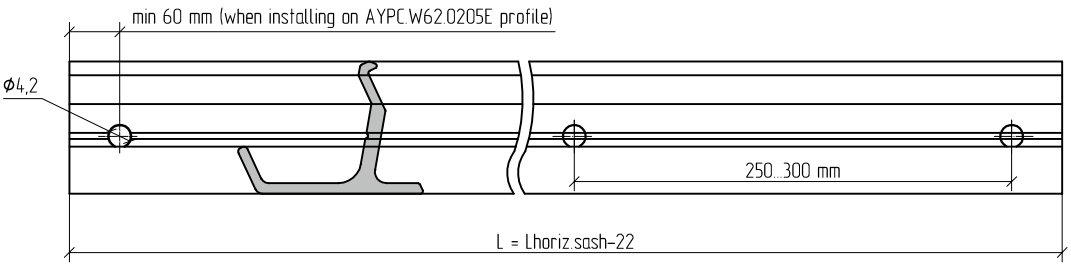

AYPC.C48.0611 profile machining for 3,9x13-A2 DIN7981 installation

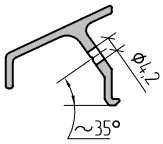

Machining of AYPC.W62.0201E,-0202E,-0203E, AYPC.W62.0221E, -0222E, -0223E sashes for installation of window hardware.

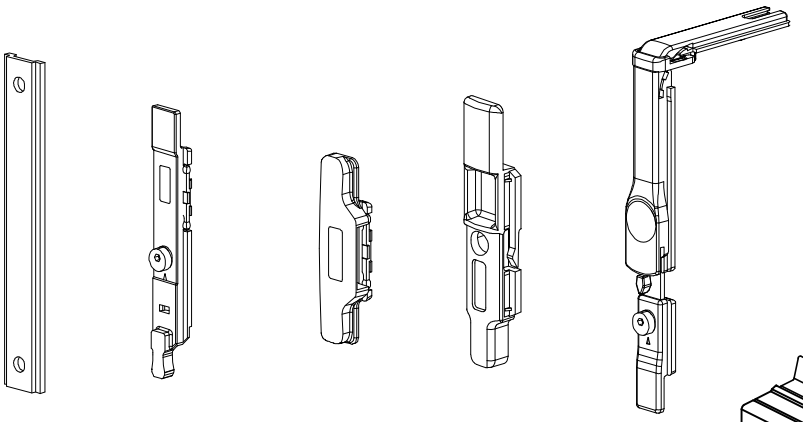

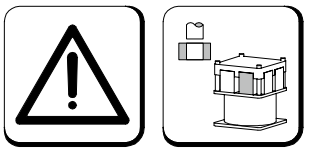

PW72.1
operation №6

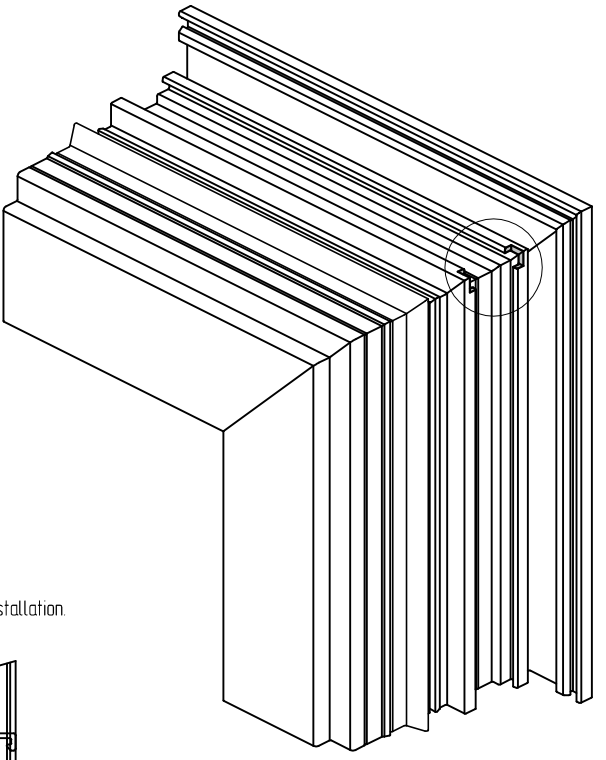

Sash machining for installation of window hardware.

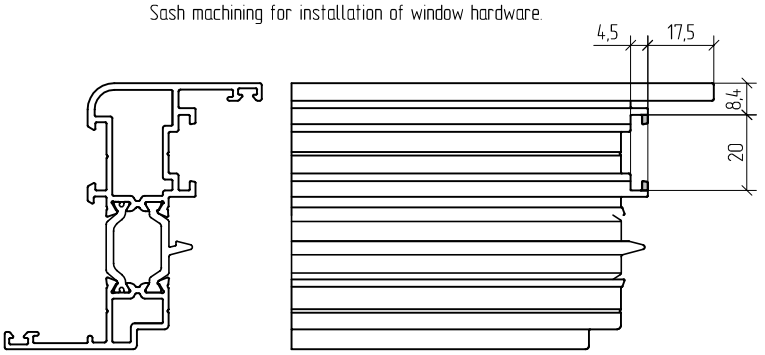

Sash machining for window handle installation.

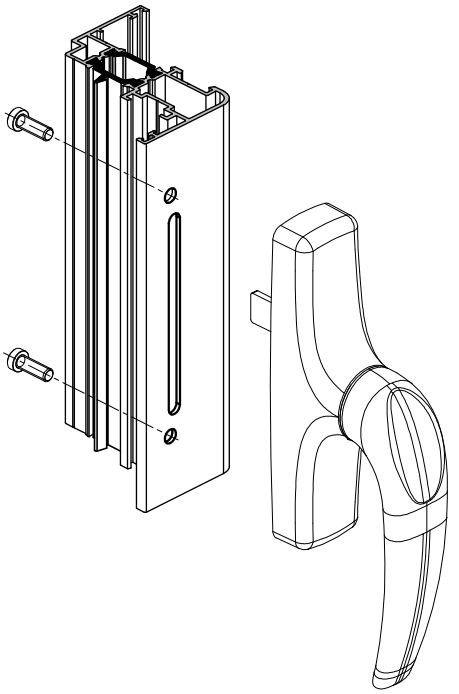

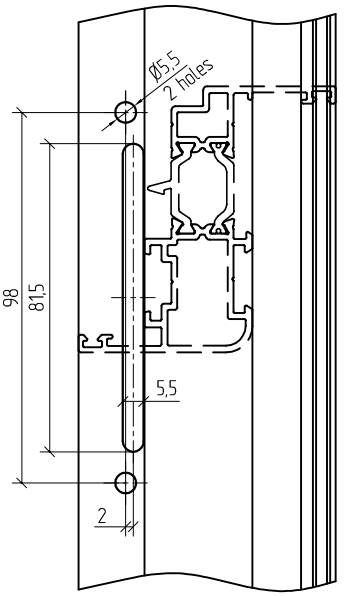

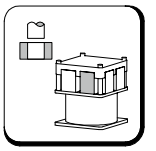

PW72.1
operation №1

AYPC.C48.0612 rod profile machining.

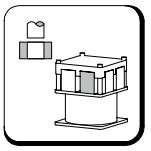

PW72.1
operation №2

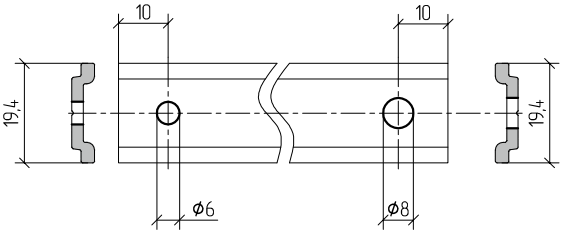

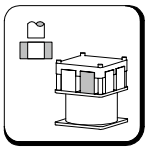

PW72.1
operation №3

Ventilation holes and holes for condensate removal

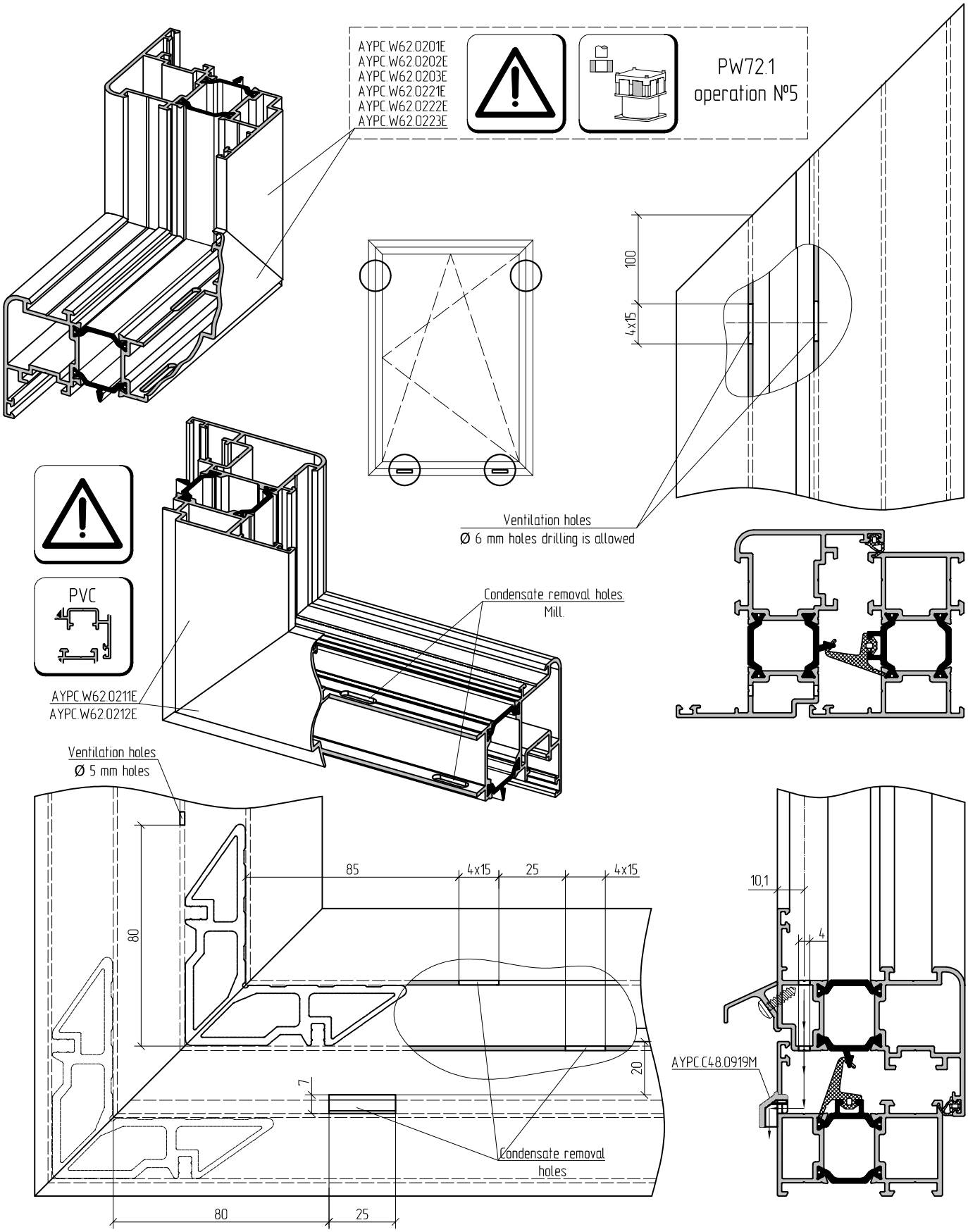

Note. For frame width up to 450 mm one hole is centered,
for width more than 900 mm – additional hole in the center.

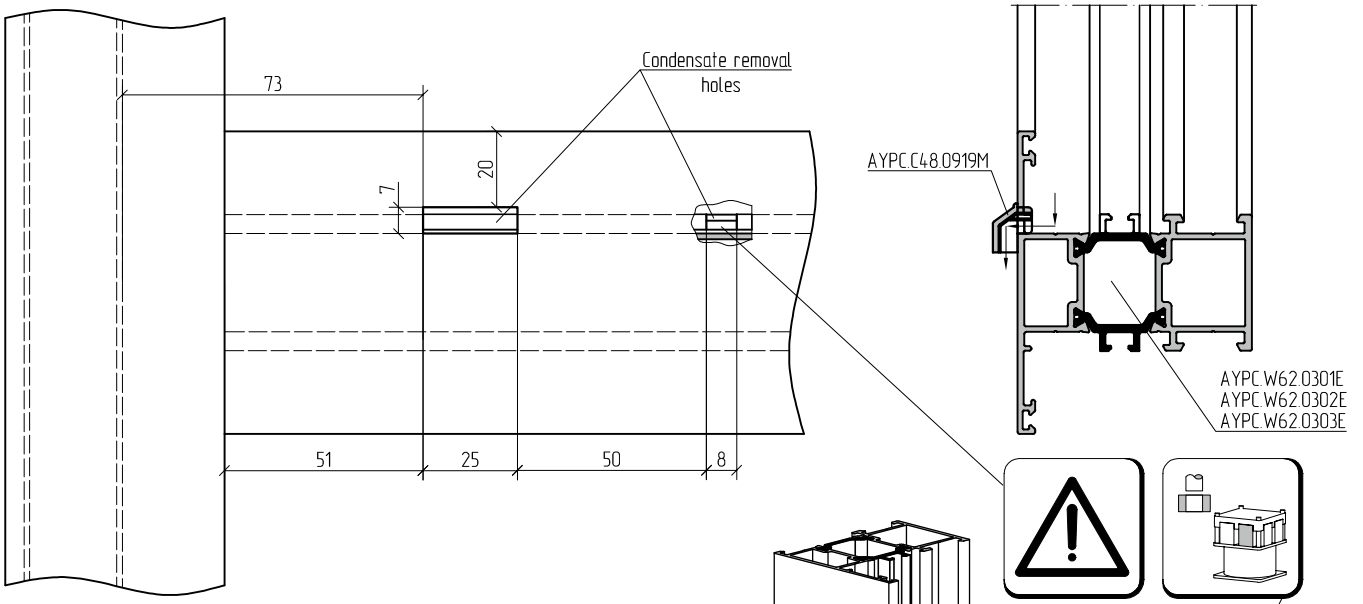

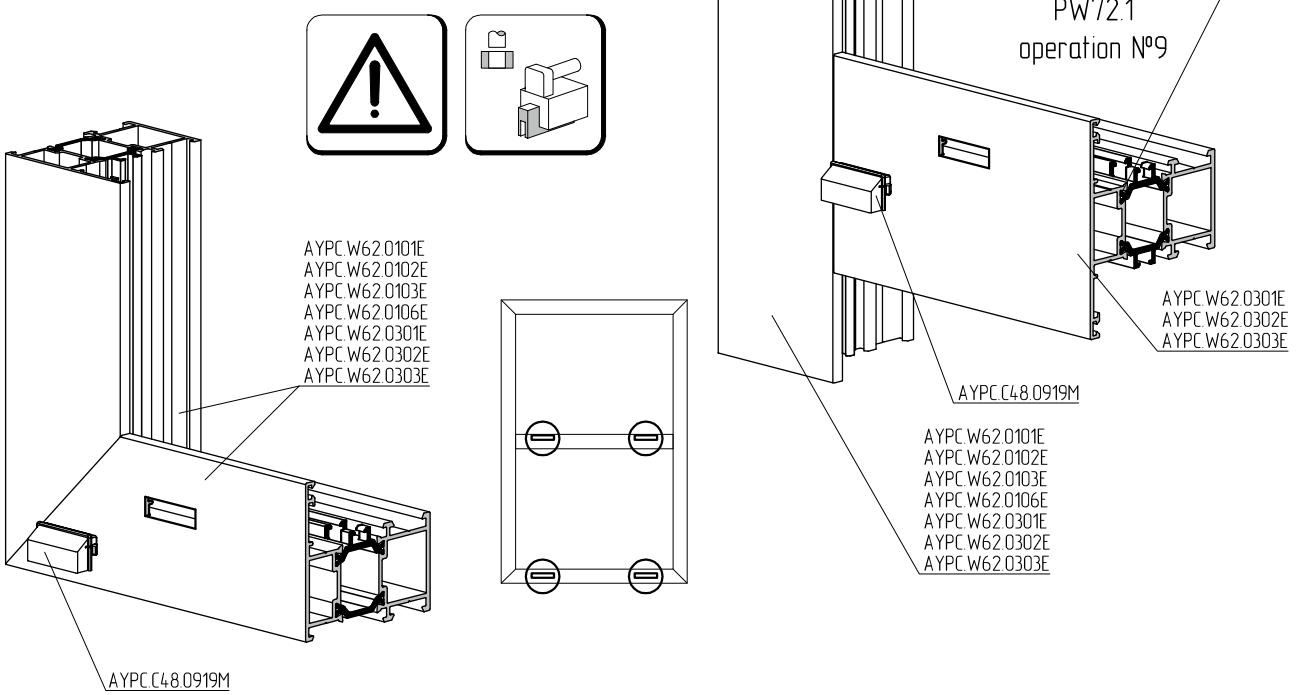

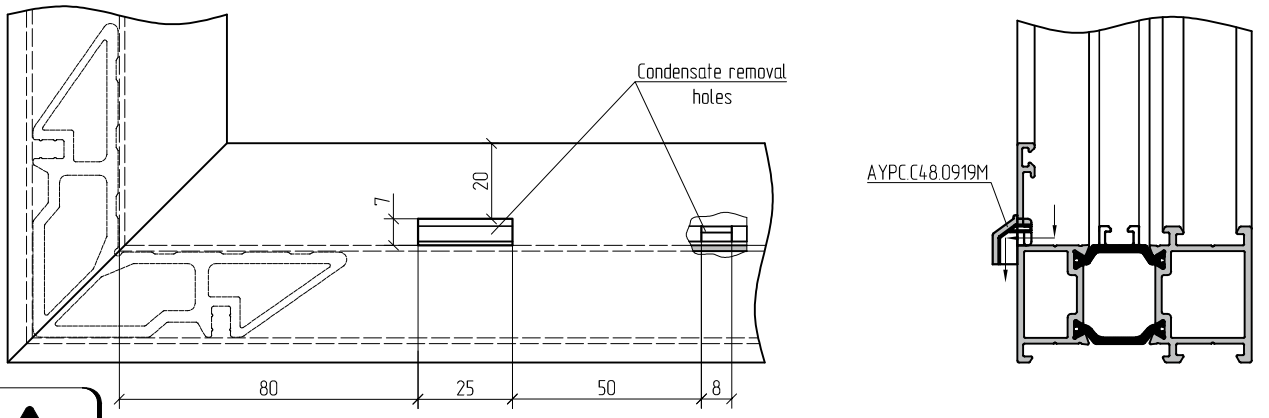

Note. For frame width up to 450 mm one hole is centered, for width more than 900 mm – additional hole in the center.

Drain profile installation on window sash

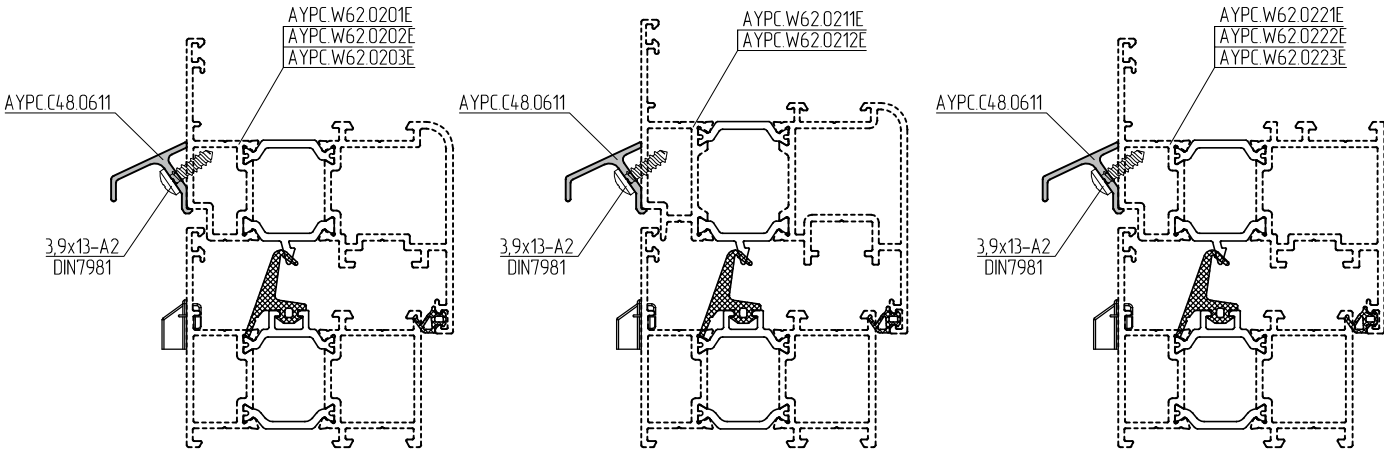

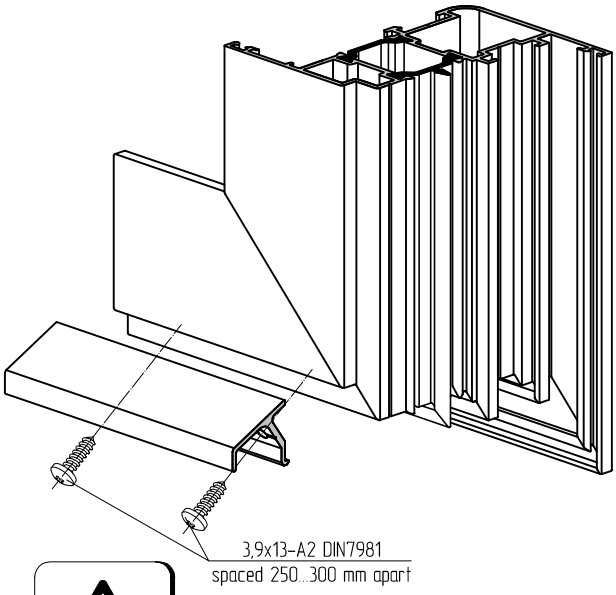

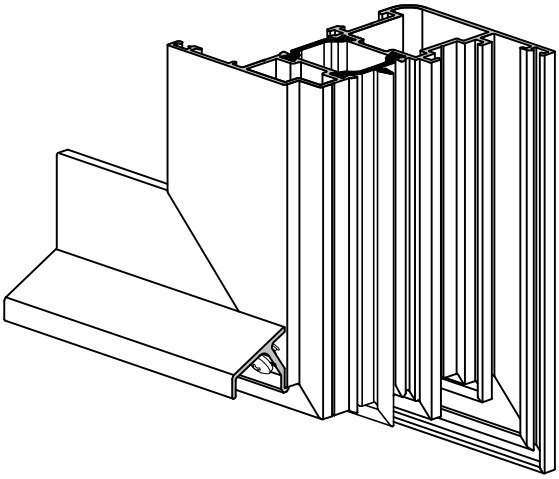

AYPC.C48.0611 drain profile cutting

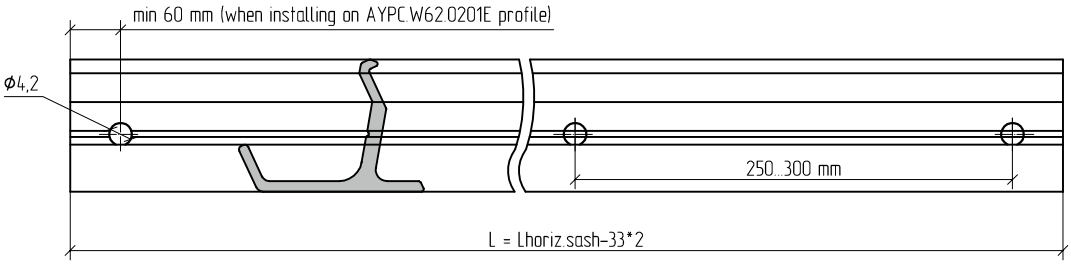

AYPC.C48.0611 profile machining for 3,9x13-A2 DIN7981 installation

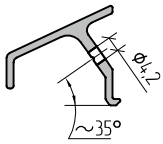

Ventilation holes and holes for condensate removal

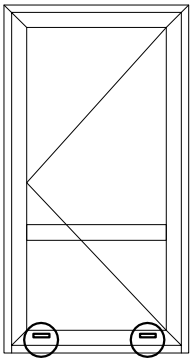

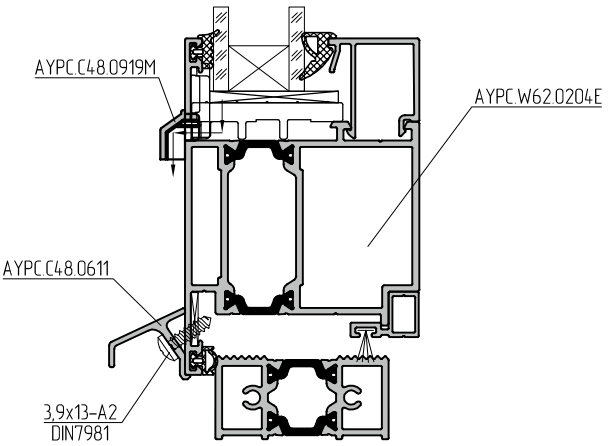

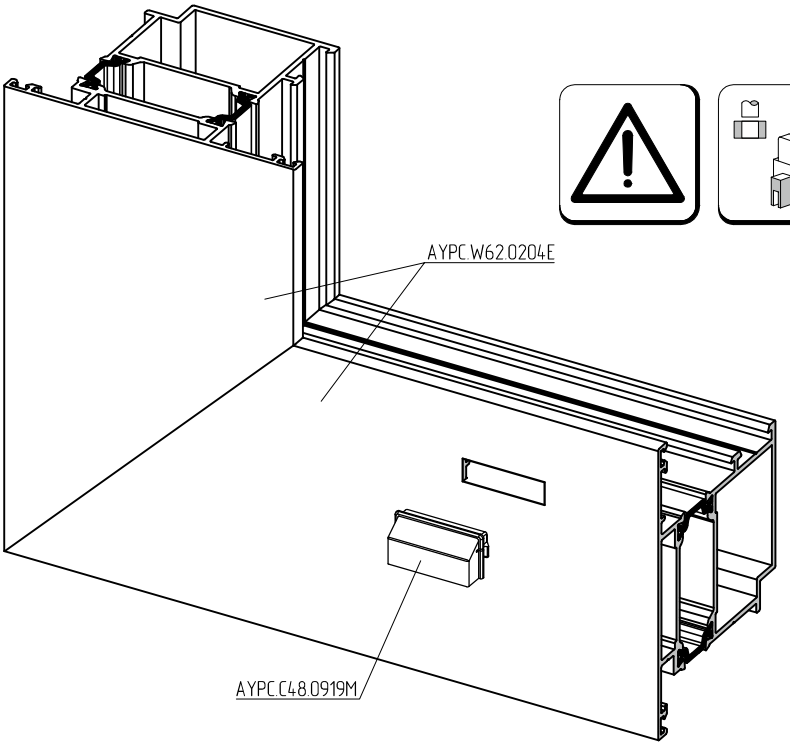

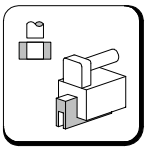

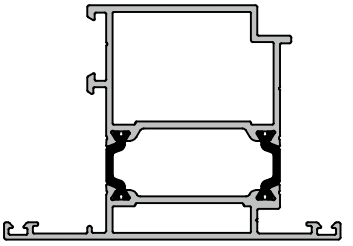

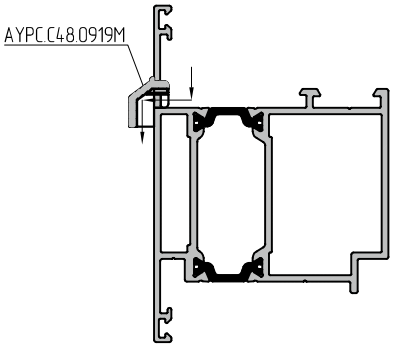

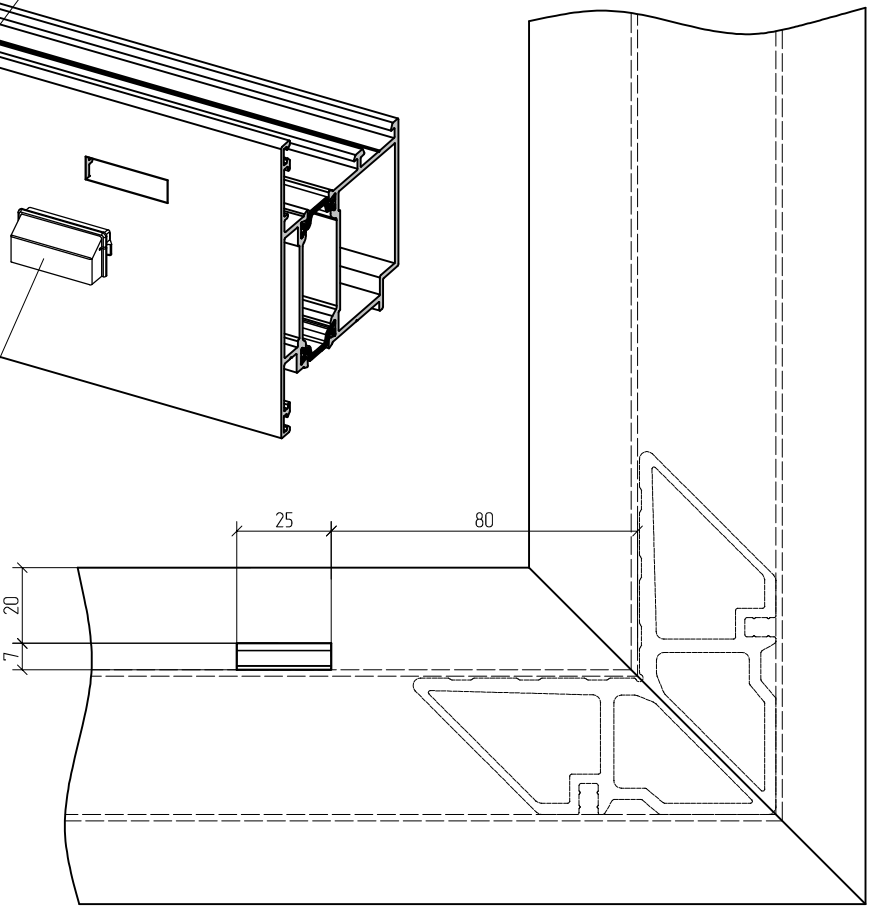

Ventilation holes and holes for condensate removal

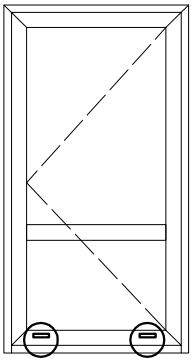

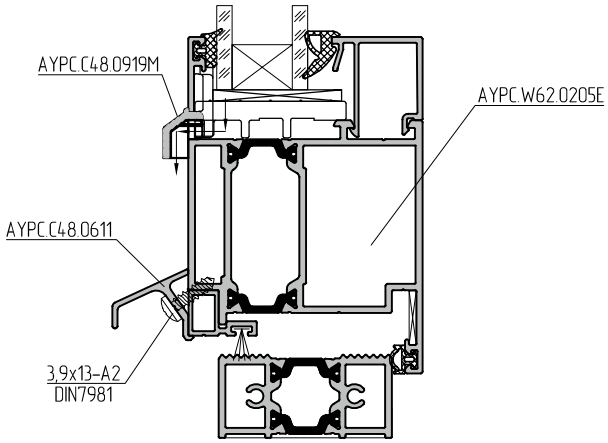

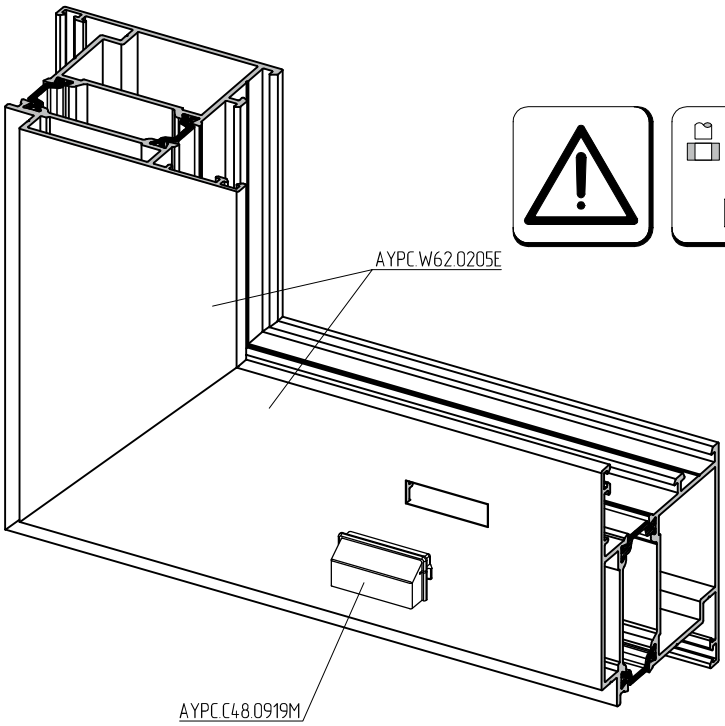

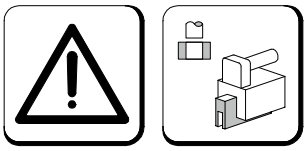

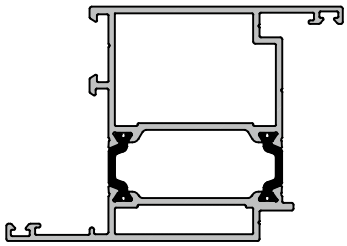

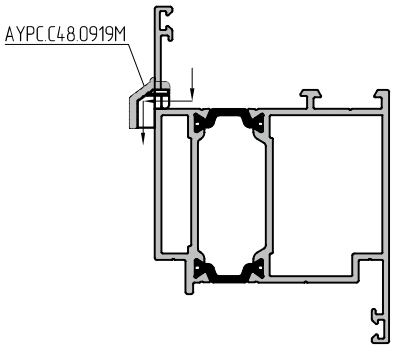

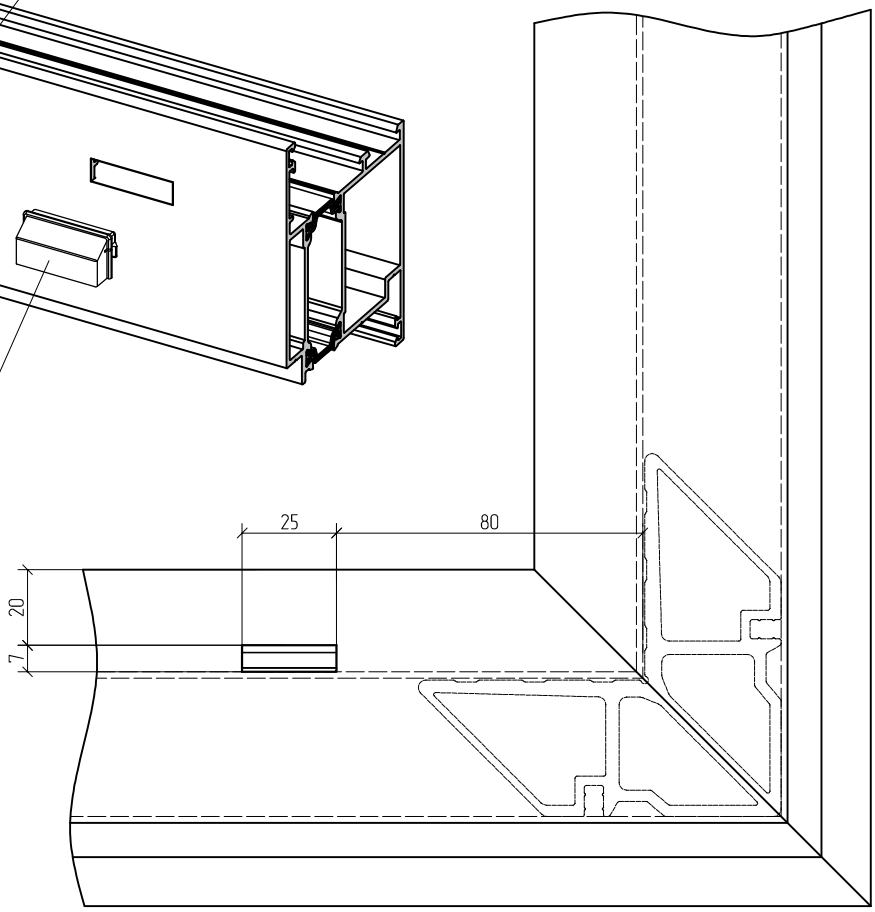

Ventilation holes and holes for condensate removal

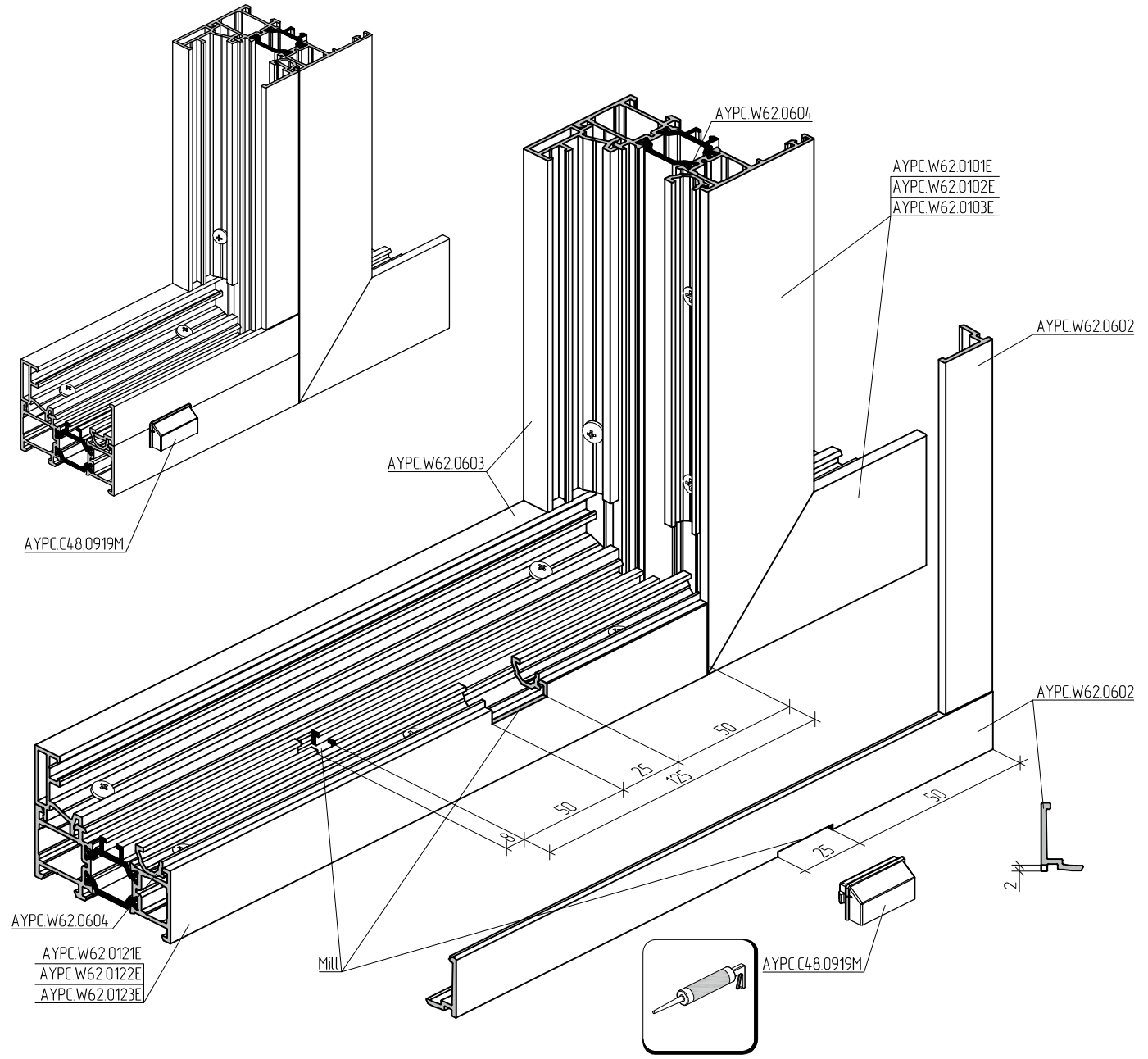

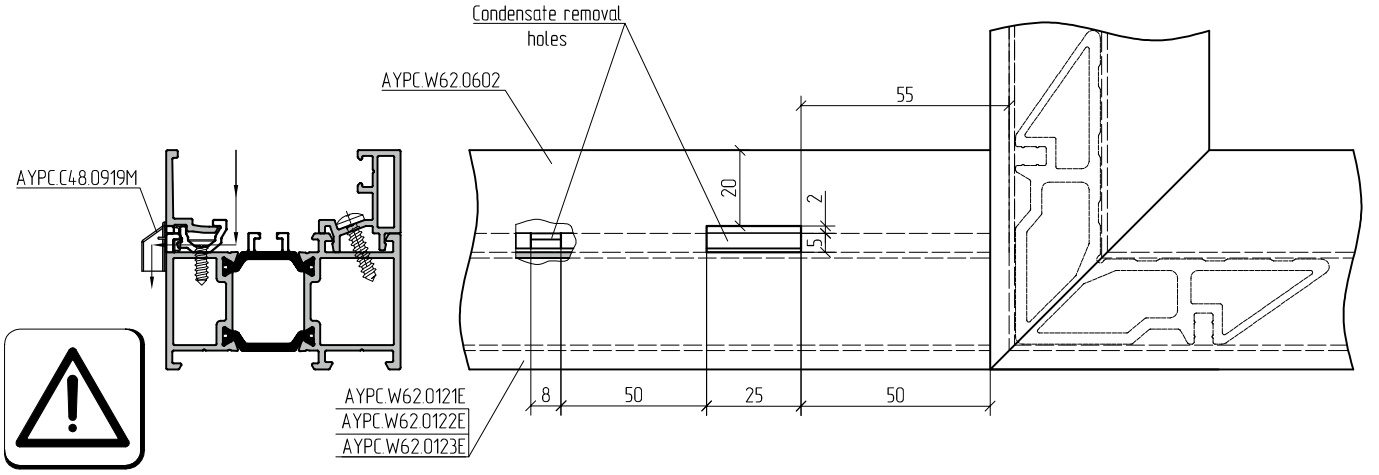

Ventilation holes and holes for condensate removal

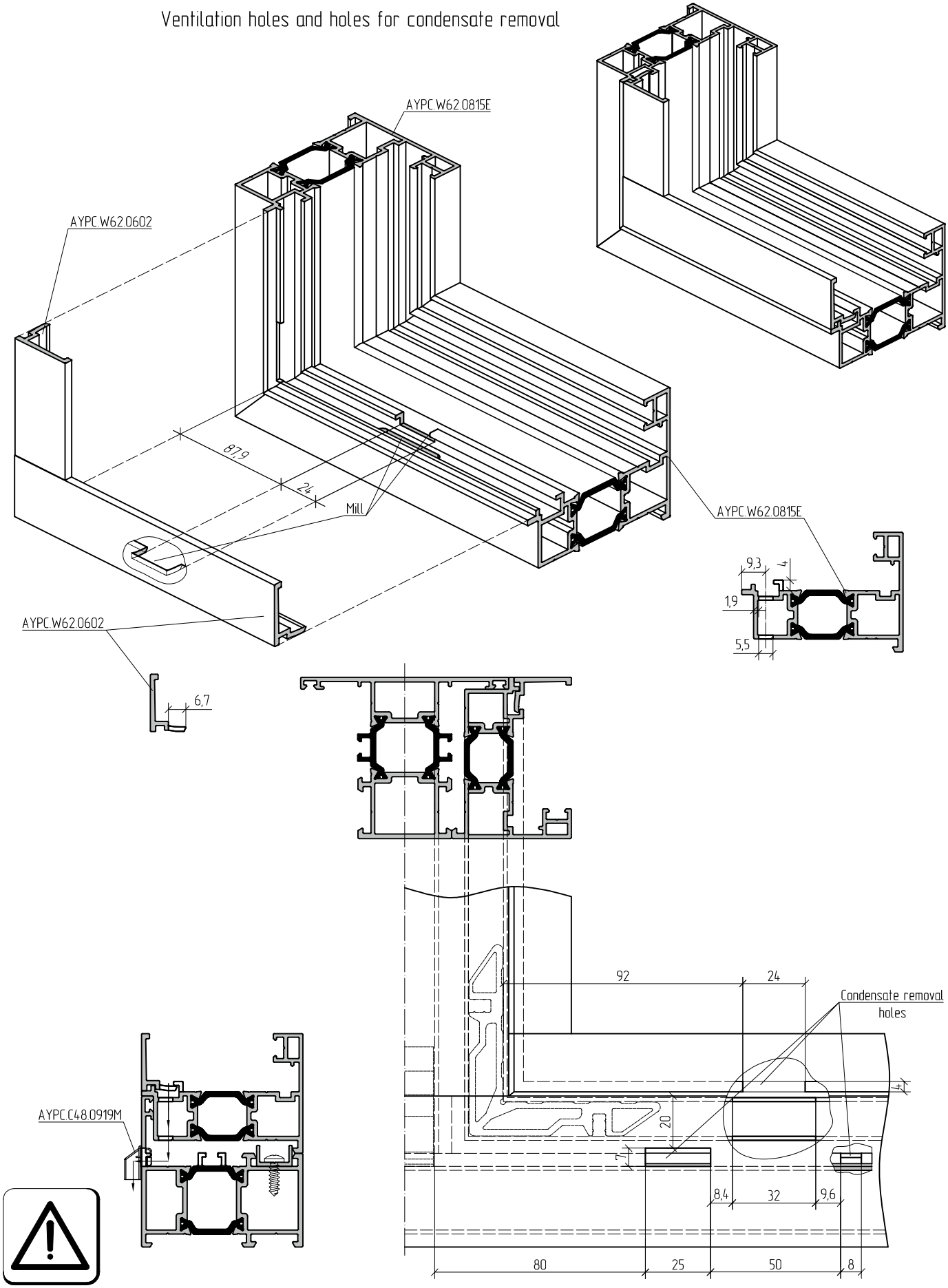

Corner connection assemblage AYPC.W62.0807E

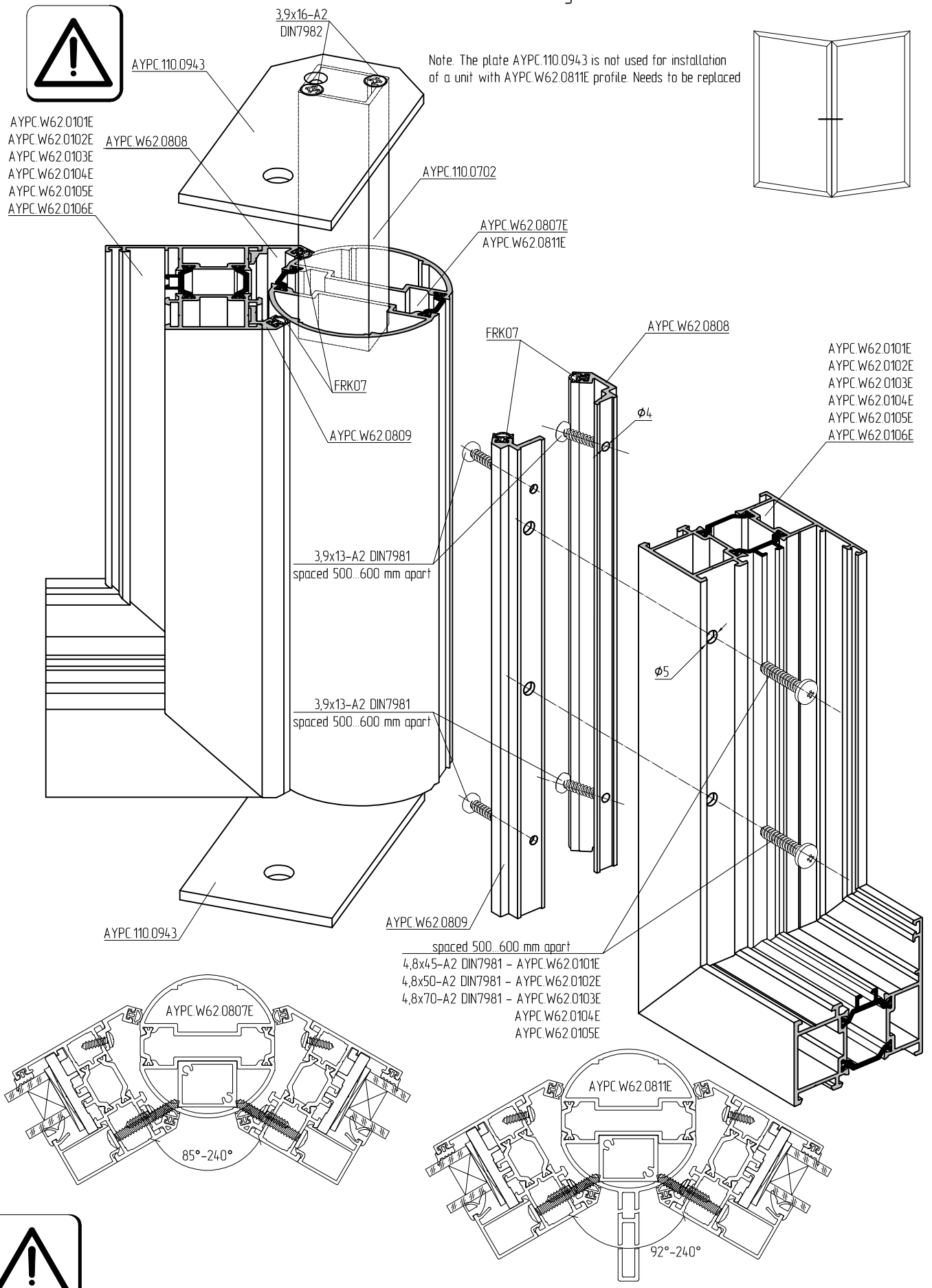

While installing 3,9x13-A2 DIN7981 leave 110mm from the edge of AYPC.W62.0808 and AYPC.W62.0809 profiles.

Corner connection assemblage 90°

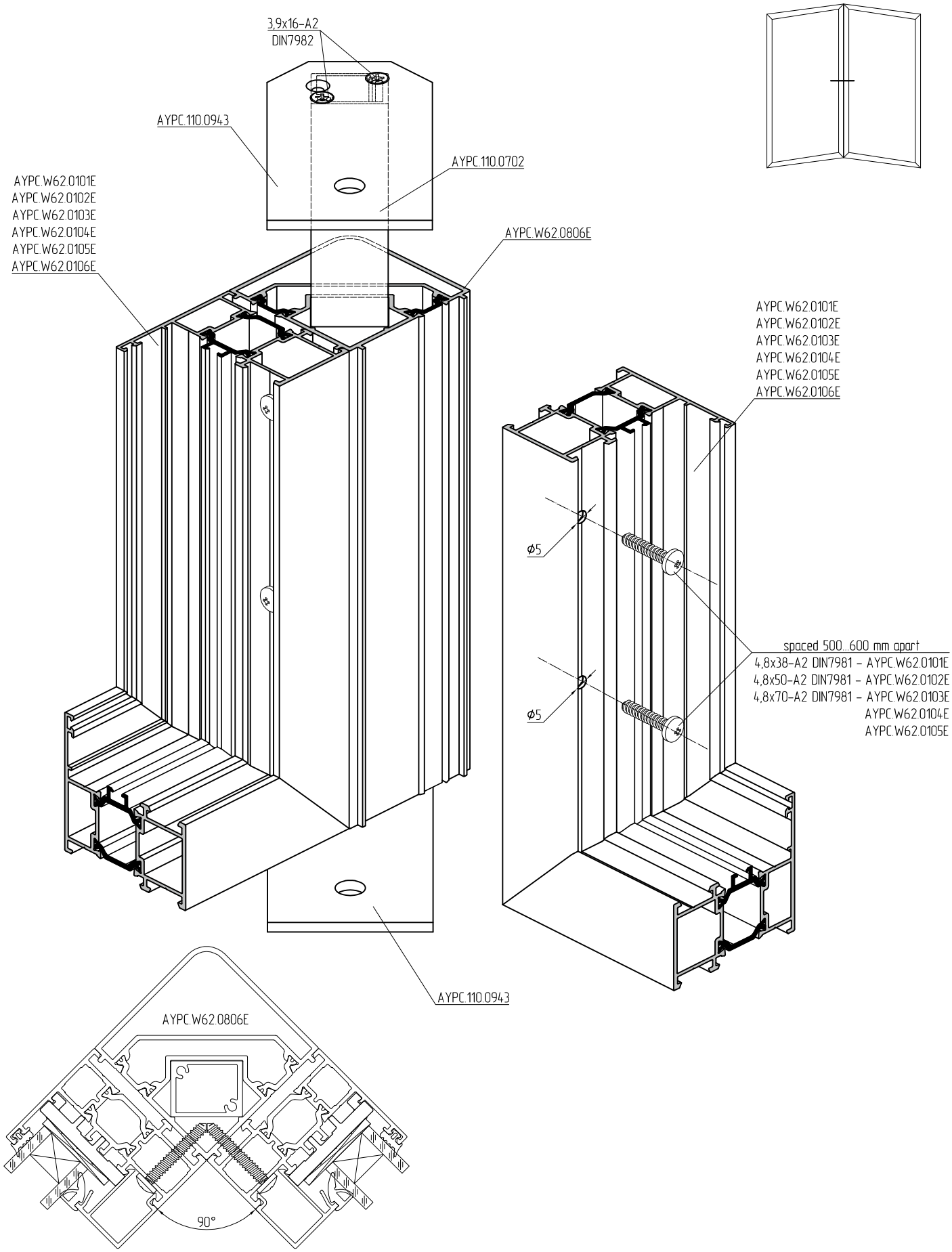

Thermal compensation connection

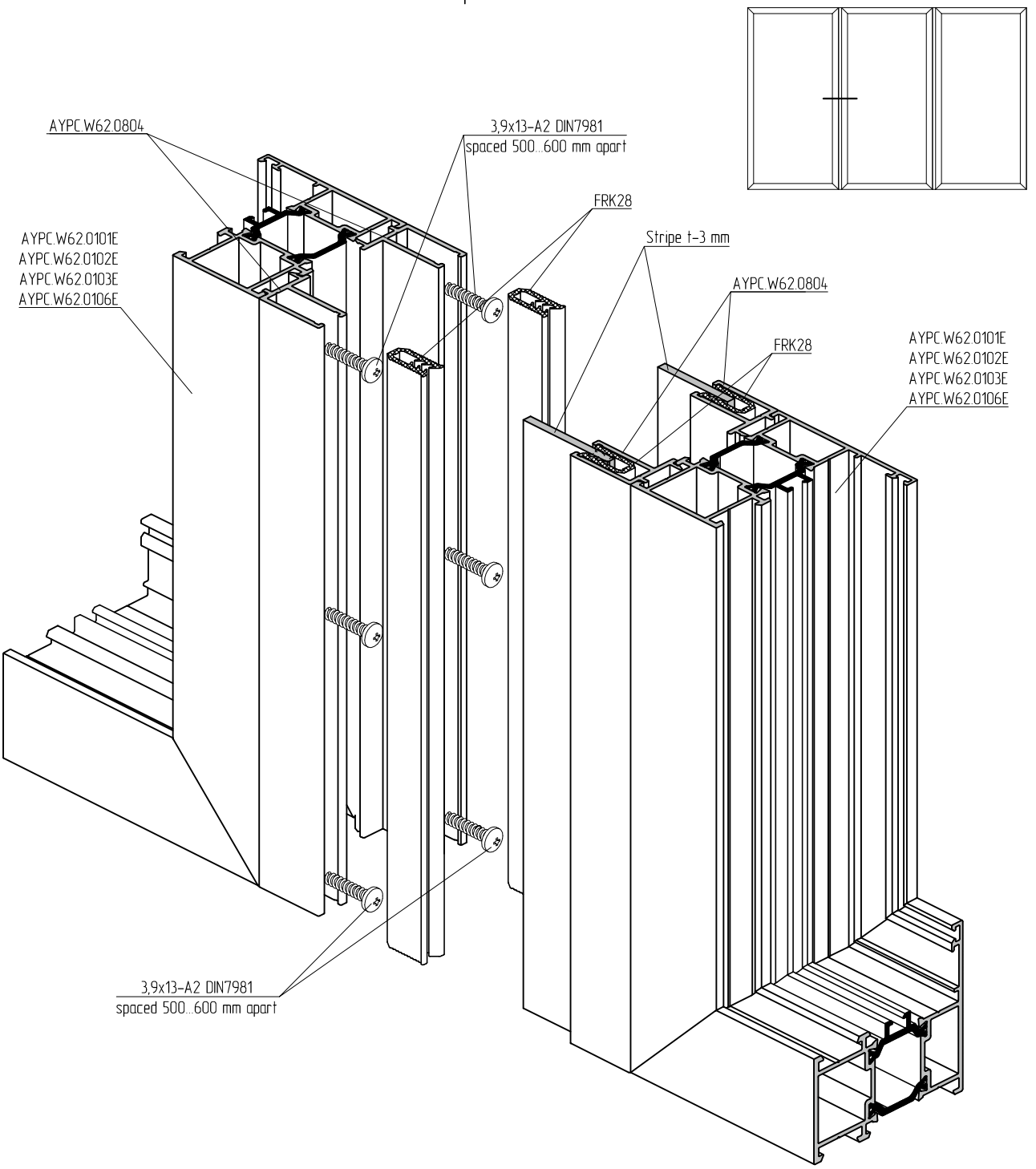

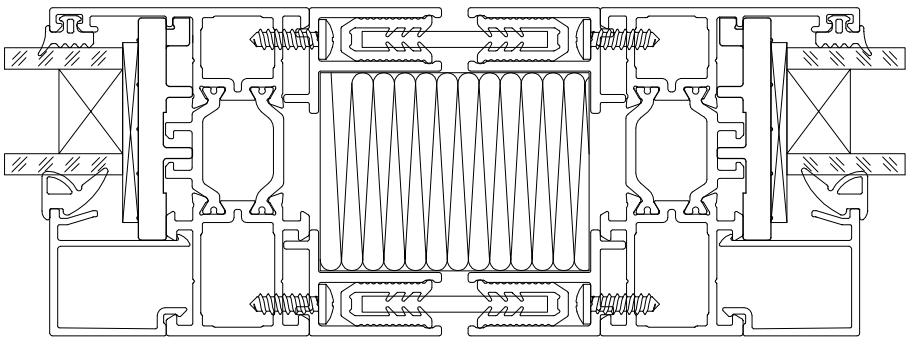

Installation plan of AYPC.W62.0801E threshold on AYPC.W62.0104E profile

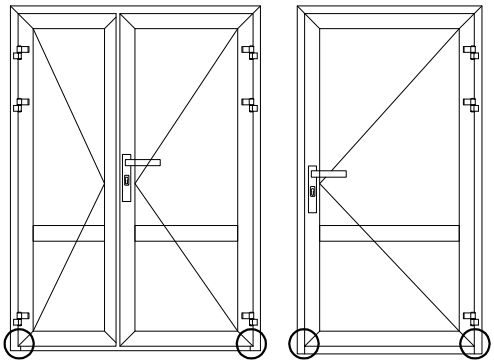

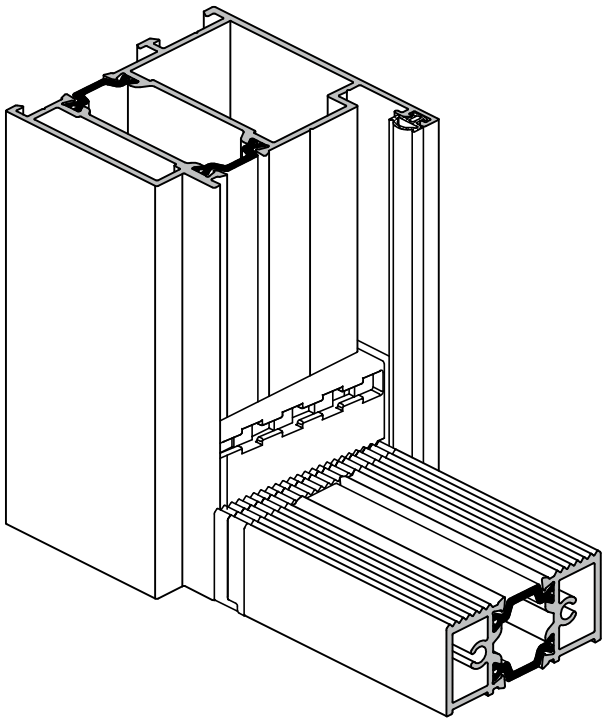

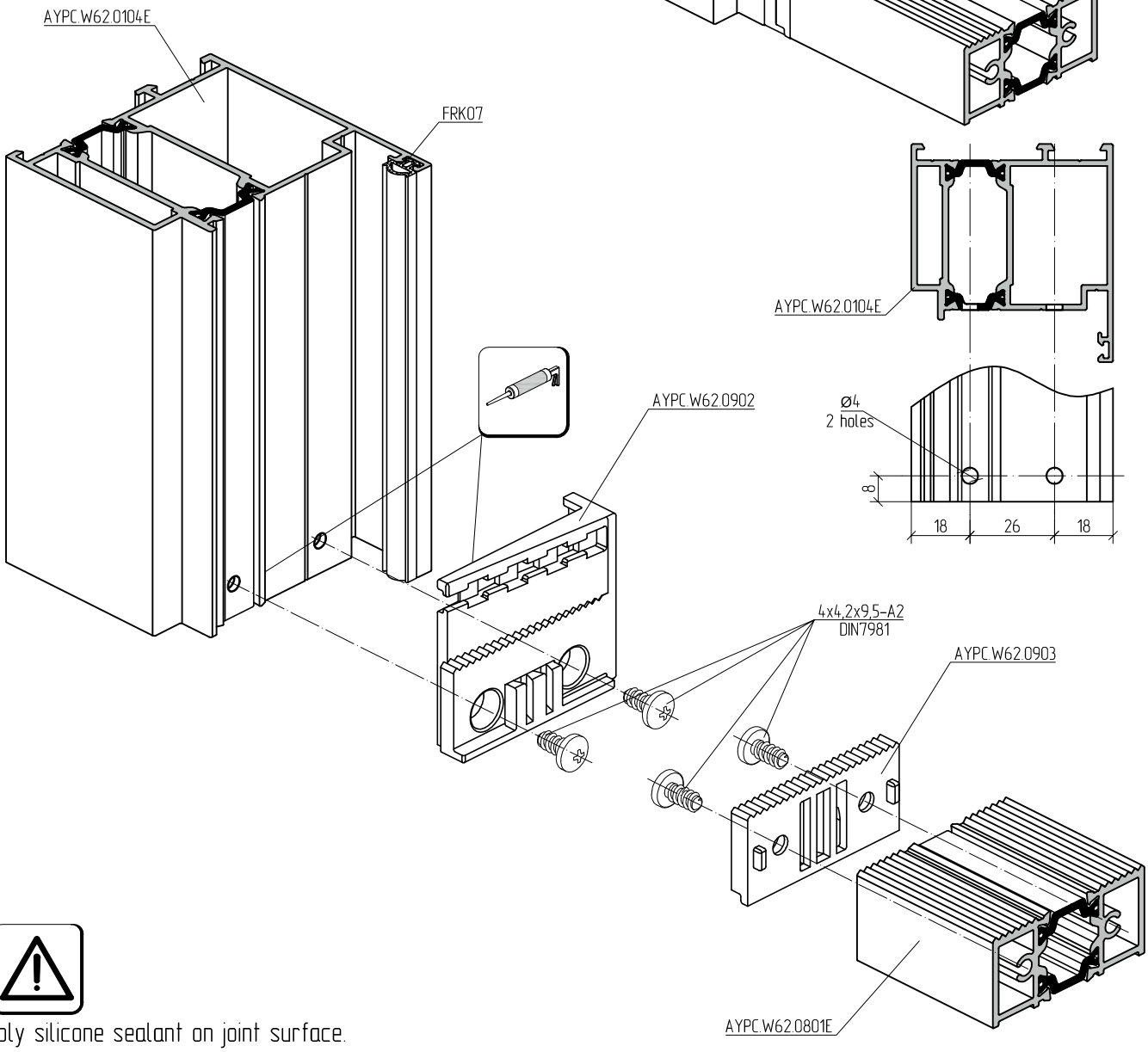

Apply silicone sealant on joint surface.
Sealant composition recommendations on request.

Installation plan of AYPC.W62.0802 threshold on AYPC.W62.0104E profile

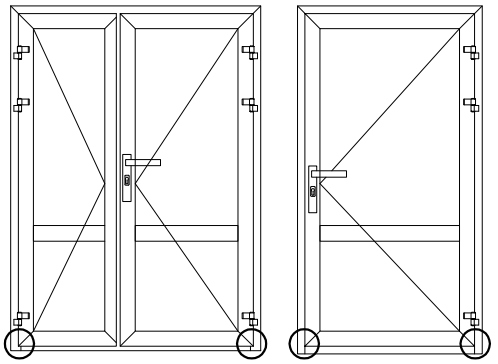

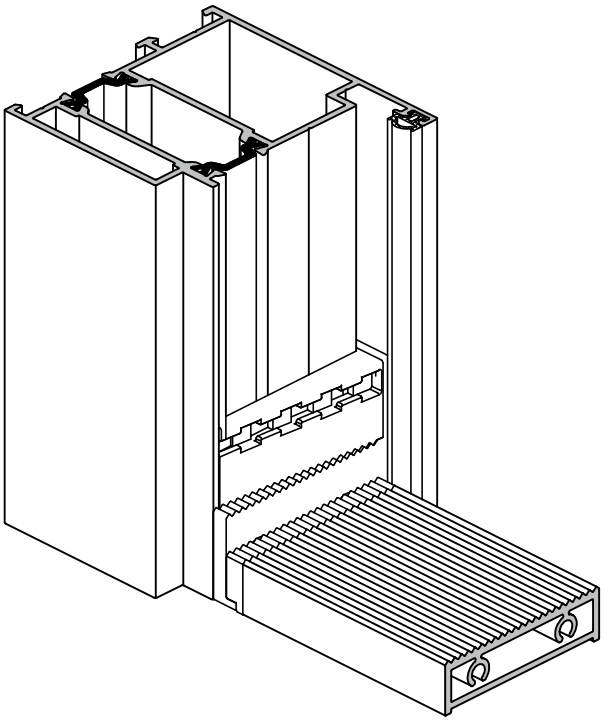

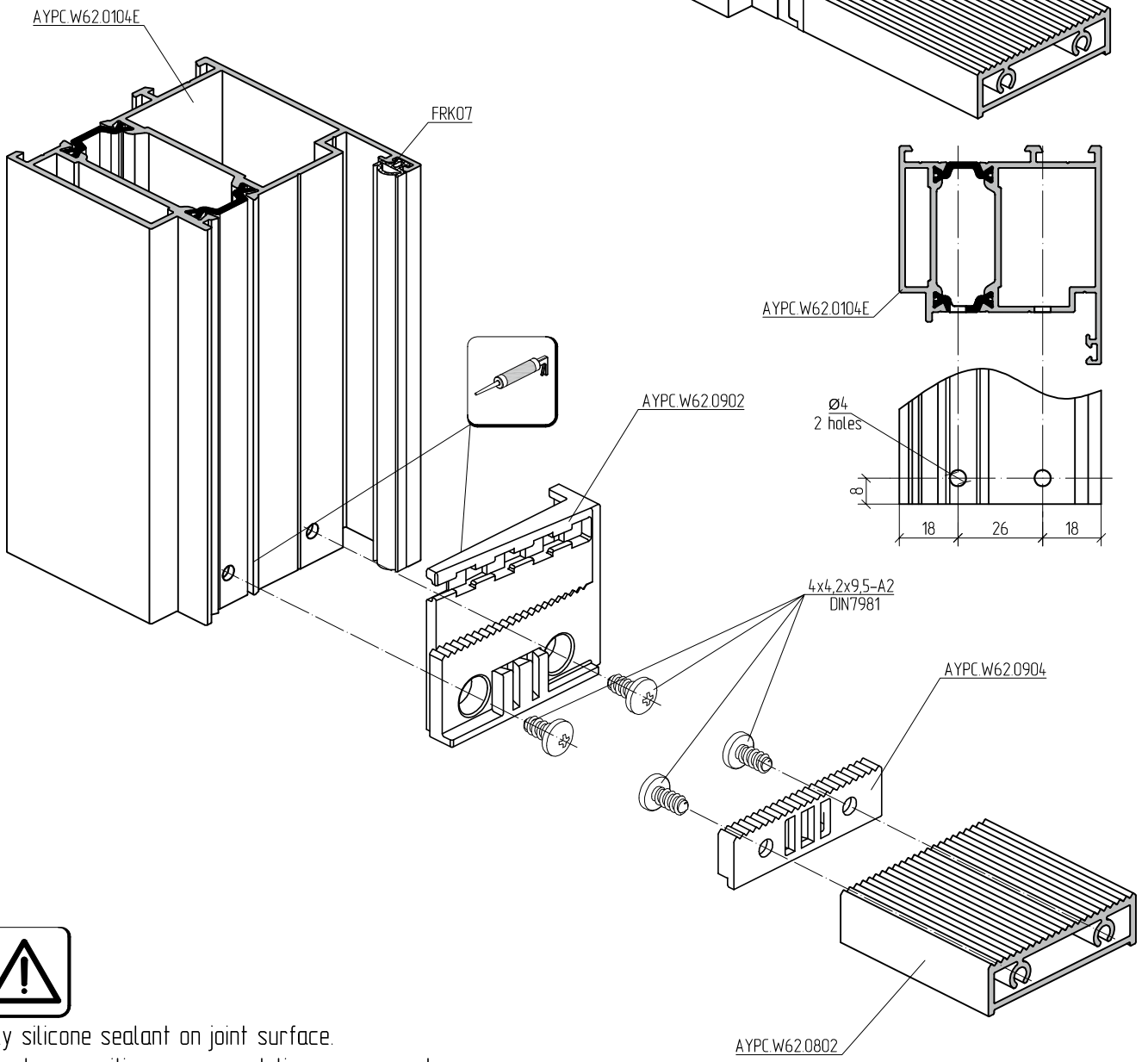

Apply silicone sealant on joint surface.
Sealant composition recommendations on request.

Installation plan of AYPC.W62.0801E threshold on AYPC.W62.0105E profile

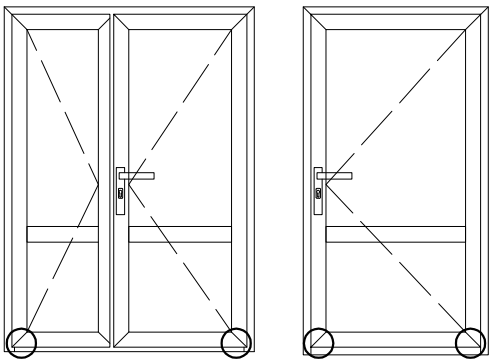

Interior opening

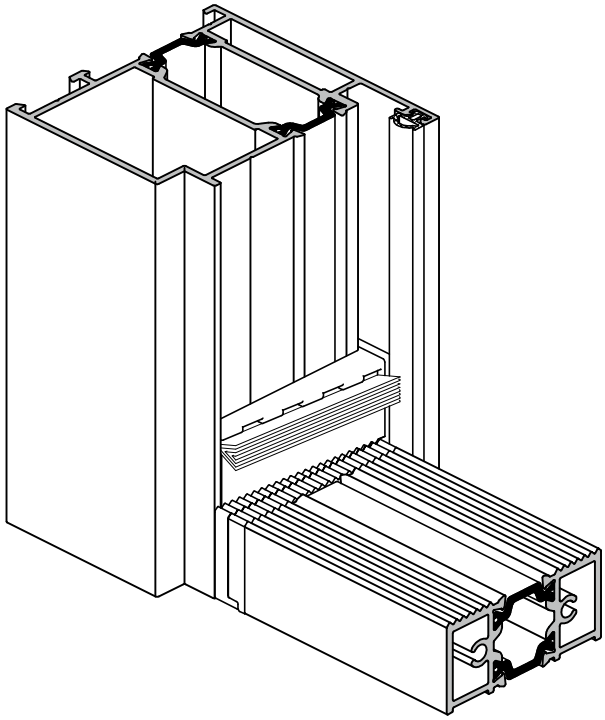

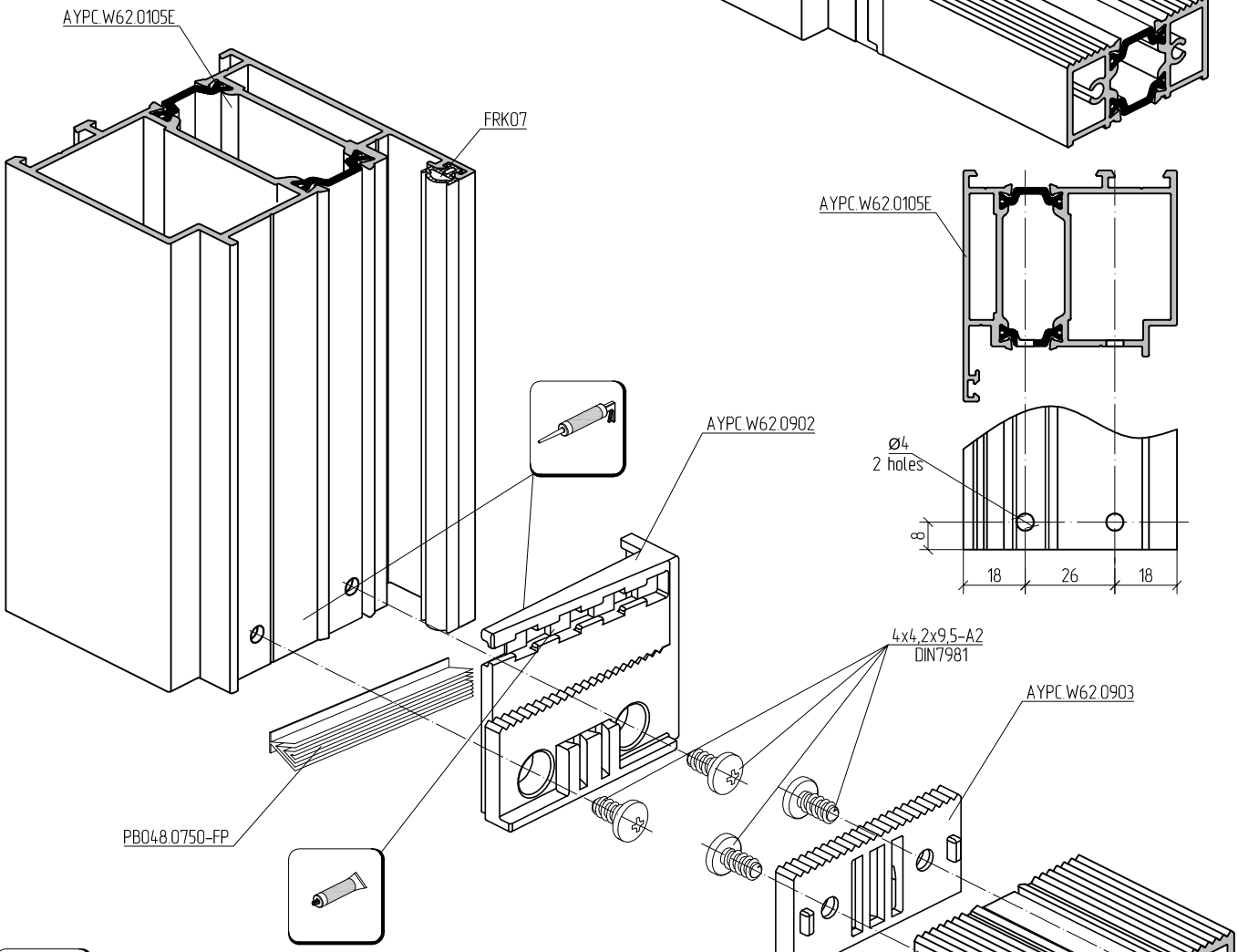

Apply silicone sealant on joint surface.
Sealant composition recommendations on request.

Installation plan of AYPC.W62.0802 threshold on AYPC.W62.0105E profile

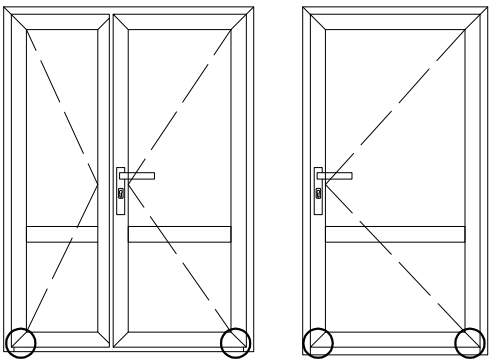

Interior opening

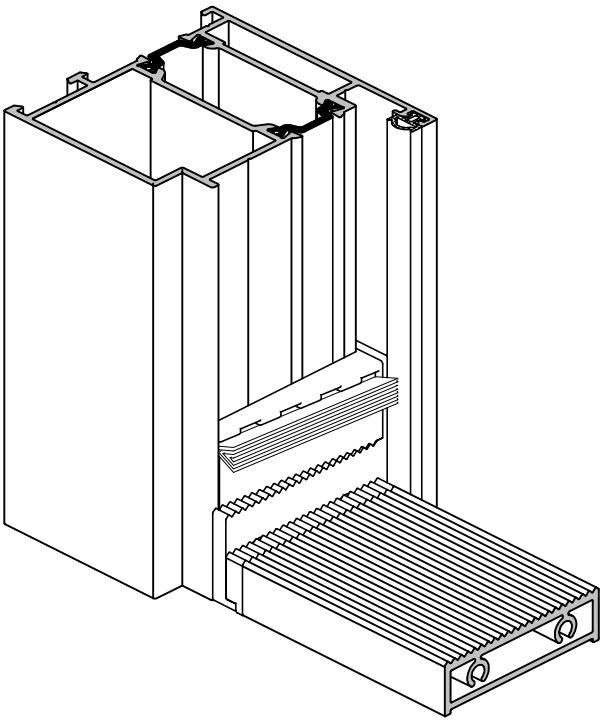

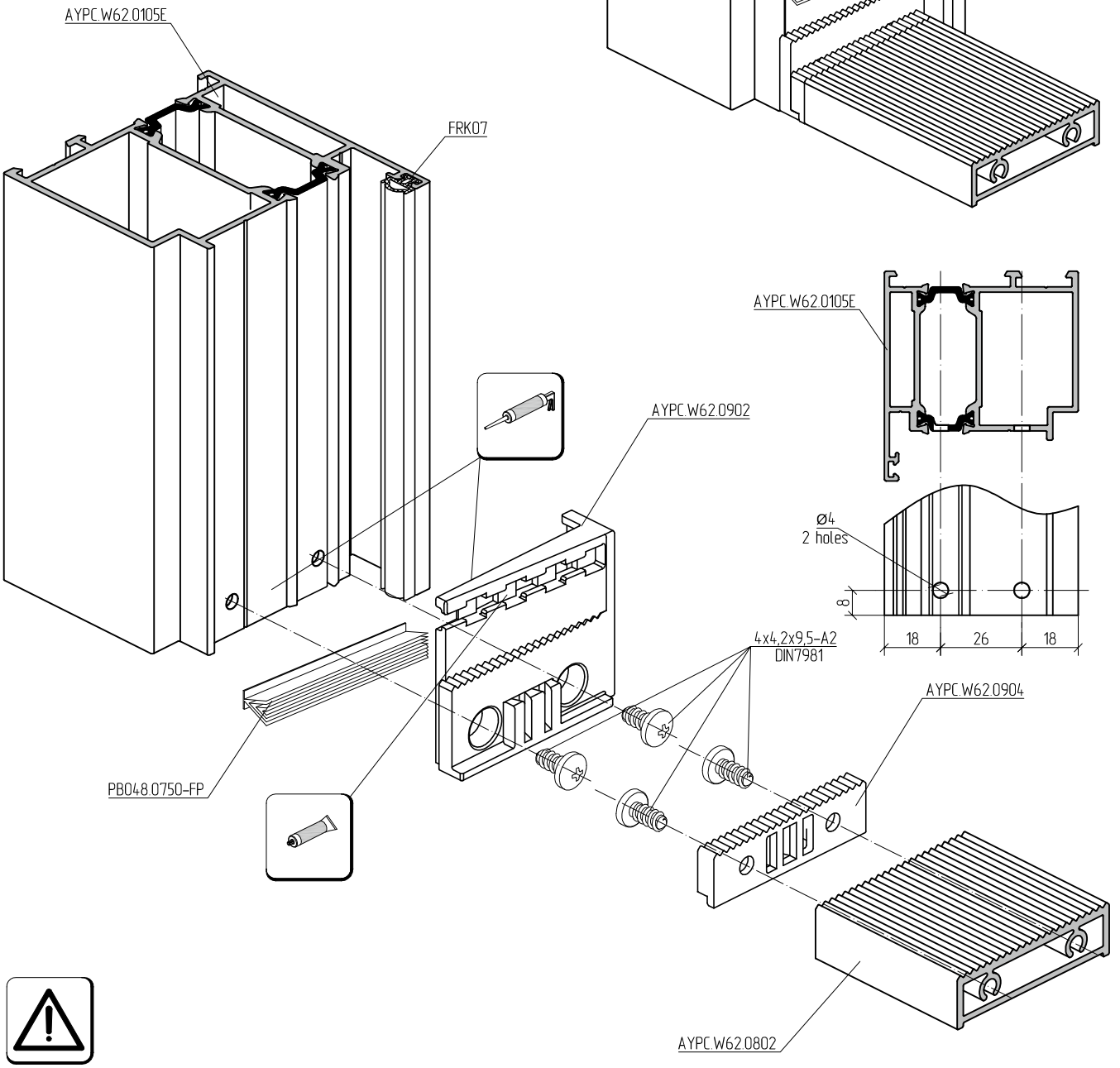

Apply silicone sealant on joint surface.
Sealant composition recommendations on request.

Installation plan of AYPC W62 0801E threshold on AYPC W62 0805E profile

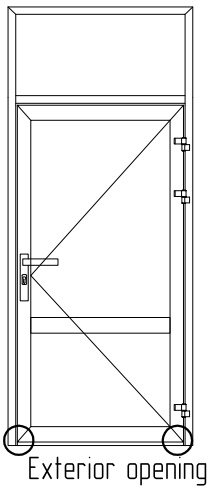

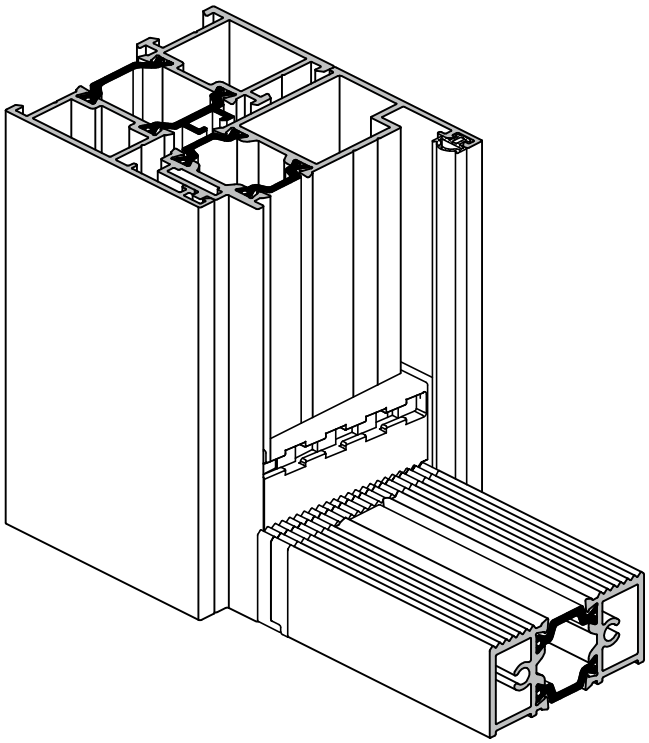

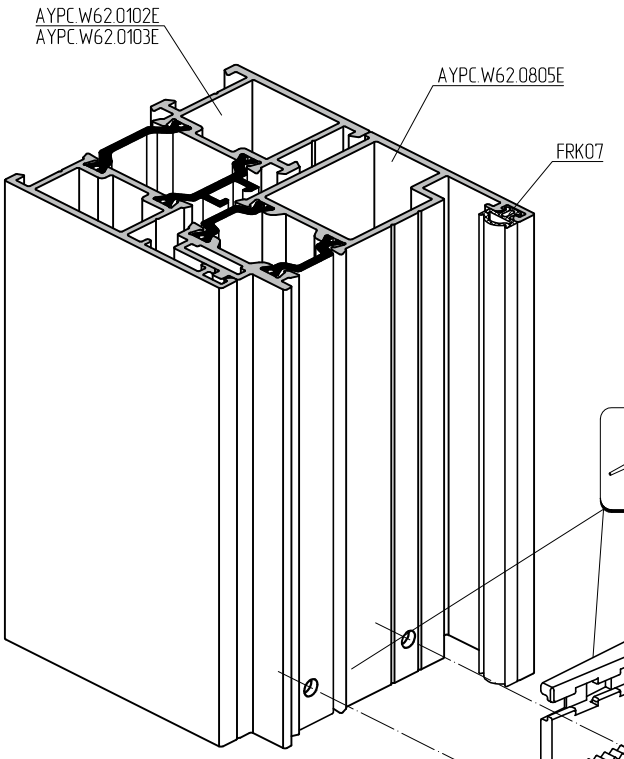

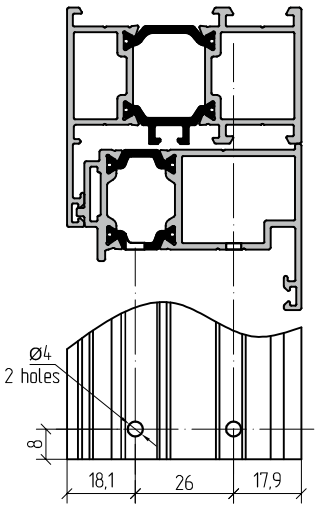

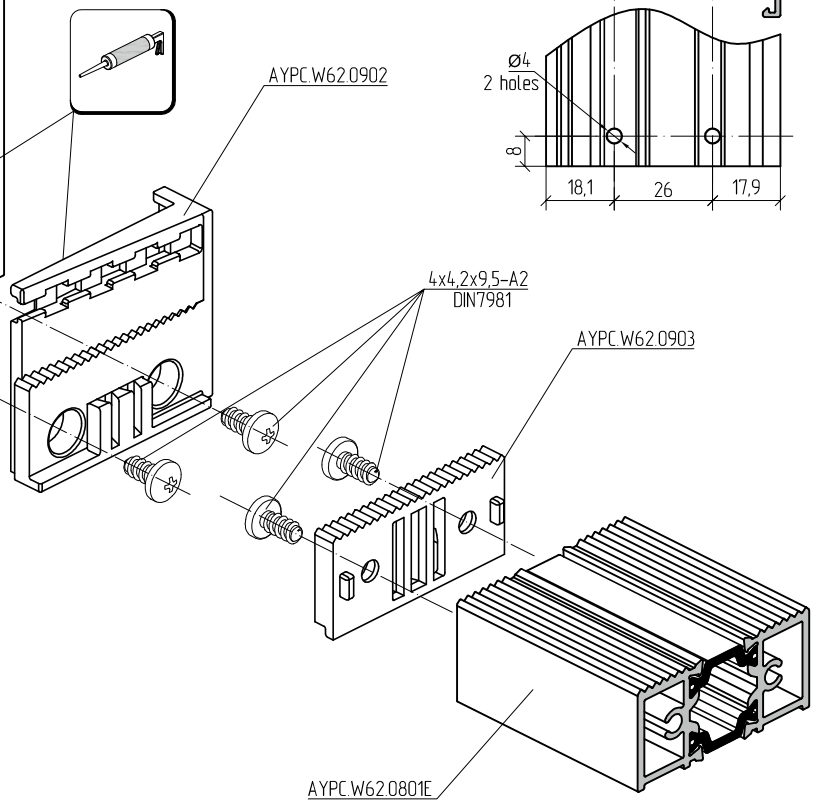

Apply silicone sealant on joint surface.
Sealant composition recommendations on request.

Installation plan of AYPC.W62.0802 threshold on AYPC.W62.0102E (0103E) and AYPC.W62.0805E profile

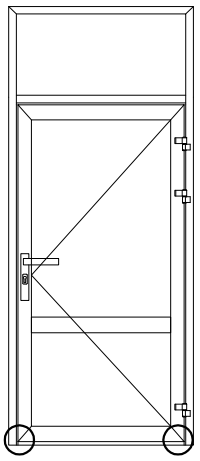

Exterior opening

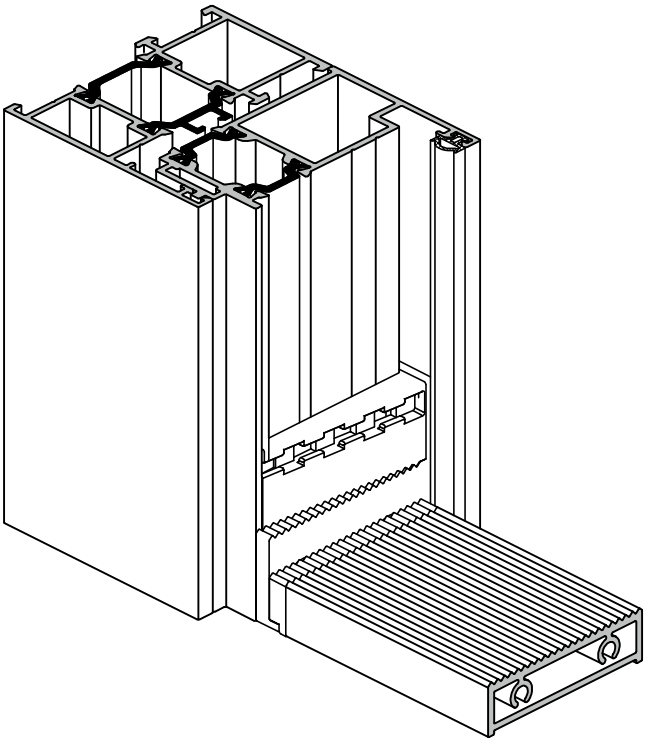

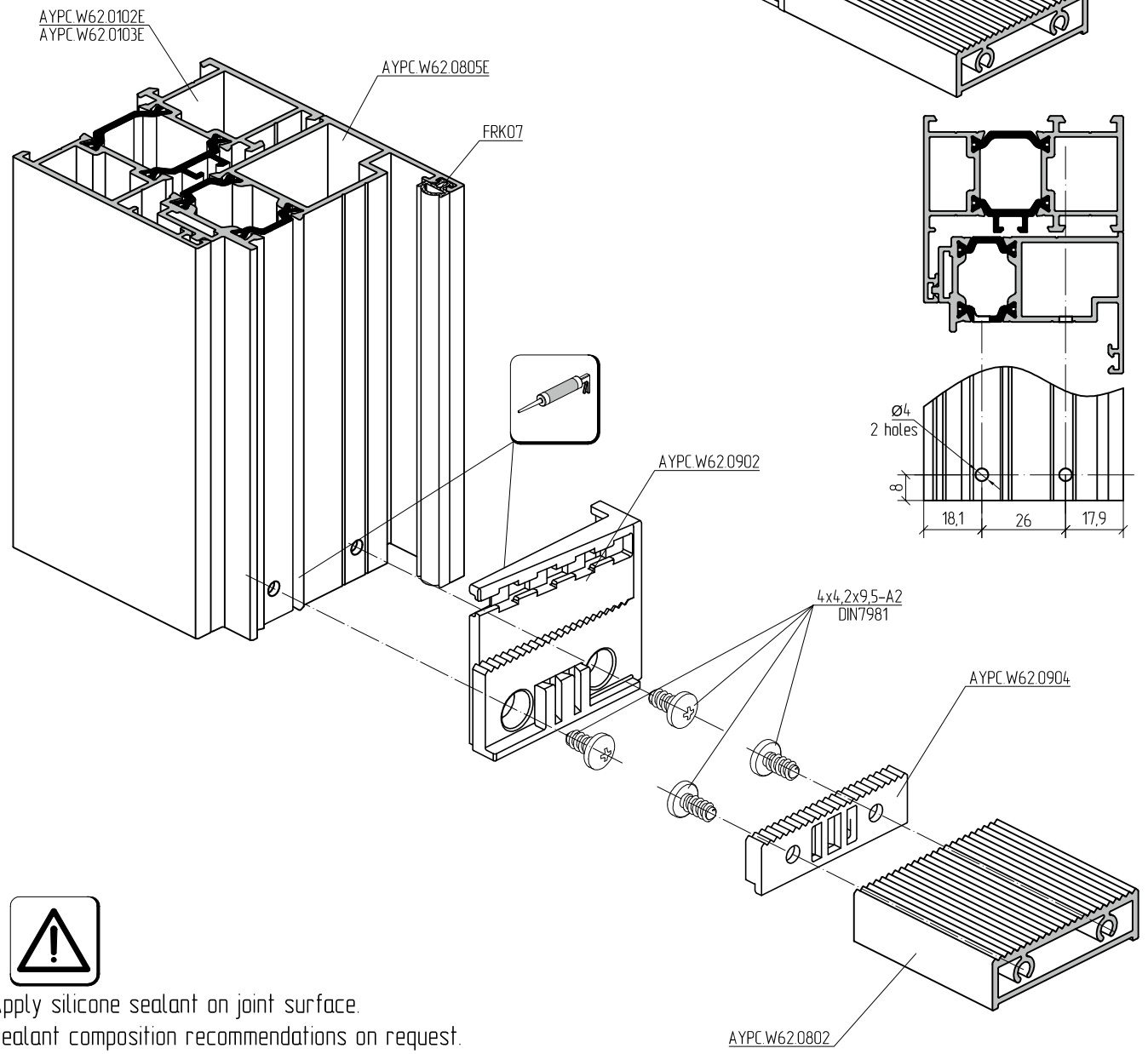

Apply silicone sealant on joint surface.
Sealant composition recommendations on request.

Installation plan of AYPC.W62.0801E threshold on AYPC.W62.0104E and AYPC.W62.0105E profile.

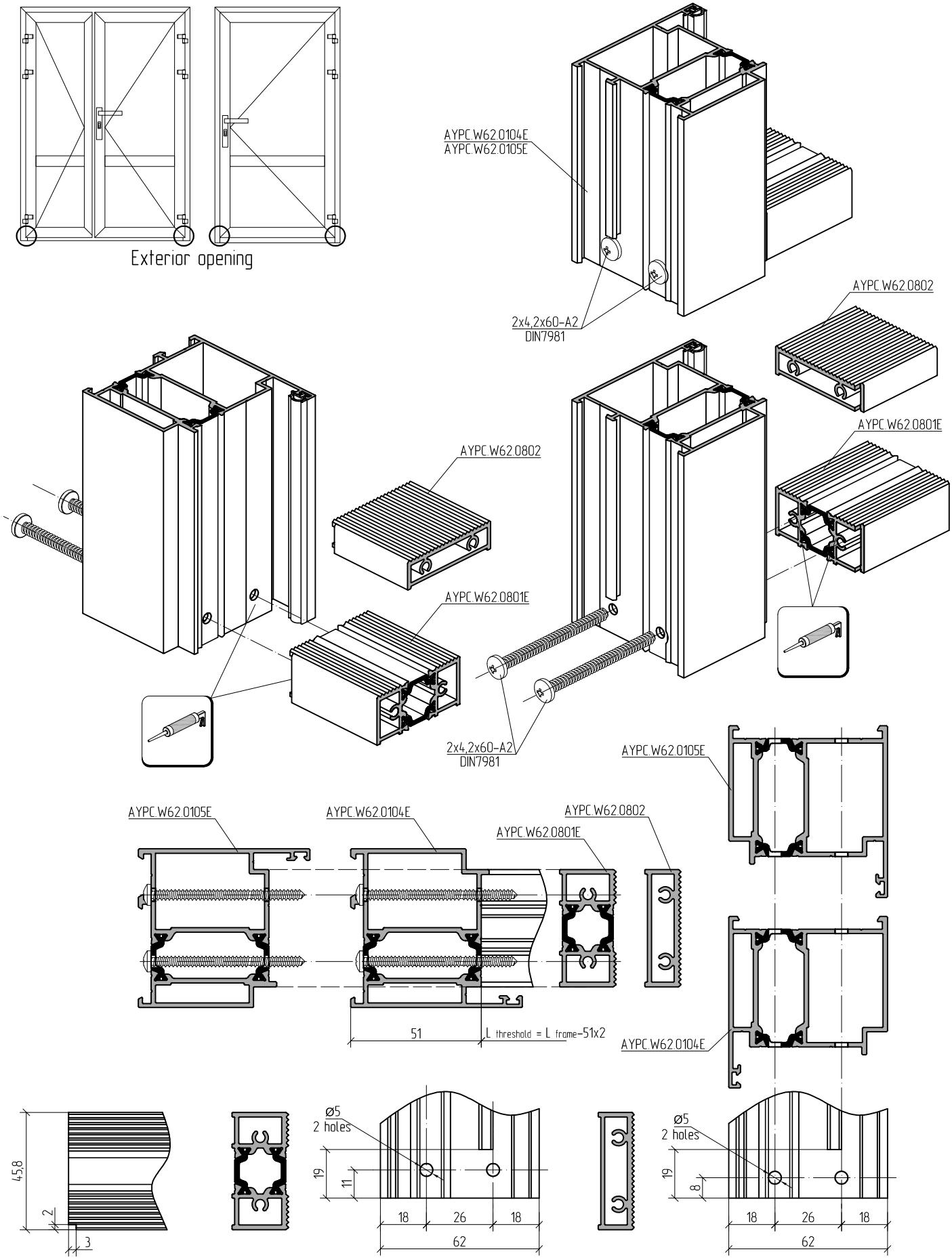

AYPC.W62.0815E profile corner connection by clamping and using 5x10 pins

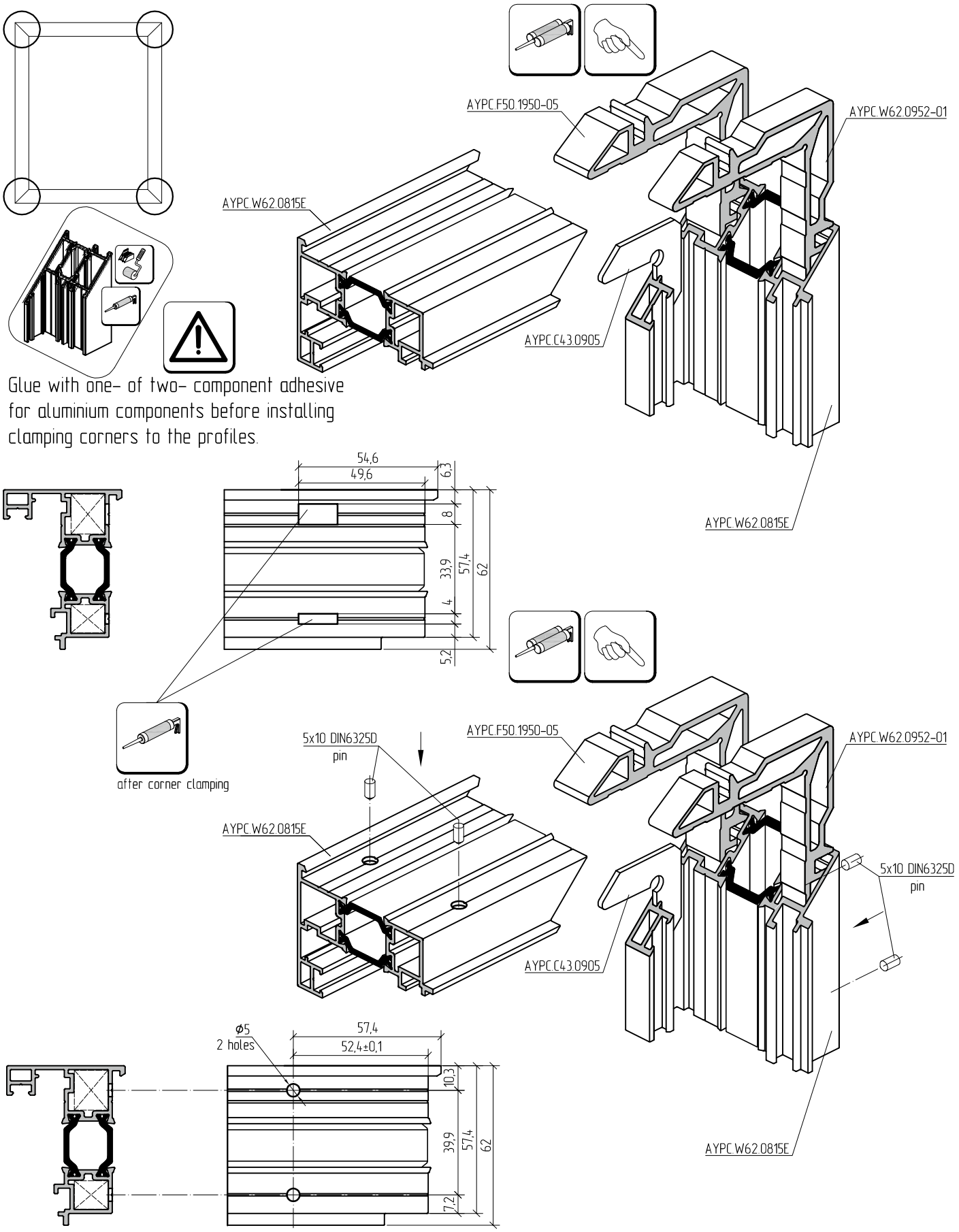

Glue with one- of two- component adhesive for aluminium components before installing clamping corners to the profiles.

Machining of AYPC.W62.0815E for installation of AYPC.W62.0602 glass bead

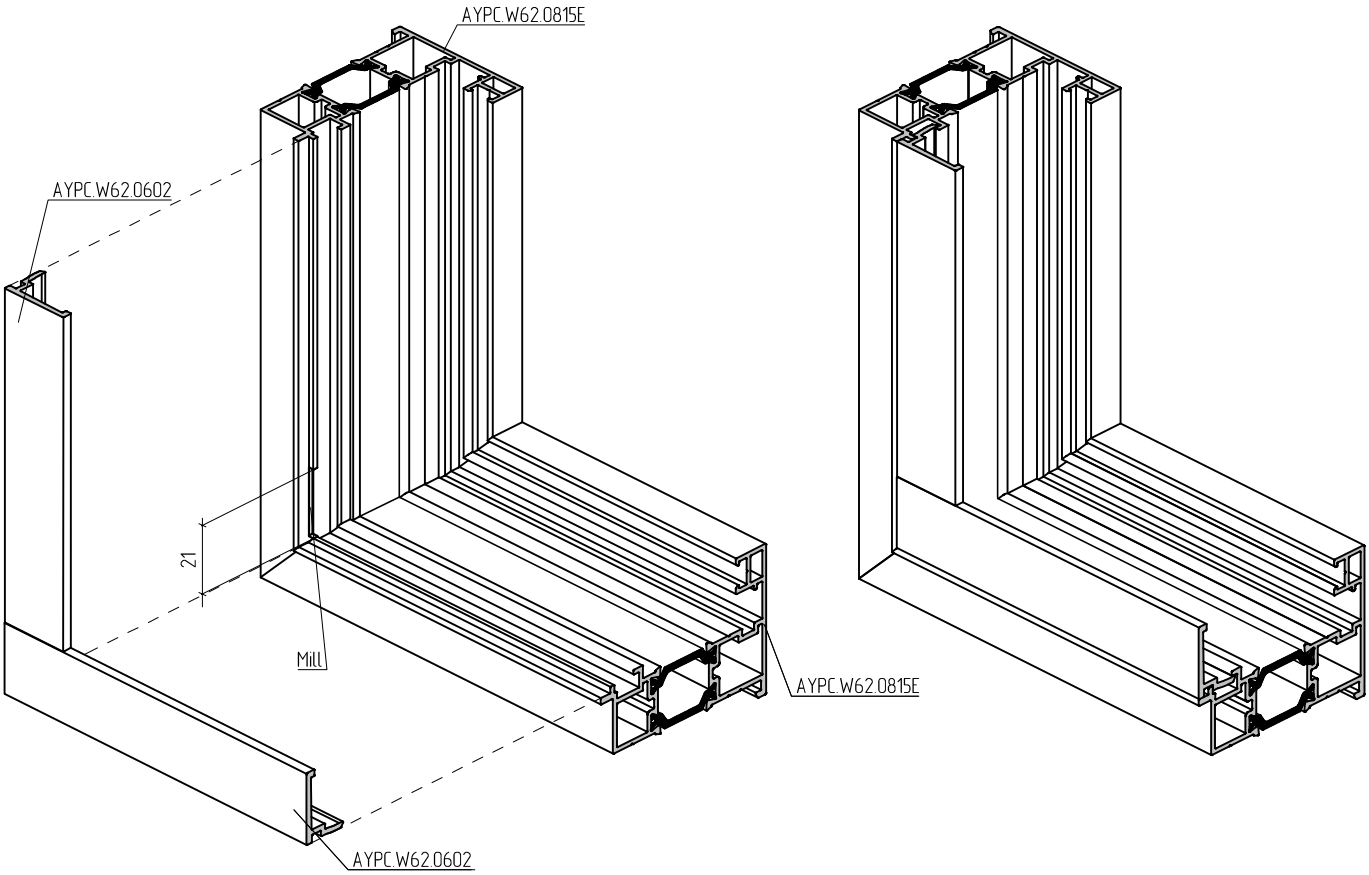

Manchining plan for AYPC.W62.0815E
(only vertical frame profiles machining required)

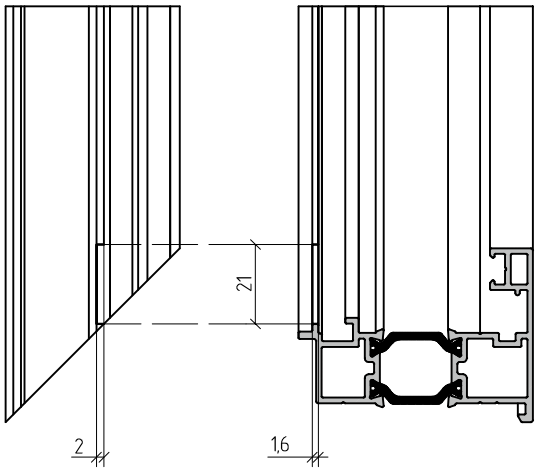

Assemblage and machining of continuous glazing blind part

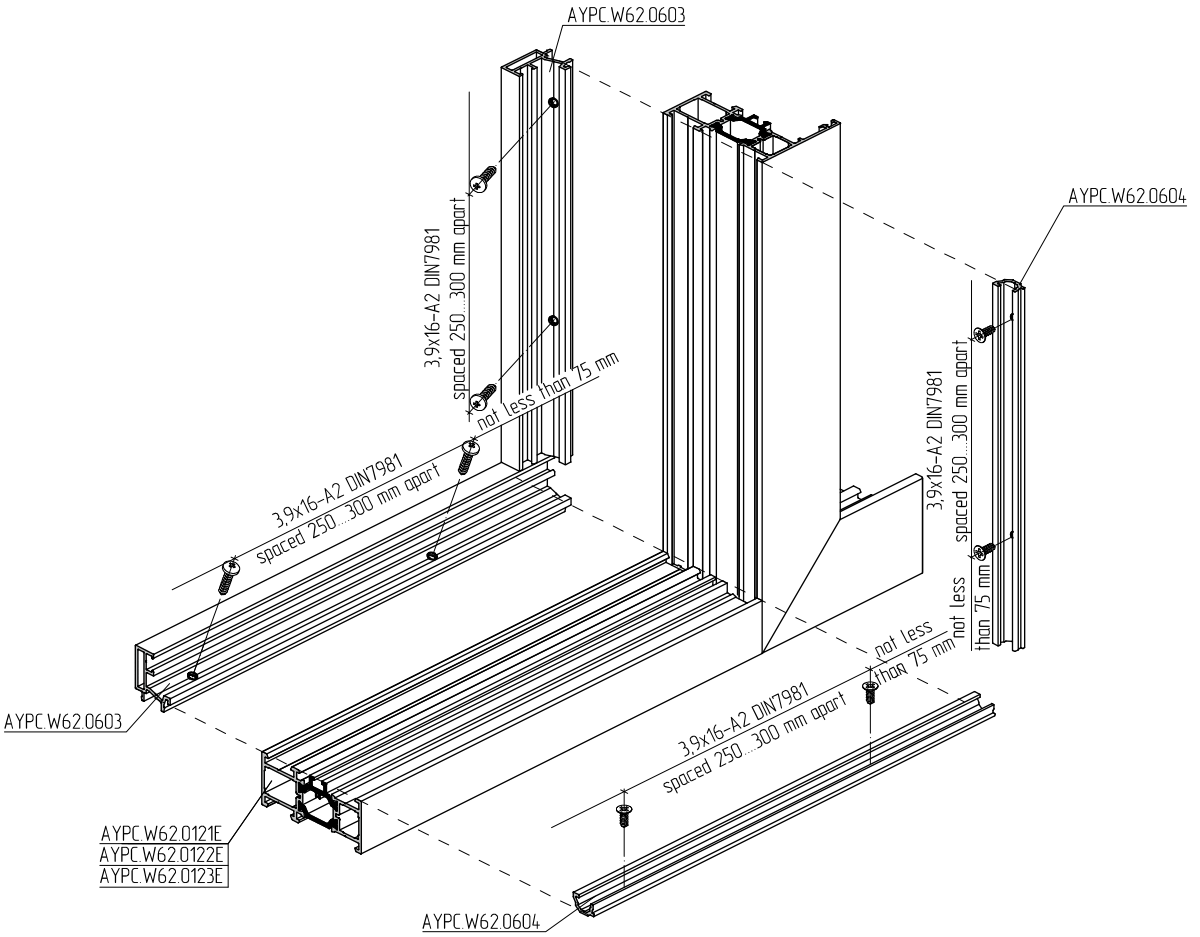

Machining and installation of AYPC.W62.0604 profile
(only for vertical profiles)

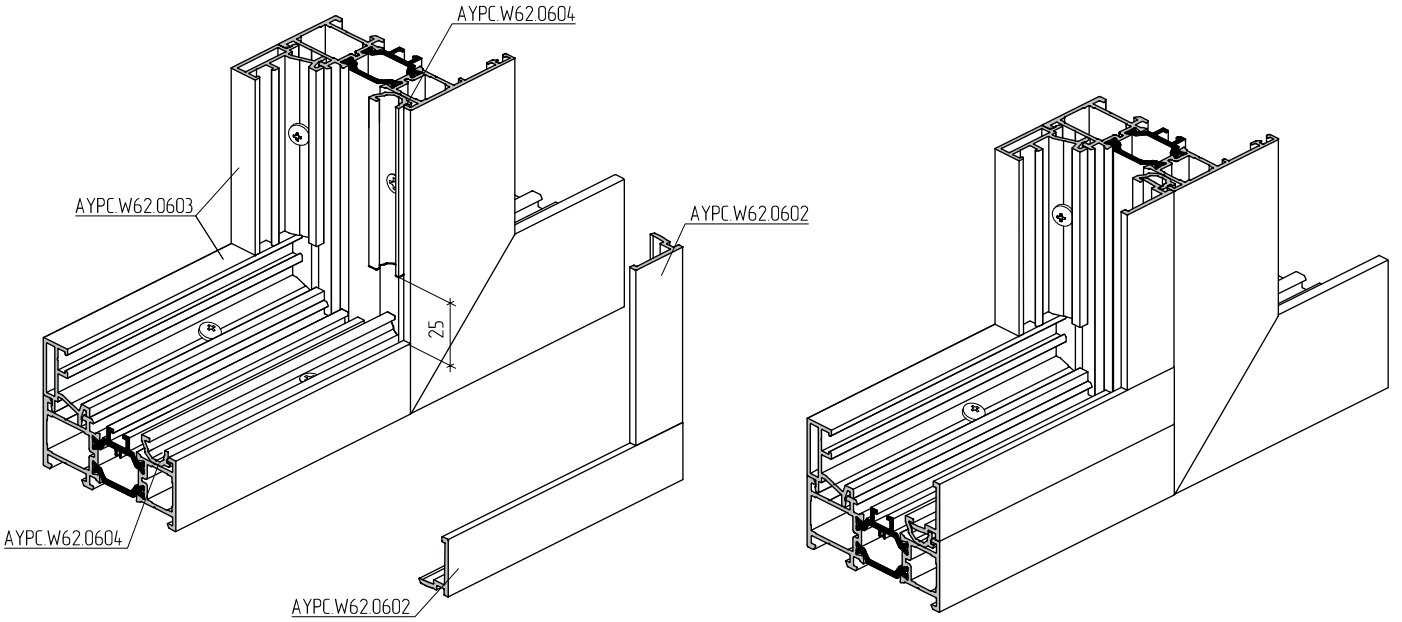

Assemblage and machining of AYPC.W72.0920 for installation to a frame

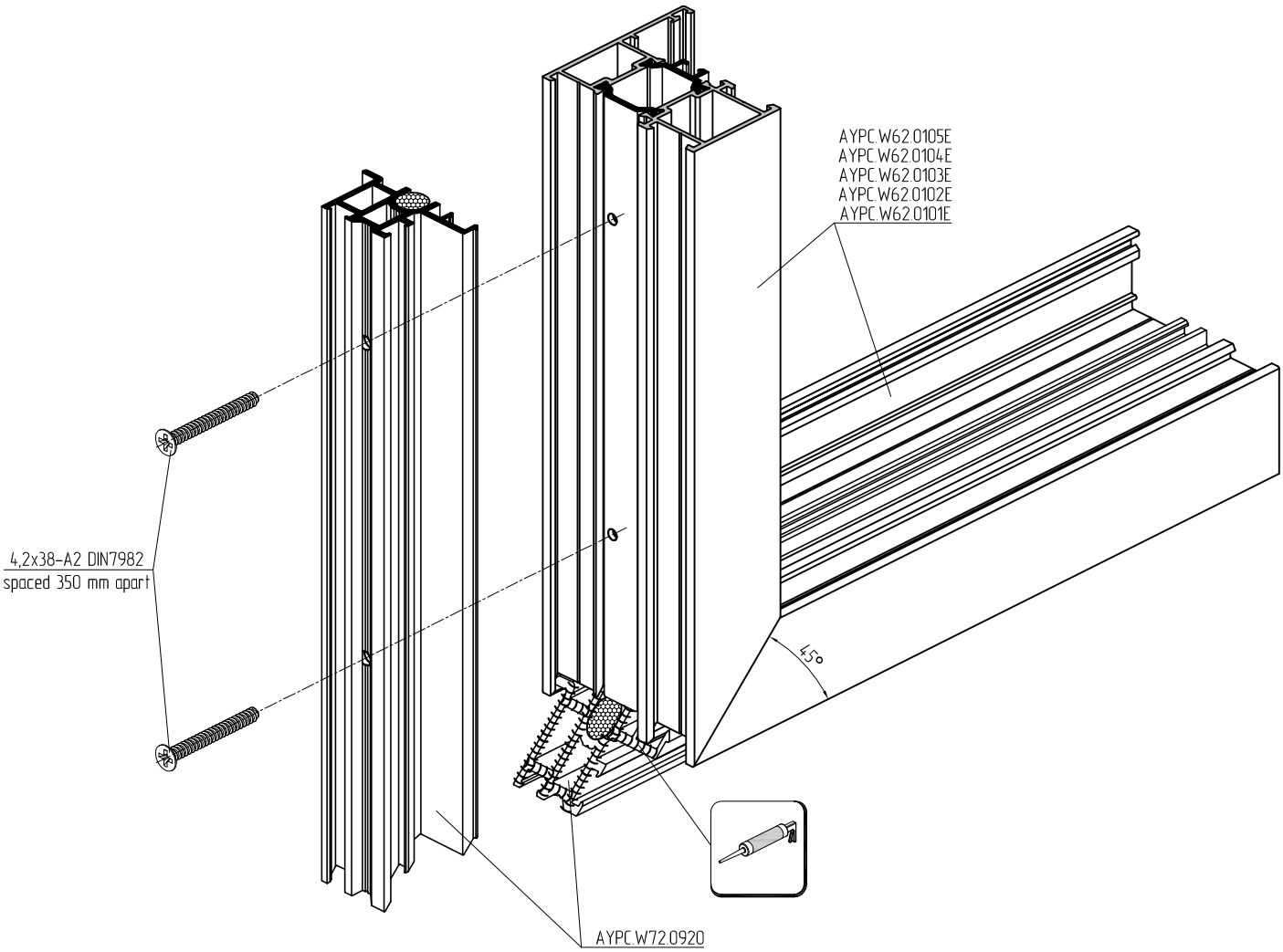

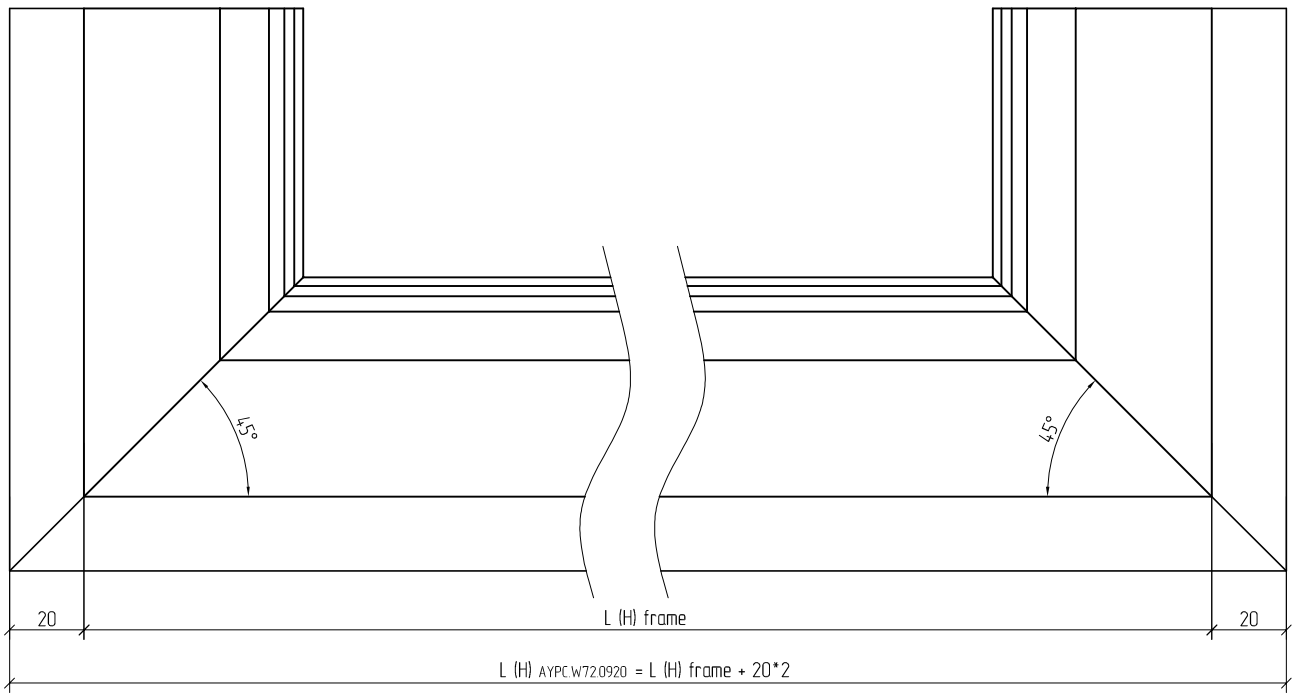

Use of jigs for holes drilling

	Profile	Connecting element		Jig	Holes positioning	Machining example	Application
		ext. chamber	int. chamber				
Angle connection	AYPC.W62.0101E	AYPC.W62.0952-01	AYPC.W62.0952-02	AYPC.W62.1900	1	pag. 10.01	pag. 10.85
	AYPC.W62.0102E	AYPC.W62.0953-01	AYPC.W62.0953-02	AYPC.W62.1900	2	pag. 10.02	pag. 10.86
	AYPC.W62.0103E	AYPC.W62.0954-02	AYPC.W62.0954-03	AYPC.W62.1900	2	pag. 10.02	pag. 10.86
	AYPC.W62.0104E	AYPC.W62.0954	AYPC.W62.0954-01	AYPC.W62.1910	-	pag. 10.13	pag. 10.87
	AYPC.W62.0105E	AYPC.W62.0954	AYPC.W62.0954-01	AYPC.W62.1910	-	pag. 10.15	pag. 10.88
	AYPC.W62.0106E	AYPC.W62.0955	AYPC.W62.0955-01	AYPC.W62.1900	2	pag. 10.03	pag. 10.86
	AYPC.W62.0201E	AYPC.W62.0952	AYPC.W62.0952-03	AYPC.W62.1920	-	pag. 10.07	pag. 10.89
	AYPC.W62.0202E	AYPC.W62.0953	AYPC.W62.0953-03	AYPC.W62.1920	-	pag. 10.07	pag. 10.89
	AYPC.W62.0203E	AYPC.W62.0954-04	AYPC.W62.0954-05	AYPC.W62.1920	-	pag. 10.07	pag. 10.89
	AYPC.W62.0204E	AYPC.W62.0954	AYPC.W62.0955-02	AYPC.W62.1930	1	pag. 10.16	pag. 10.90
	AYPC.W62.0205E	AYPC.W62.0954	AYPC.W62.0955-02	AYPC.W62.1930	2	pag. 10.17	pag. 10.91
	AYPC.W62.0211E	AYPC.W62.0952	AYPC.W62.0952-03	-	-	pag. 10.06	-
	AYPC.W62.0212E	AYPC.W62.0953	AYPC.W62.0953-03	-	-	pag. 10.06	-
	AYPC.W62.0214E	AYPC.W62.0954	AYPC.W62.0955-02	AYPC.W62.1930	1	pag. 10.16	pag. 10.90
	AYPC.W62.0215E	AYPC.W62.0954	AYPC.W62.0955-02	AYPC.W62.1930	2	pag. 10.17	pag. 10.91
	AYPC.W62.0221E	AYPC.W62.0952	AYPC.W62.0952-03	AYPC.W62.1920	-	pag. 10.07	pag. 10.89
	AYPC.W62.0222E	AYPC.W62.0953	AYPC.W62.0953-03	AYPC.W62.1920	-	pag. 10.07	pag. 10.89
	AYPC.W62.0223E	AYPC.W62.0954-04	AYPC.W62.0954-05	AYPC.W62.1920	-	pag. 10.07	pag. 10.89
	AYPC.W62.0301E	AYPC.W62.0952-01	AYPC.W62.0952-02	AYPC.W62.1900	1	pag. 10.09	pag. 10.85
	AYPC.W62.0302E	AYPC.W62.0953-01	AYPC.W62.0953-02	AYPC.W62.1900	2	pag. 10.10	pag. 10.86
	AYPC.W62.0303E	AYPC.W62.0954-02	AYPC.W62.0954-03	AYPC.W62.1900	2	pag. 10.10	pag. 10.86
	AYPC.W62.0102E	AYPC.W62.0953-01	AYPC.W50.0931	AYPC.W62.1900	2	pag. 10.02	pag. 10.86
	AYPC.W62.0302E	AYPC.W62.0953-01	AYPC.W50.0931	AYPC.W62.1900	2	pag. 10.10	pag. 10.86
	AYPC.W62.0805E	AYPC.W62.0957	AYPC.W62.0953-04	-	-	pag. 10.21	-
	AYPC.W62.0815E	AYPC.W62.0952-01	AYPC.F50.1950-05	-	-	pag. 10.80	-
T-connection	AYPC.W62.0101E	AYPC.W62.0951	AYPC.W62.0951	AYPC.W62.1940	-	pag. 10.52-10.53	pag. 10.92
	AYPC.W62.0102E	AYPC.W62.0951-01	AYPC.W62.0951-01				
	AYPC.W62.0103E	AYPC.W62.0951-02	AYPC.W62.0951-02				
	AYPC.W62.0106E	AYPC.W62.0951-03	AYPC.W62.0951-03			pag. 10.54	
	AYPC.W62.0121E	AYPC.W62.0951	AYPC.W62.0951			pag. 10.56	
	AYPC.W62.0122E	AYPC.W62.0951-01	AYPC.W62.0951-01				
	AYPC.W62.0123E	AYPC.W62.0951-02	AYPC.W62.0951-02				
	AYPC.W62.0301E	AYPC.W62.0951	AYPC.W62.0951			pag. 10.52-10.53	
	AYPC.W62.0302E	AYPC.W62.0951-01	AYPC.W62.0951-01				
	AYPC.W62.0303E	AYPC.W62.0951-02	AYPC.W62.0951-02				
	AYPC.W62.0321E	AYPC.W62.0951	AYPC.W62.0951	-	-	pag. 10.55	-

No jig for machining of AYPC.W62.0211E, AYPC.W62.0212E, AYPC.W62.0321E, AYPC.W62.0805E and AYPC.W62.0815E.

AYPC.W62.1900 jig for holes drilling in AYPC.W62.0101E, AYPC.W62.0301E profiles for 5x10 DIN6325D pins for connecting elements installation

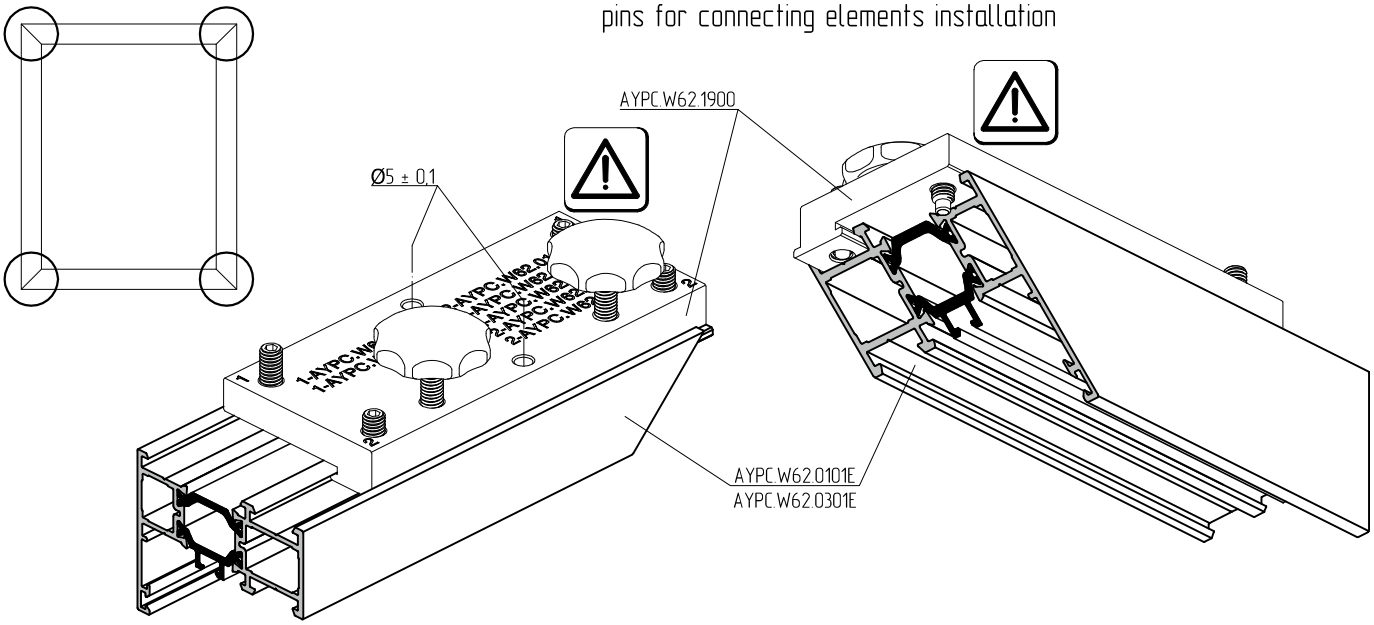

AYPC.W62.1900 jig is positioned using M6x20 DIN915 screw position 1.

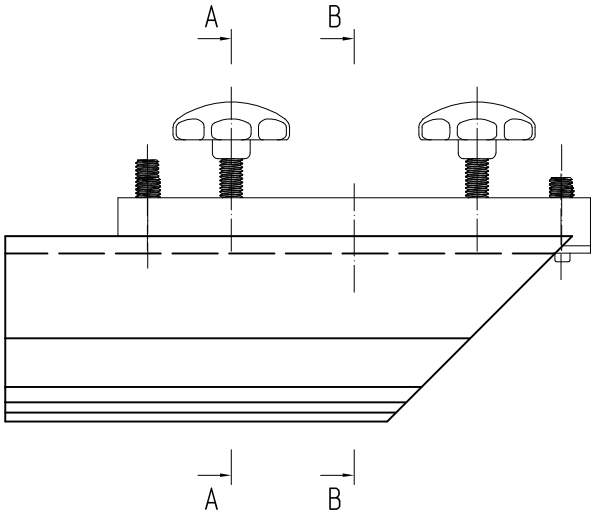

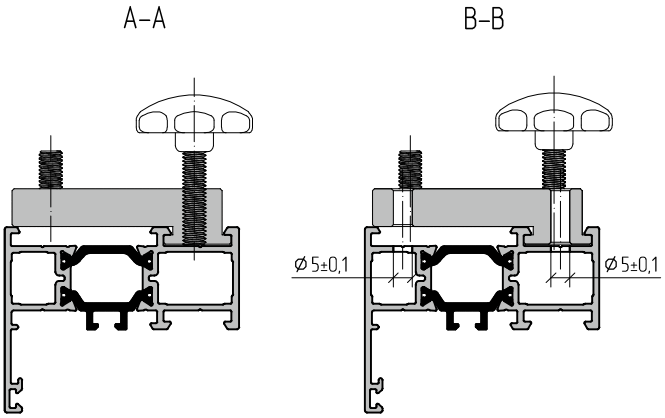

AYPC.W62.1900 jig

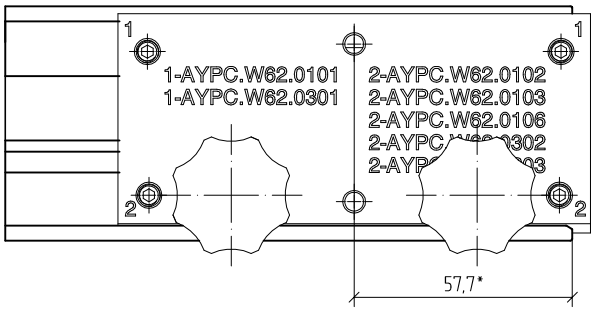

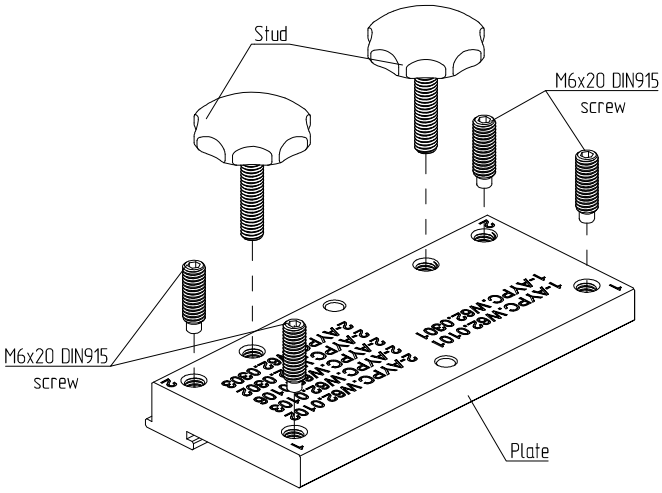

* Dimensions for reference.

AYPC.W62.1900 jig for holes drilling in AYPC.W62.0102E, AYPC.W62.0103E, AYPC.W62.0106E, AYPC.W62.0302E, AYPC.W62.0303E profiles for 5x10 DIN6325D pins for connecting elements installation

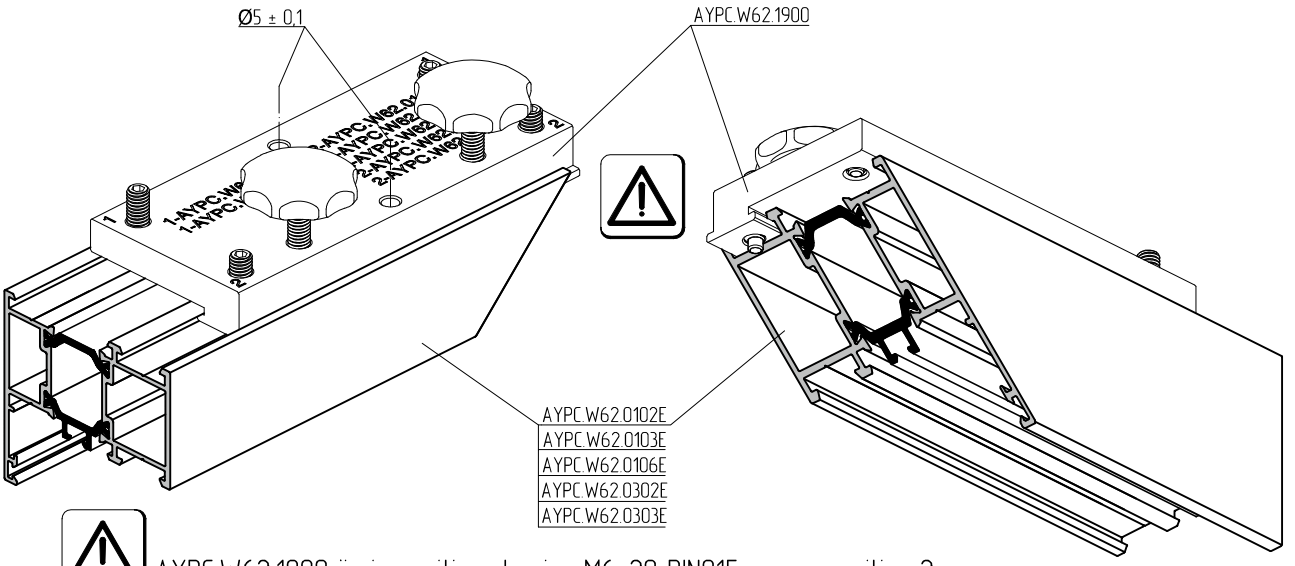

AYPC.W62.1900 jig is positioned using M6x20 DIN915 screw position 2.

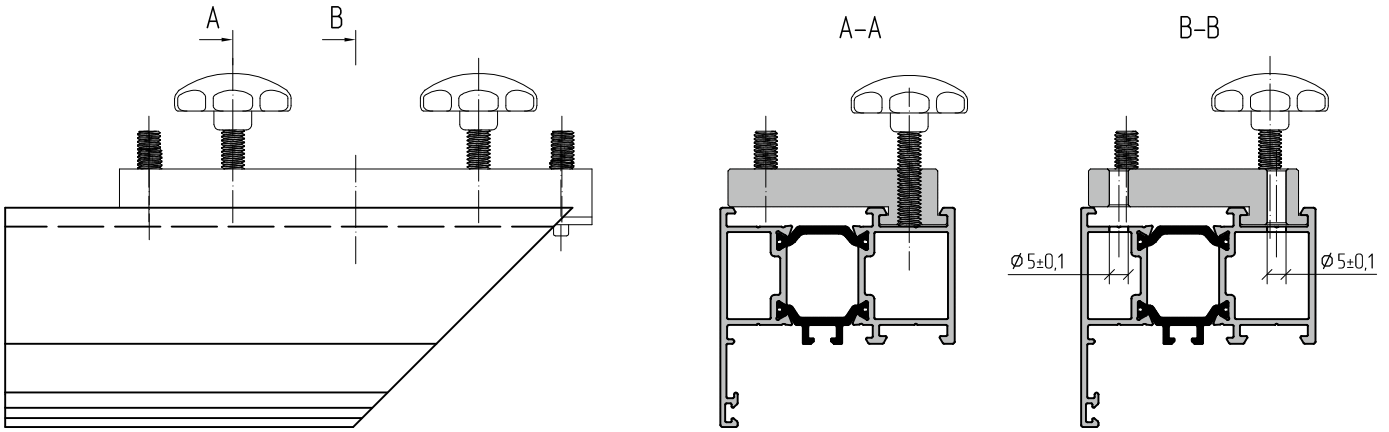

AYPC.W62.1900 jig

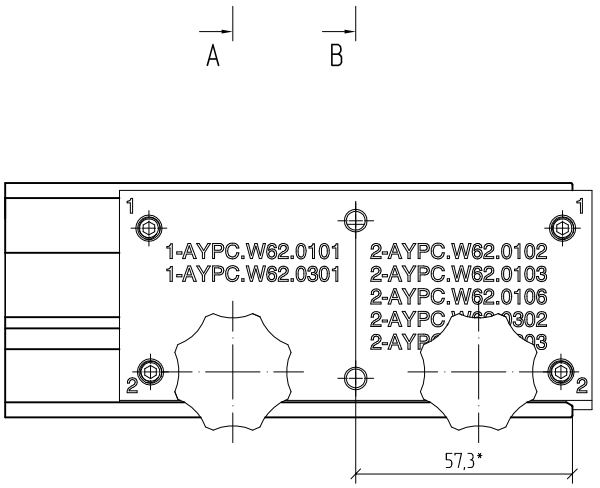

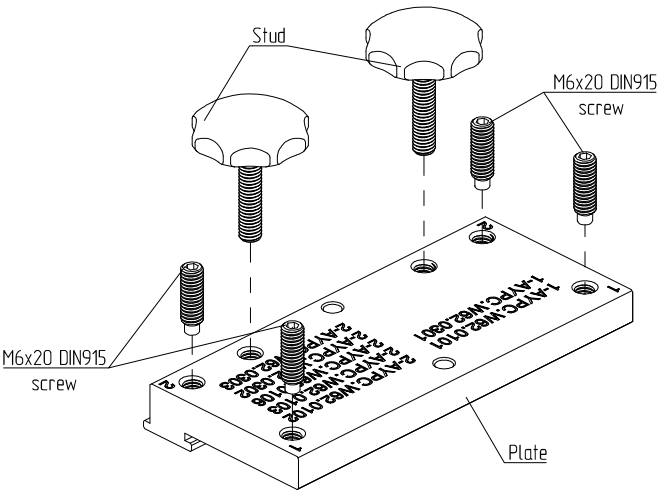

* Dimensions for reference.

AYPC.W62.1910 jig for holes drilling in AYPC.W62.0104 E profile for 5x10 DIN6325D pins for connecting elements installation

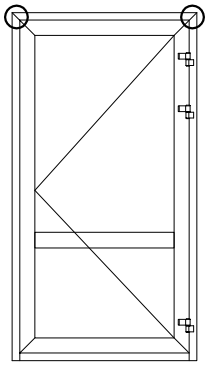

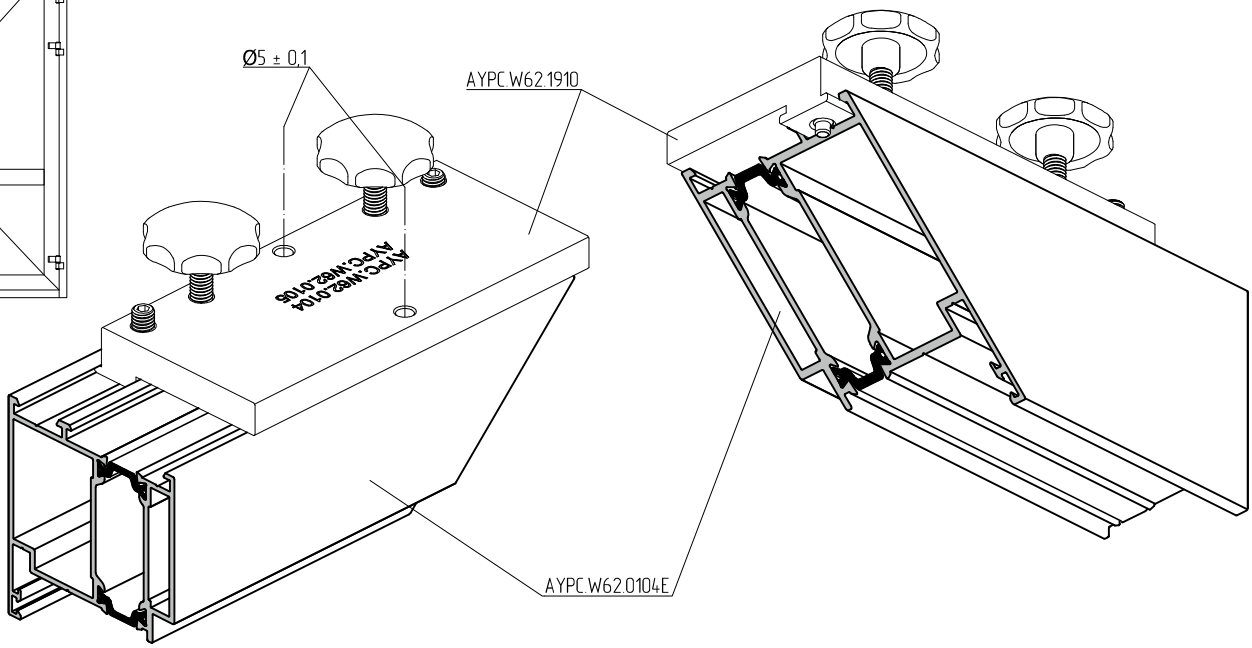

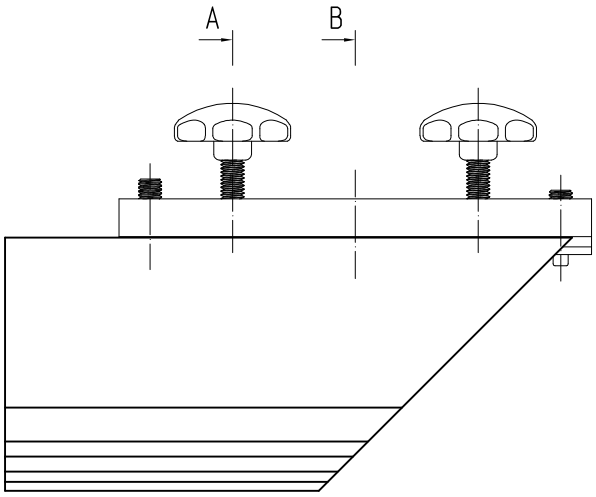

A–A

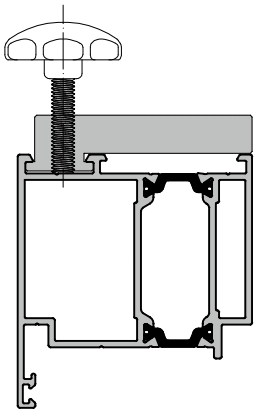

B–B

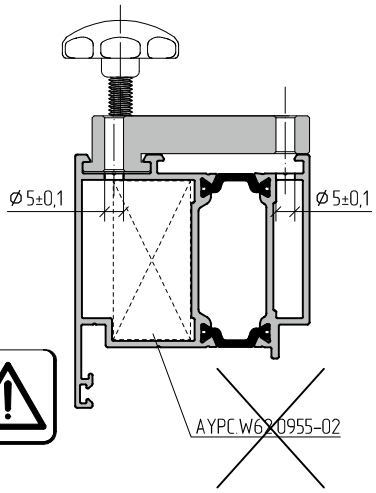

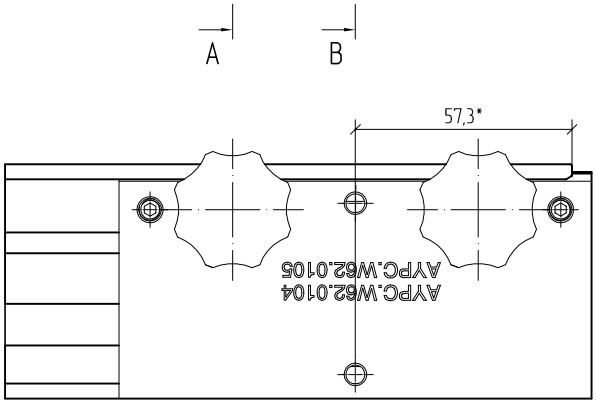

AYPC.W62.1910 jig

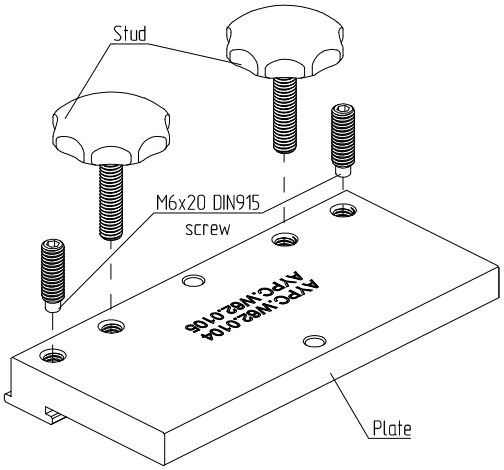

* Dimensions for reference.
Is not for AYPC.W62.0955-02 connecting element.
2 options are available when machining on punching machines.

AYPC.W62.1910 jig for holes drilling in AYPC.W62.0105E profile for 5x10 DIN6325D pins for connecting elements installation

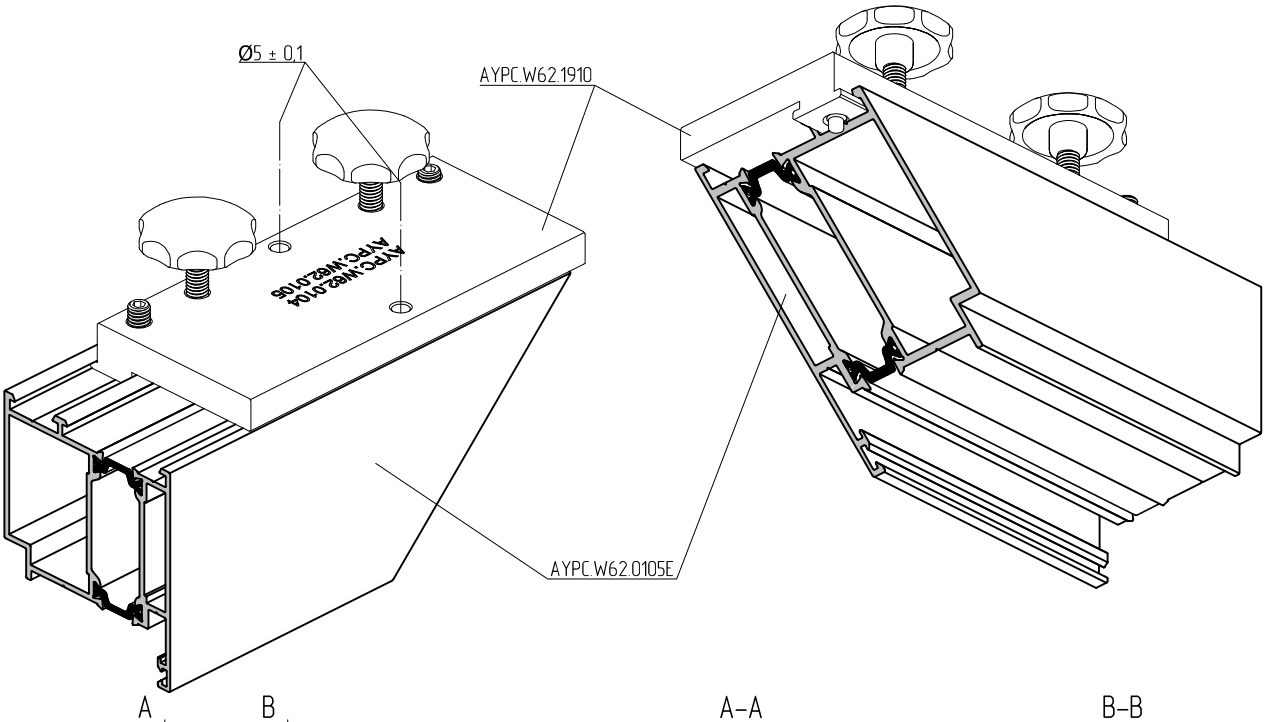

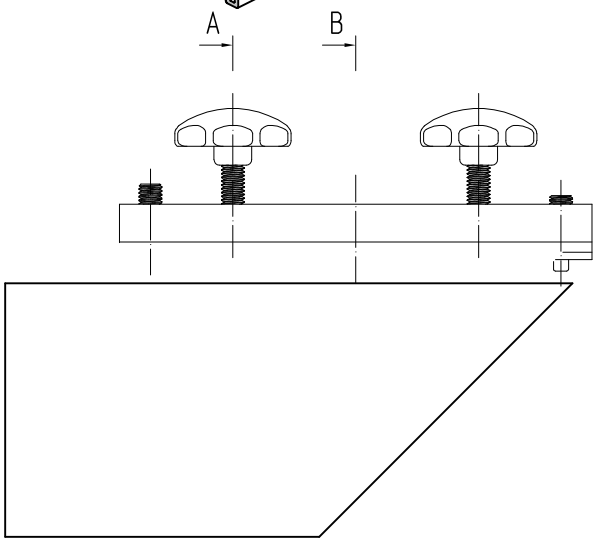

A–A

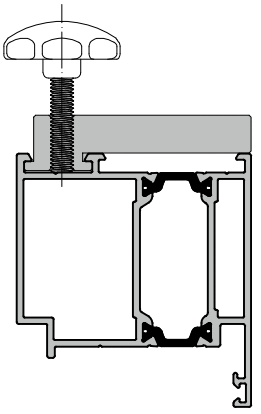

B–B

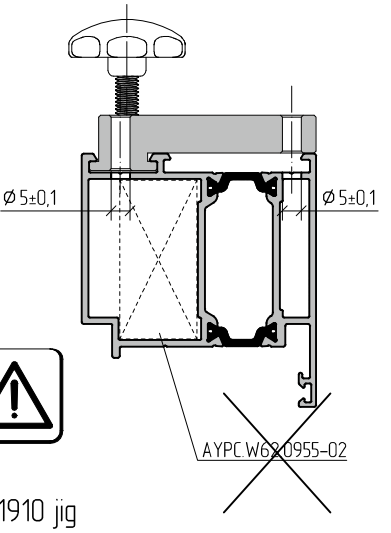

AYPC.W62.1910 jig

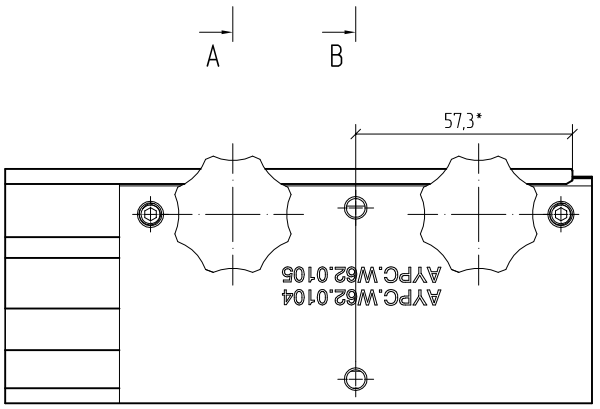

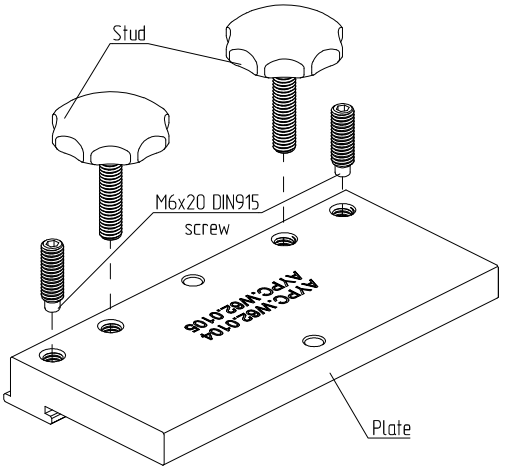

* Dimensions for reference.
Is not for AYPC.W62.0955-02 connecting element.
2 options are available when machining on punching machines.

AYPC.W62.1920 jig for holes drilling in AYPC.W62.0201E, AYPC.W62.0202E and other profiles for 5x10 DIN6325D pins for connecting elements installation

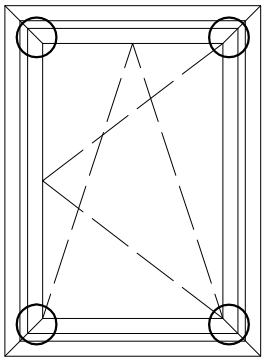

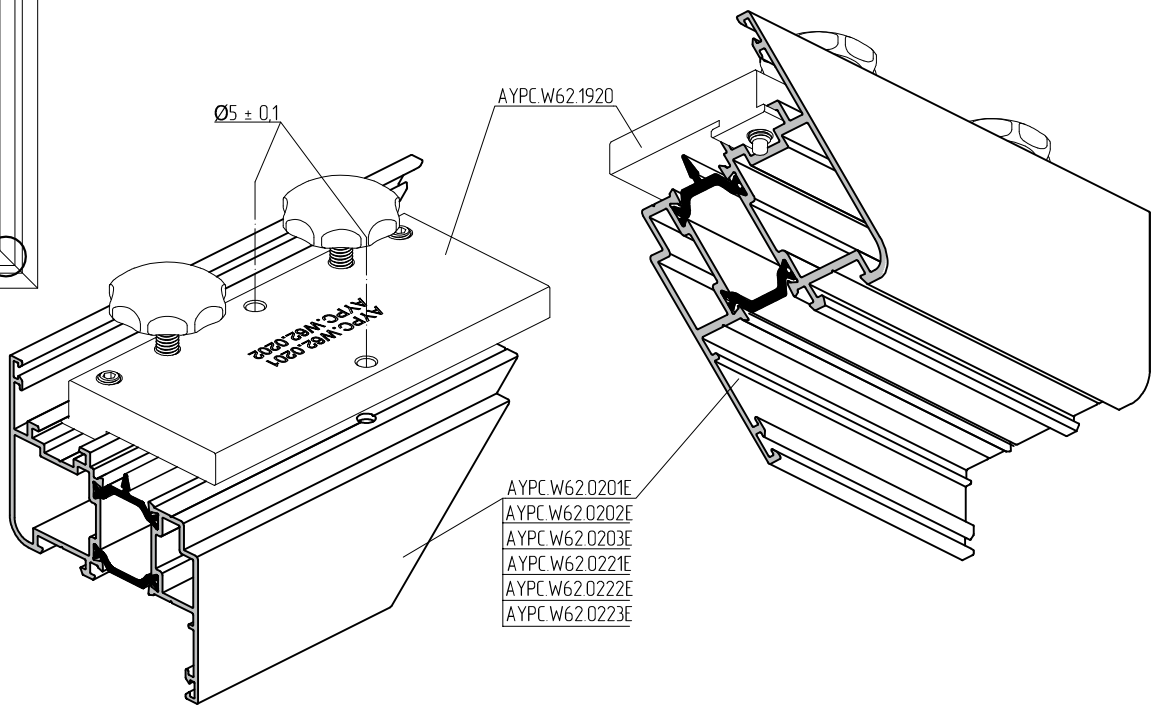

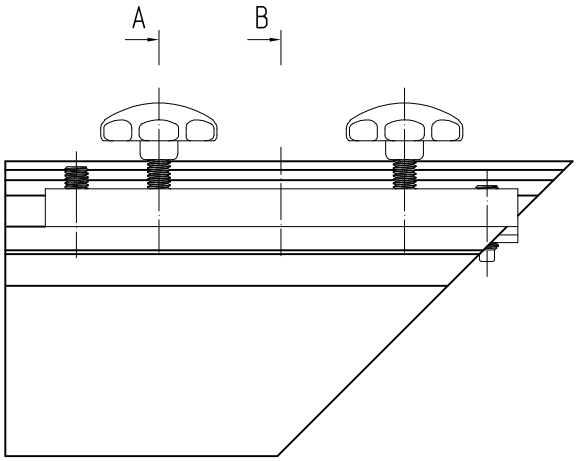

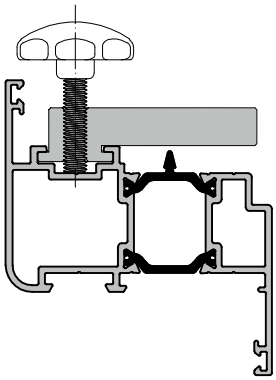

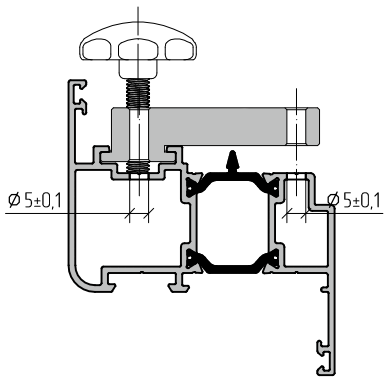

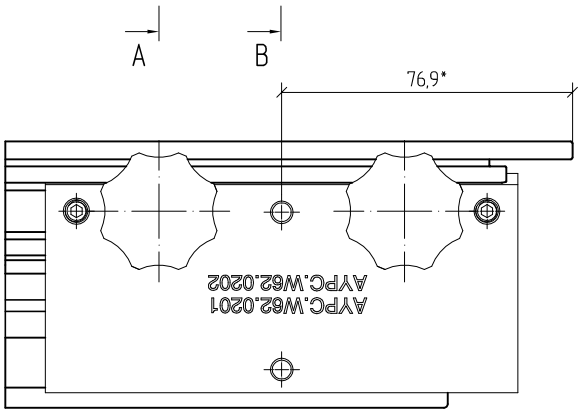

AYPC.W62.1920 jig

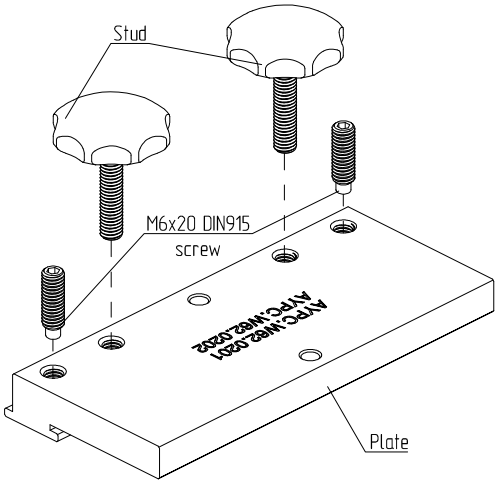

* Dimensions for reference.

AYPC.W62.1930 jig for holes drilling in AYPC.W62.0204E and AYPC.W62.0214E profiles for 5x10 DIN6325D pins for connecting elements installation

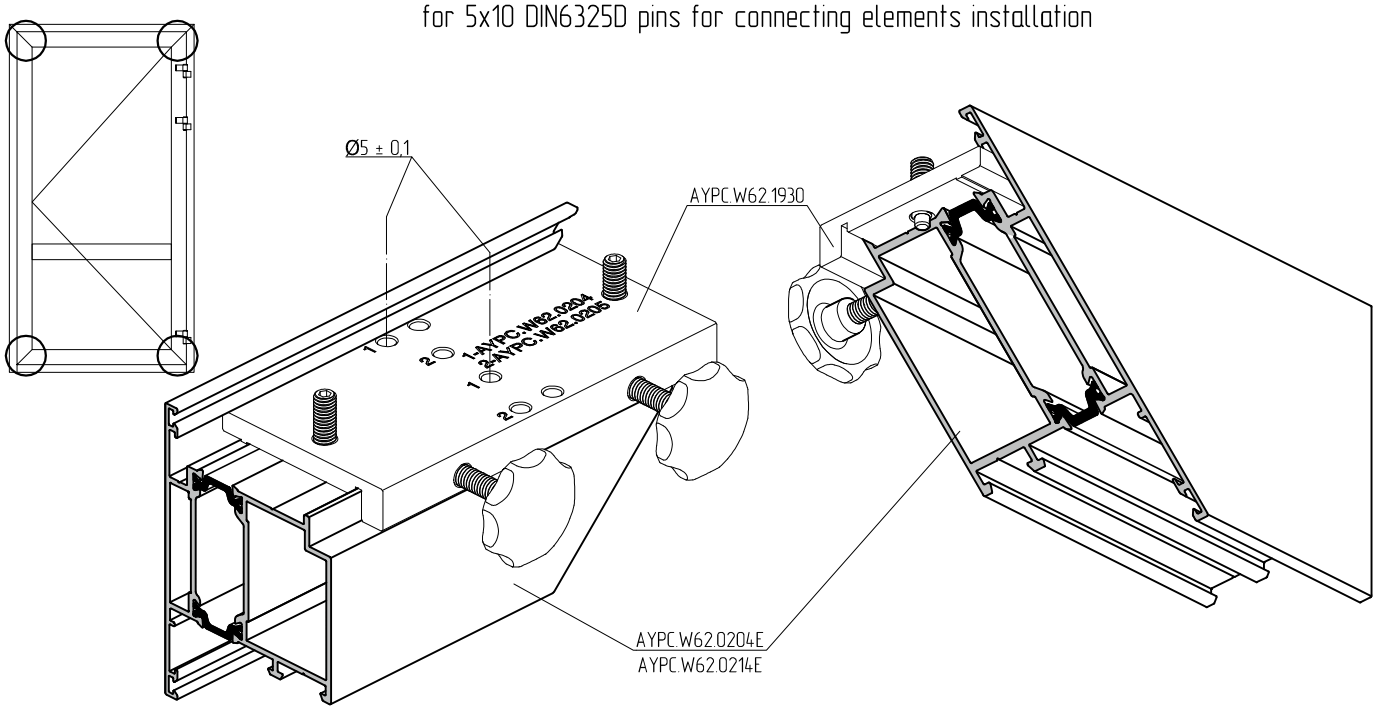

A–A

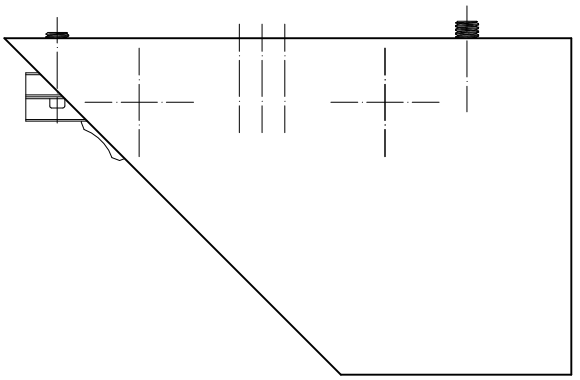

B–B

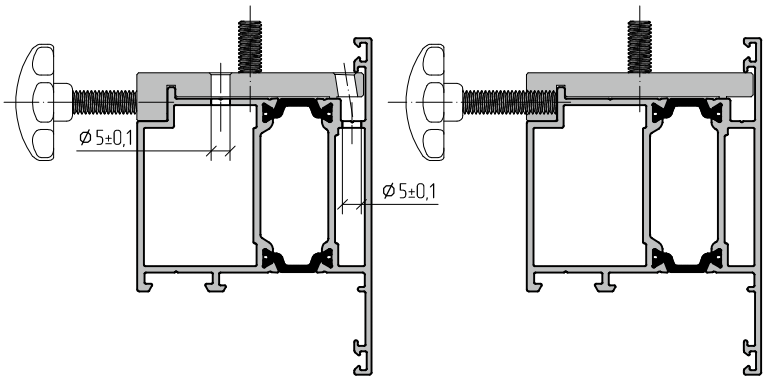

A B

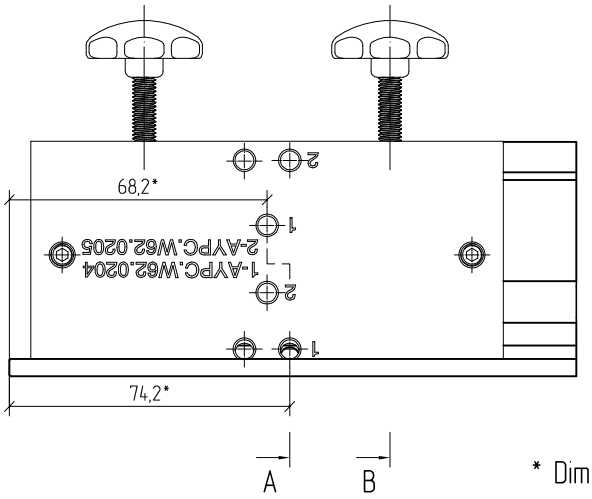

AYPC.W62.1930 jig

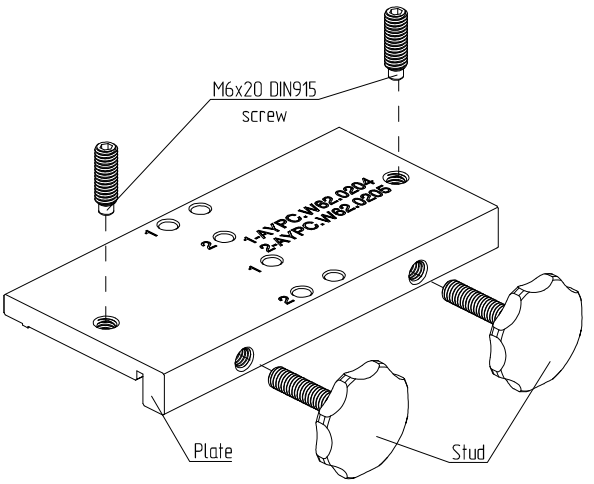

* Dimensions for reference.

AYPC.W62.1930 jig for holes drilling in AYPC.W62.0205E and AYPC.W62.0215E profiles for 5x10 DIN6325D pins for connecting elements installation

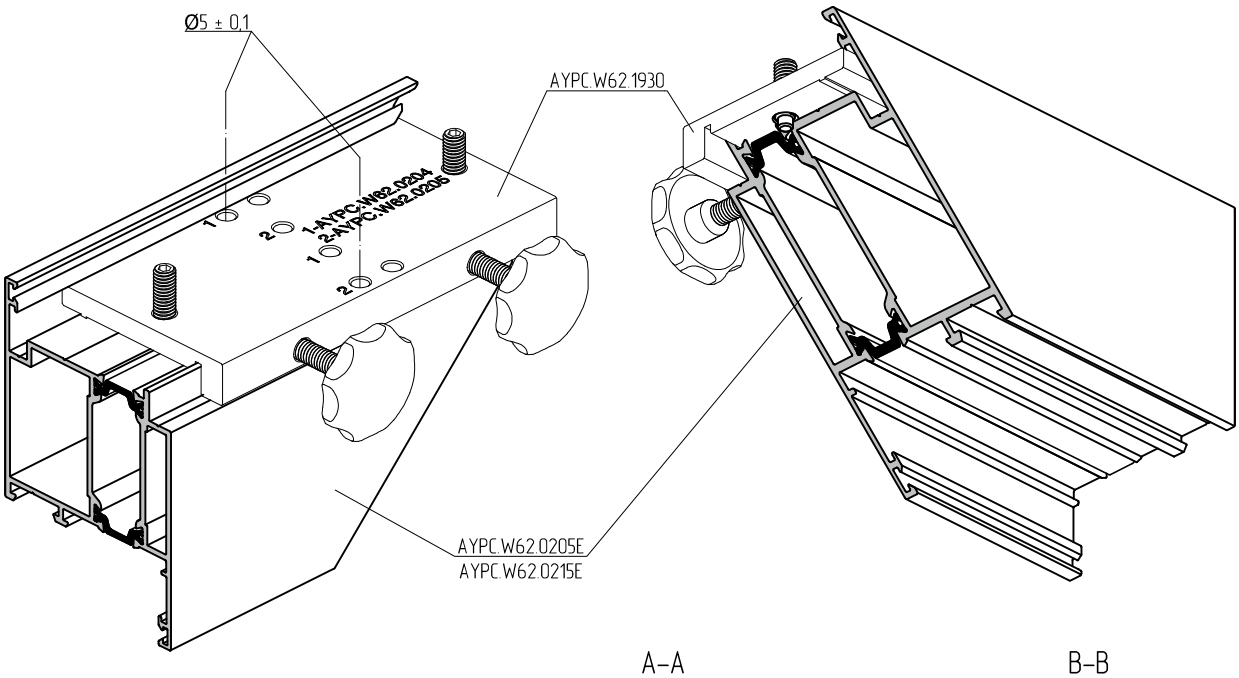

A–A

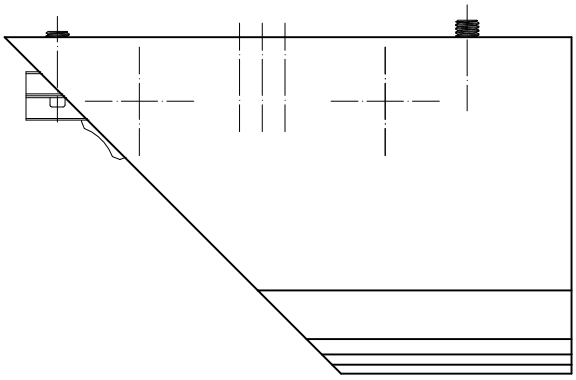

B–B

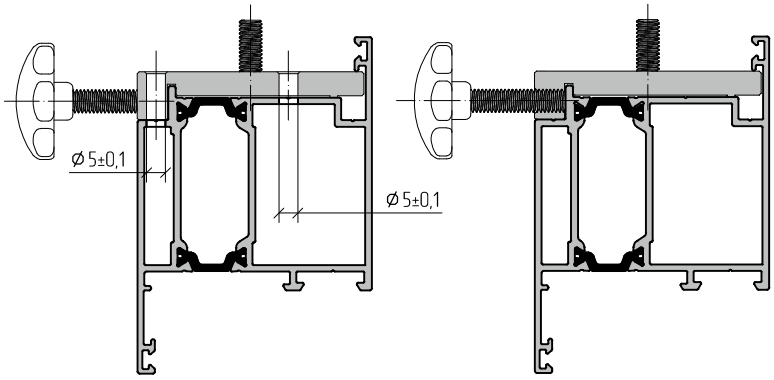

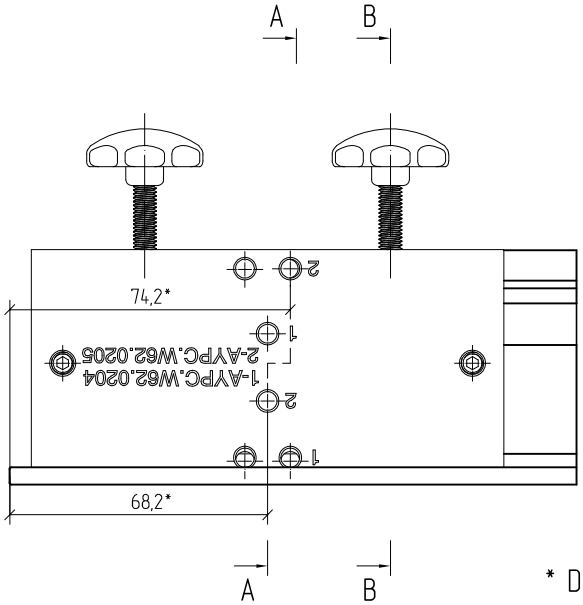

AYPC.W62.1930 jig

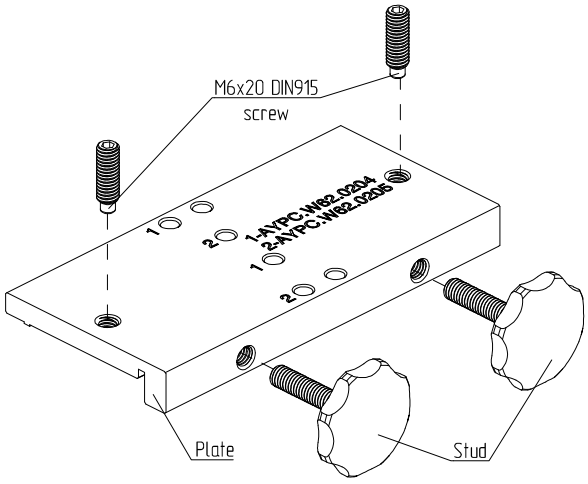

* Dimensions for reference.

AYPC.W62.1940 jig for holes drilling in AYPC.W62.0101E, AYPC.W62.0102E, AYPC.W62.0103E, AYPC.W62.0106E, AYPC.W62.0301E, AYPC.W62.0302E, AYPC.W62.0303E and other** profiles for 5x10 DIN6325D (5x8 DIN6325) pins for transom bar fastening elements installation

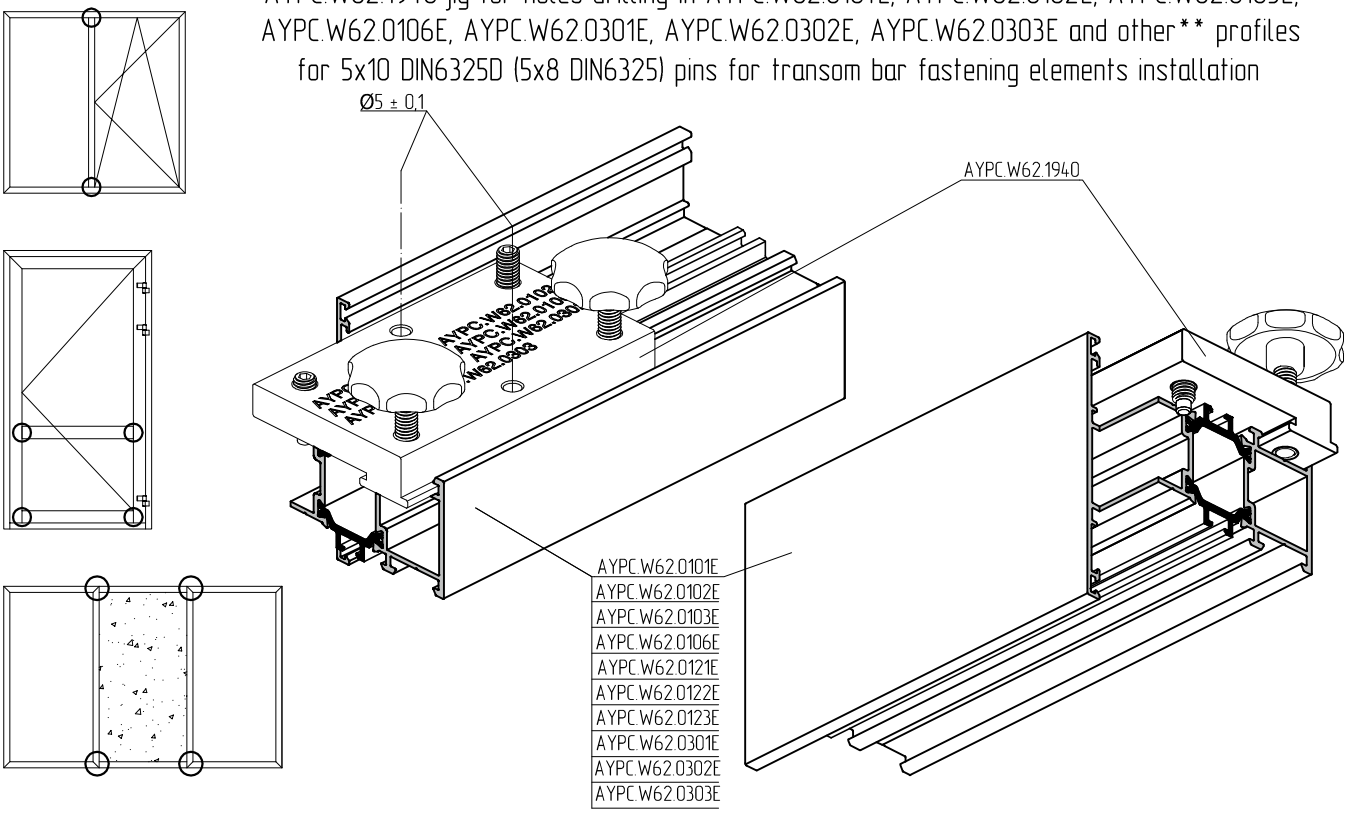

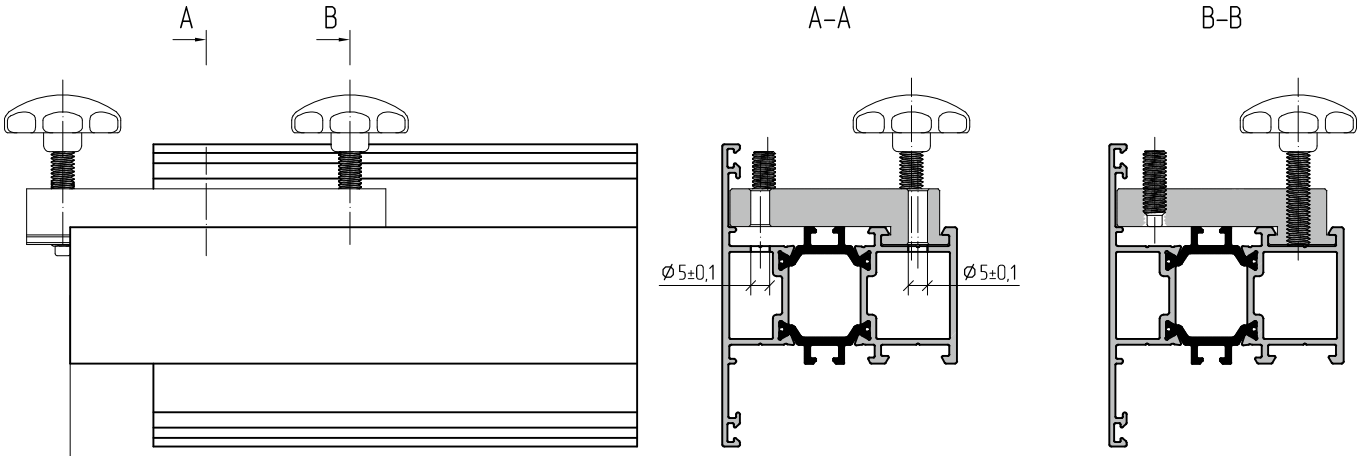

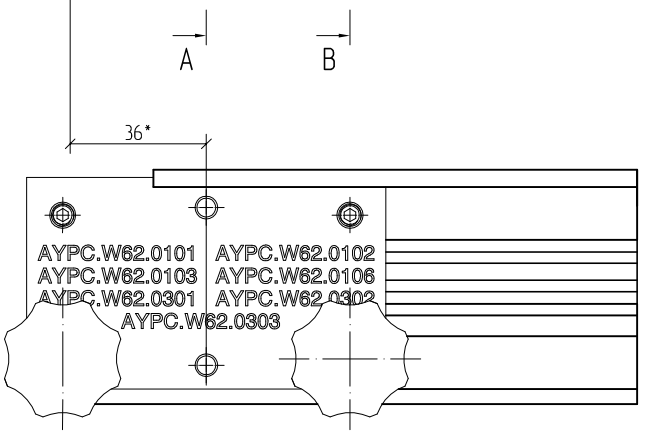

AYPC.W62.1940 jig

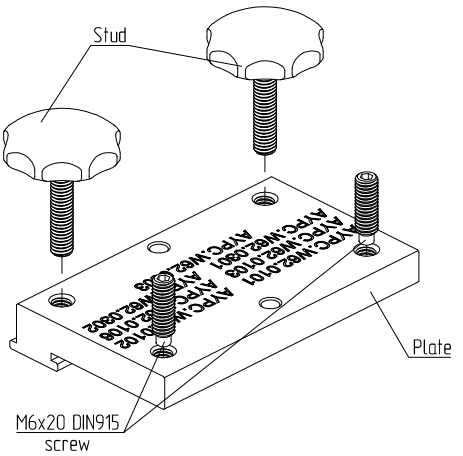

* Dimensions for reference.

Gasket machining for installation of window hinge

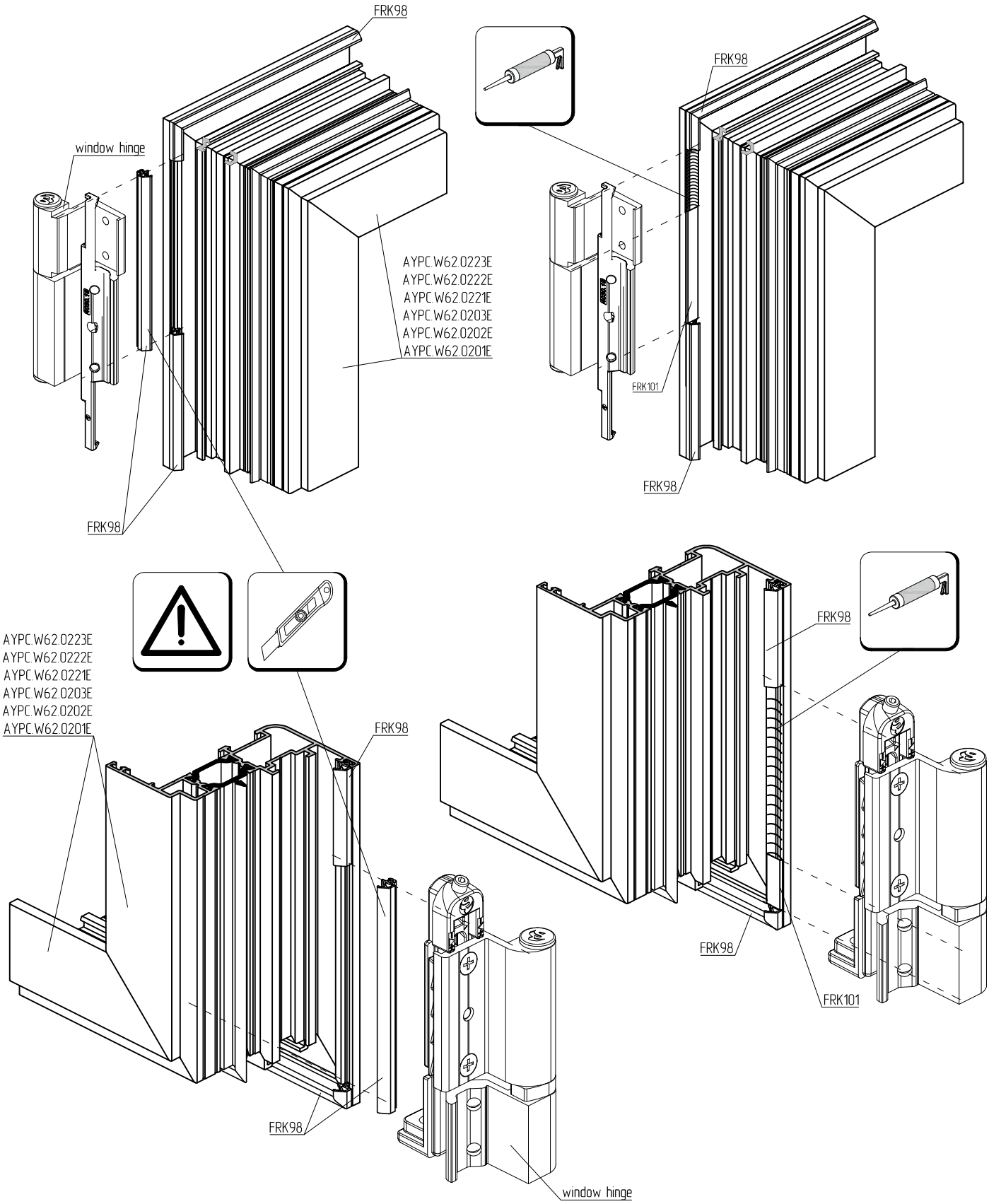

Remove locally FRK98 gasket and install FRK101 instead before window hinges installation.
The dimensions of removed part of FRK98 gasket and FRK101 gasket depend on the type of opening and hinges applied.

STATICS

11

Profiles geometry data

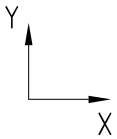

AYPC.W62.0101E

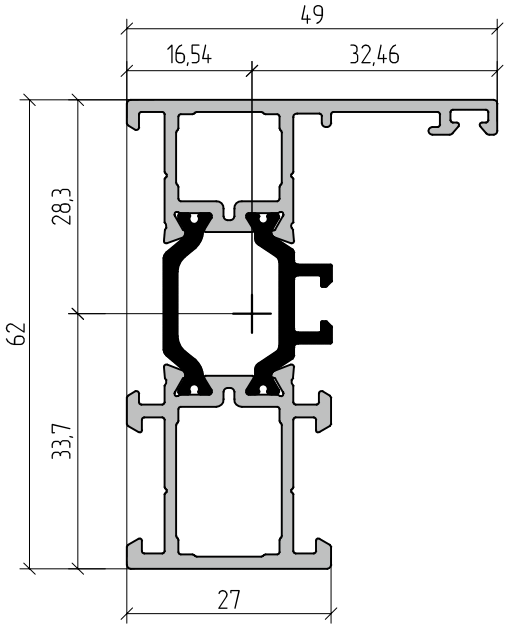

AYPC.W62.0102E

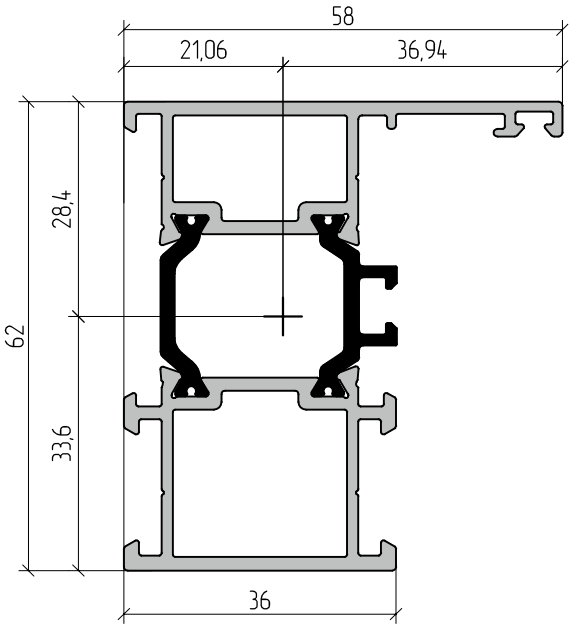

Profile	w, kg/rm	S, mm^2	Jx, cm^4	Wx, cm^3	ax, mm	Jy, cm^4	Wy, cm^3	ay, mm
AYPC.W62.0101E	1,209	518,8	14,8	4,40	33,7	4,9	1,51	32,5
AYPC.W62.0102E	1,381	583,1	17,3	5,15	33,6	8,9	2,41	36,9

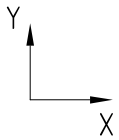

AYPC.W62.0103E

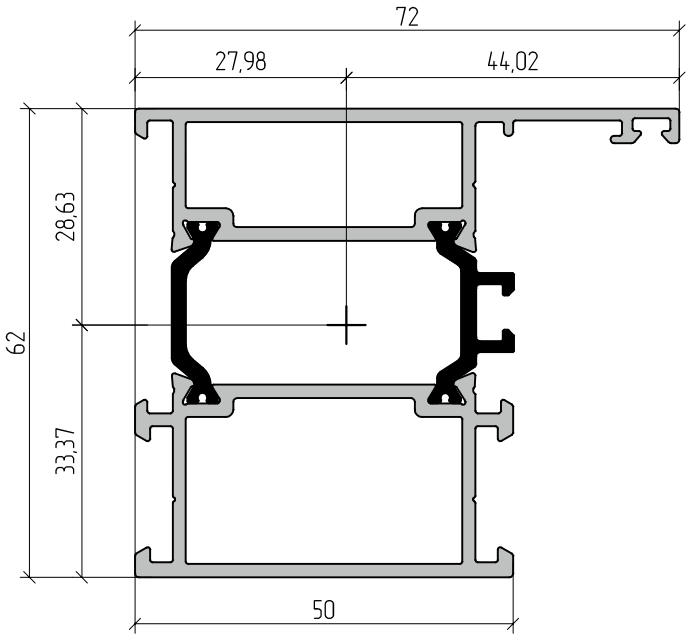

AYPC.W62.0106E

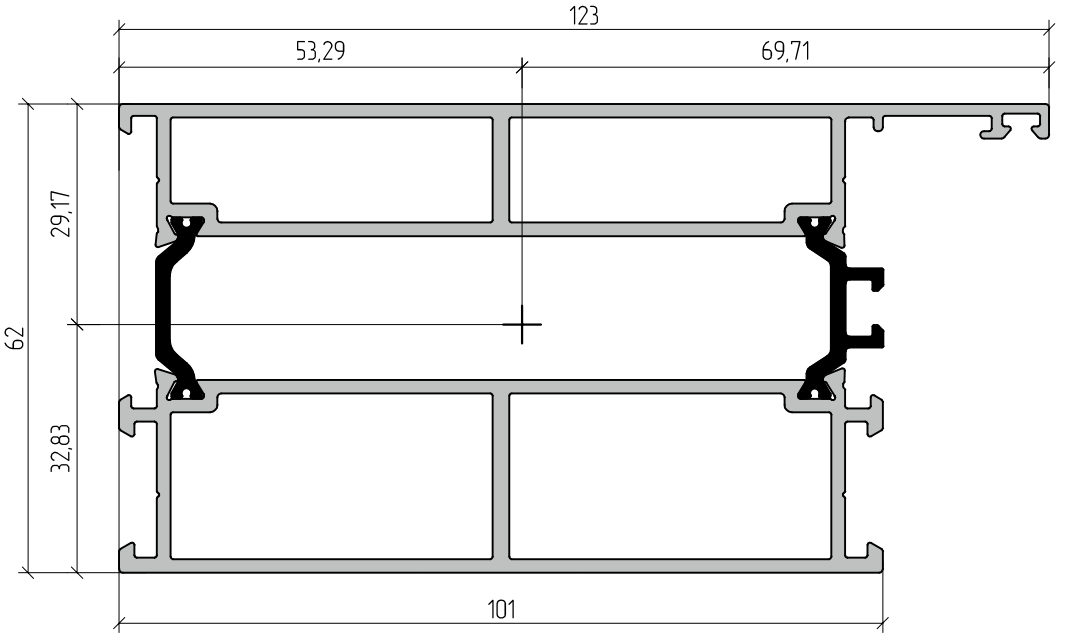

Profile	w, kg/rm	S, mm^2	Jx, cm^4	Wx, cm^3	ax, mm	Jy, cm^4	Wy, cm^3	ay, mm
AYPC.W62.0103E	1,7	701,8	21,7	6,50	33,37	19,3	4,38	44,02
AYPC.W62.0106E	2,92	1171,5	38,6	11,76	32,83	112,0	16,07	69,7

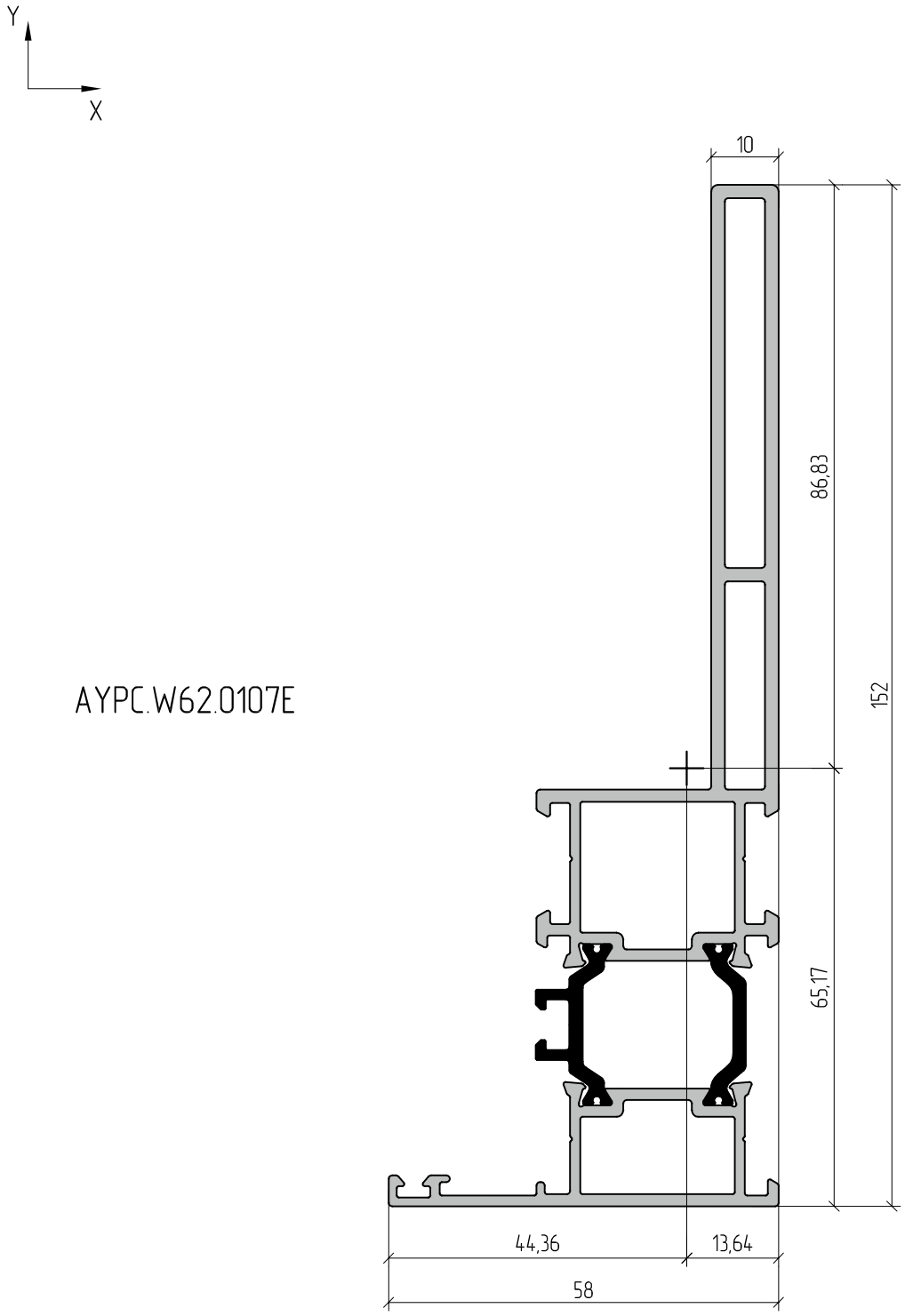

AYPC.W62.0107E

Profile	w, kg/rm	S, mm^2	Jx, cm^4	Wx, cm^3	ax, mm	Jy, cm^4	Wy, cm^3	ay, mm
AYPC.W62.0107E	2,42	1171,5	135,2	15,57	86,83	14,8	3,34	44,36

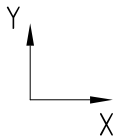

AYPC.W62.0301E

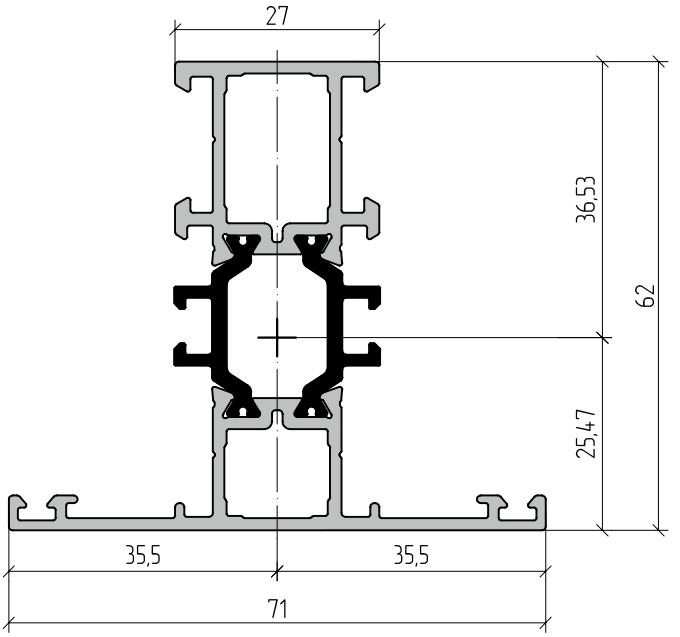

AYPC.W62.0302E

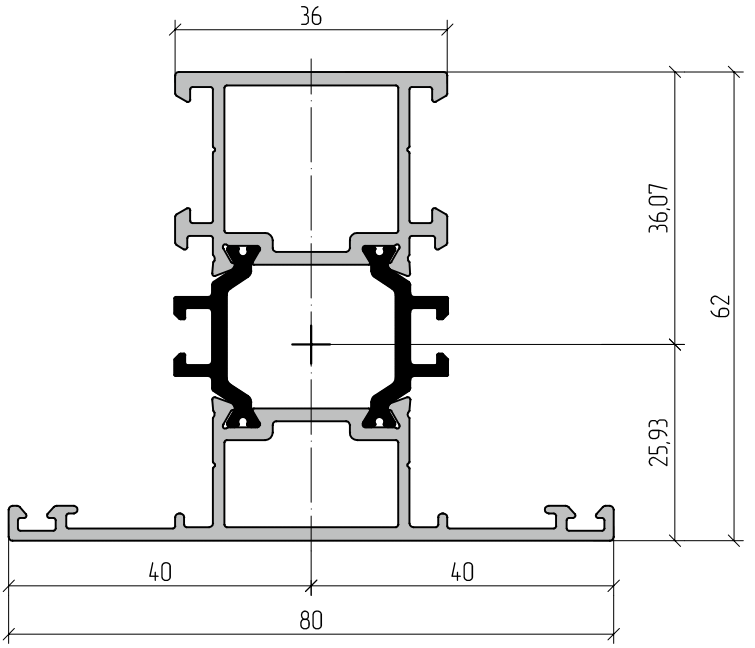

Profile	w, kg/rm	S, mm^2	Jx, cm^4	Wx, cm^3	ax, mm	Jy, cm^4	Wy, cm^3	ay, mm
AYPC.W62.0301E	1,353	583,6	17,0	4,66	36,53	8,5	2,39	35,5
AYPC.W62.0302E	1,529	647,9	19,6	5,42	36,07	13,7	3,43	40

AYPC.W62.0303E

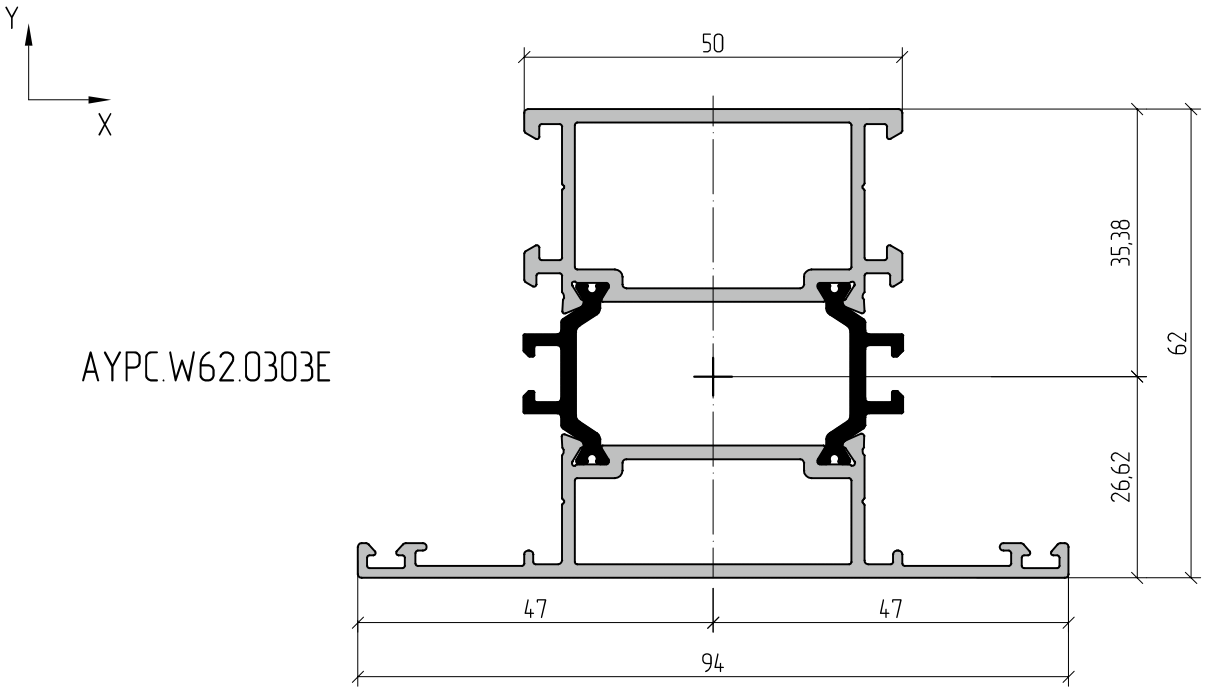

AYPC.W62.0305E

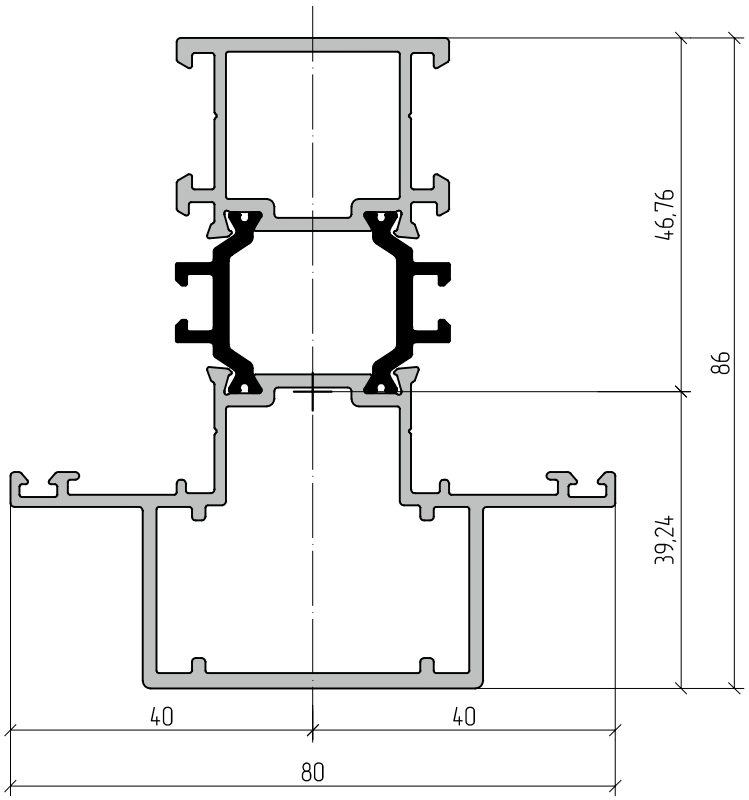

Profile	w, kg/rm	S, mm^2	Jx, cm^4	Wx, cm^3	ax, mm	Jy, cm^4	Wy, cm^3	ay, mm
AYPC.W62.0303E	1,85	766,6	24,0	6,79	35,38	26,3	5,60	47
AYPC.W62.0305E	1,91	787,6	38,1	8,14	46,76	18,9	4,73	40

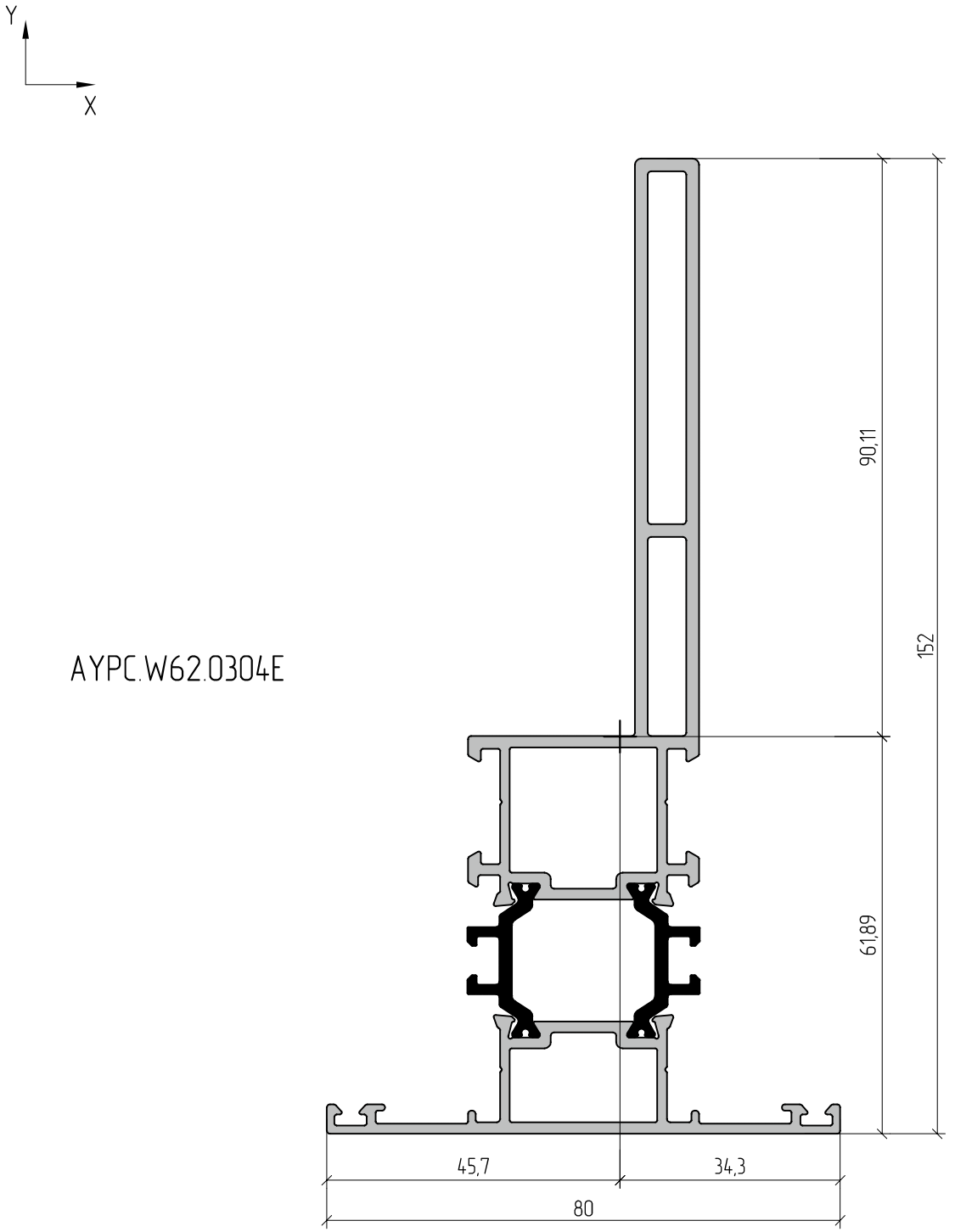

Profile	w, kg/rm	S, mm^2	Jx, cm^4	Wx, cm^3	ax, mm	Jy, cm^4	Wy, cm^3	ay, mm
AYPC.W62.0304E	2,57	1032,1	148,3	16,45	90,11	17,9	3,92	45,7

AYPC.W62.0201E

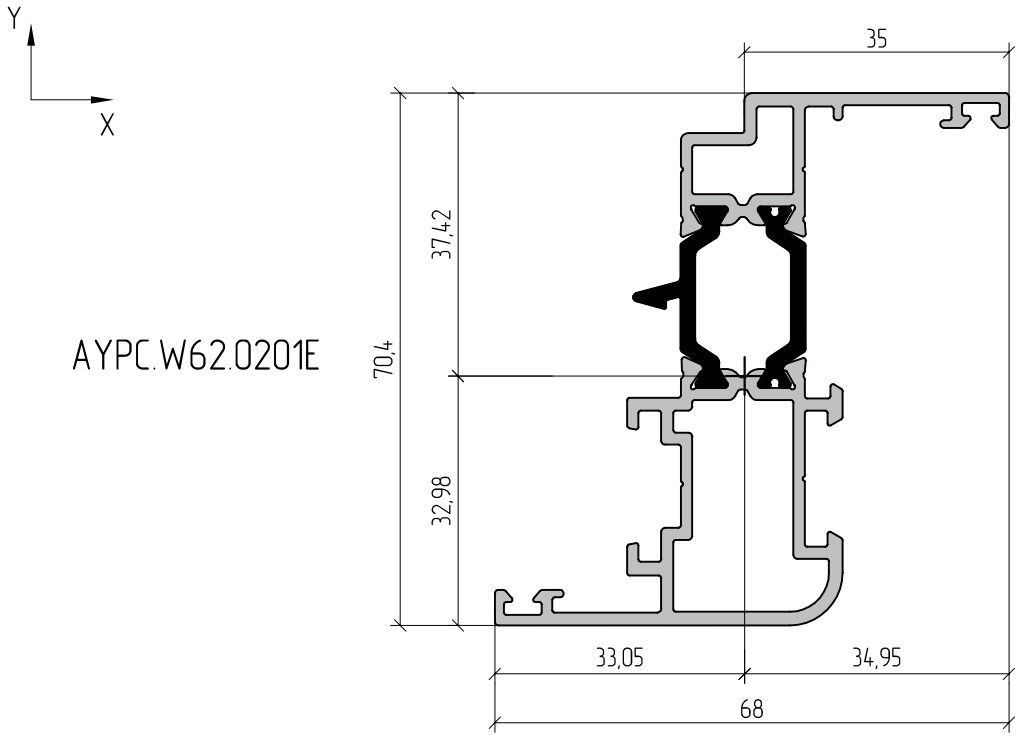

AYPC.W62.0202E

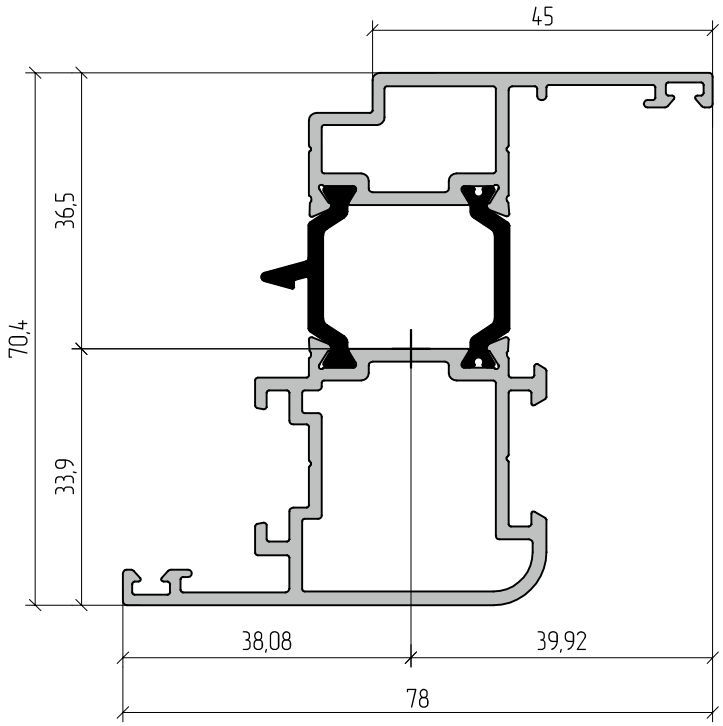

Profile	w, kg/rm	S, mm^2	Jx, cm^4	Wx, cm^3	ax, mm	Jy, cm^4	Wy, cm^3	ay, mm
AYPC.W62.0201E	1,376	575,4	22,2	5,92	37,42	8,2	2,35	34,95
AYPC.W62.0202E	1,616	667,1	26,4	7,23	36,5	14,4	3,61	40

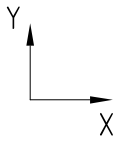

AYPC.W62.0203E

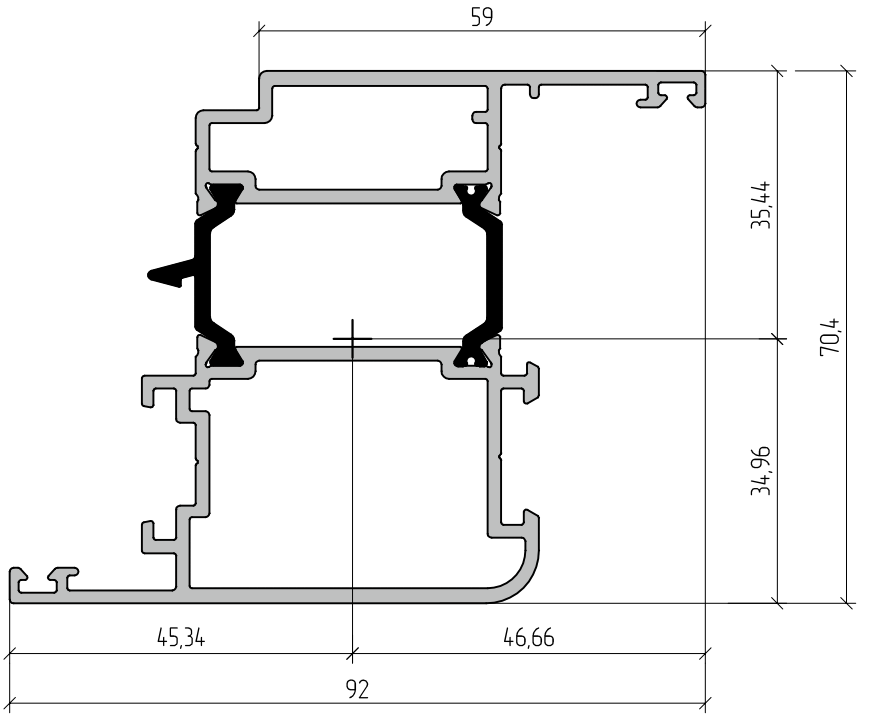

Profile	w, kg/rm	S, mm^2	Jx, cm^4	Wx, cm^3	ax, mm	Jy, cm^4	Wy, cm^3	ay, mm
AYPC.W62.0203E	1,98	800,6	33,74	9,52	35,44	28,8	6,17	46,66

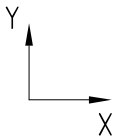

AYPC.W62.0104E

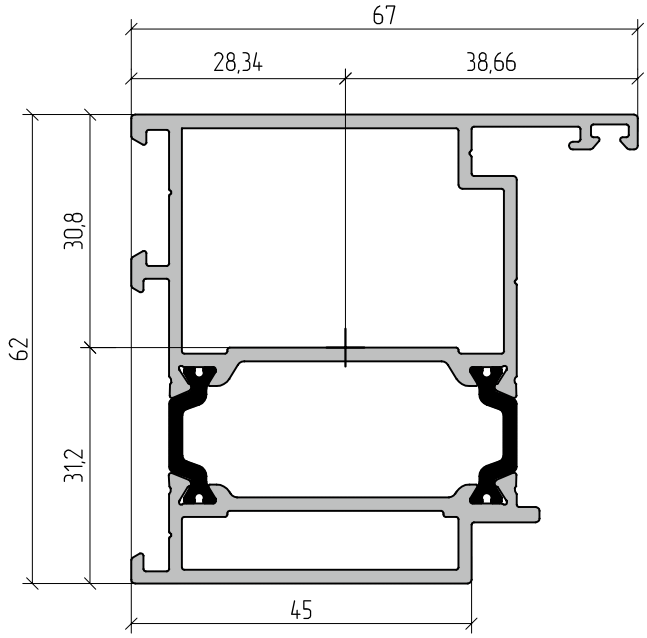

AYPC.W62.0105E

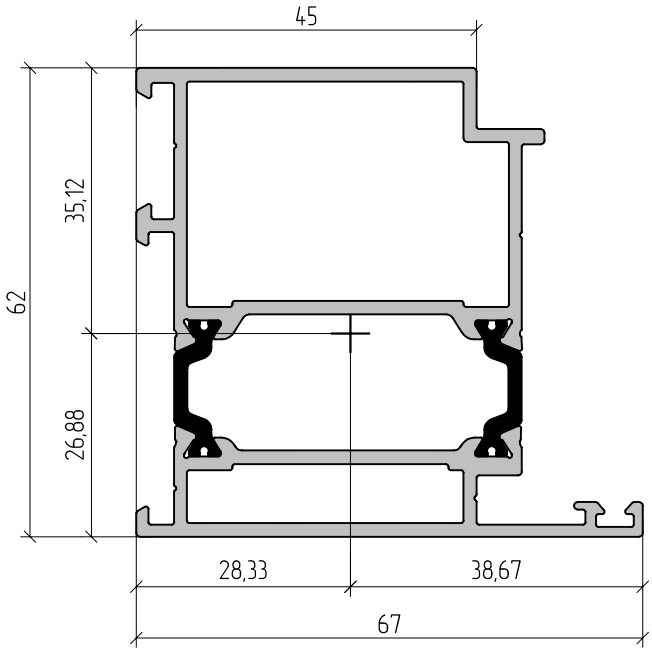

Profile	w, kg/rm	S, mm^2	Jx, cm^4	Wx, cm^3	ax, mm	Jy, cm^4	Wy, cm^3	ay, mm
AYPC.W62.0104E	1,72	685,6	22,0	7,0	31,2	20,3	5,3	38,66
AYPC.W62.0105E	1,72	685,6	21,2	6,0	35,12	20,3	5,2	38,67

AYPC.W62.0204E

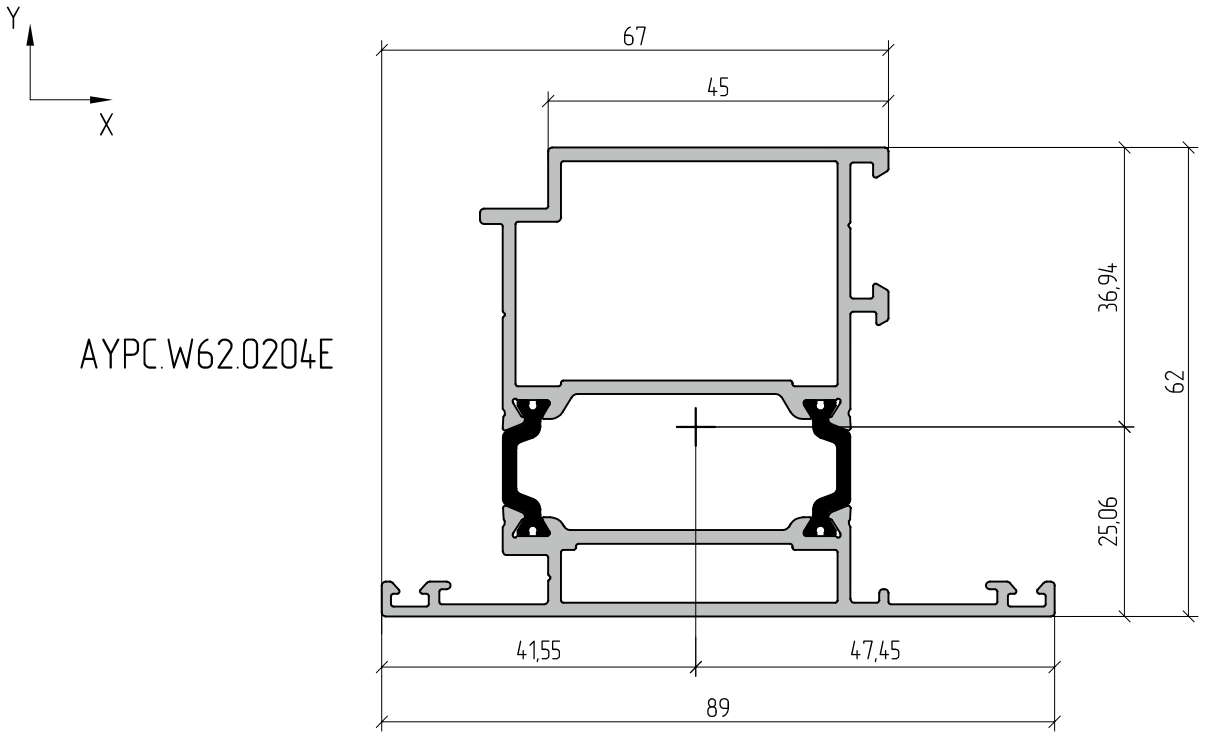

AYPC.W62.0205E

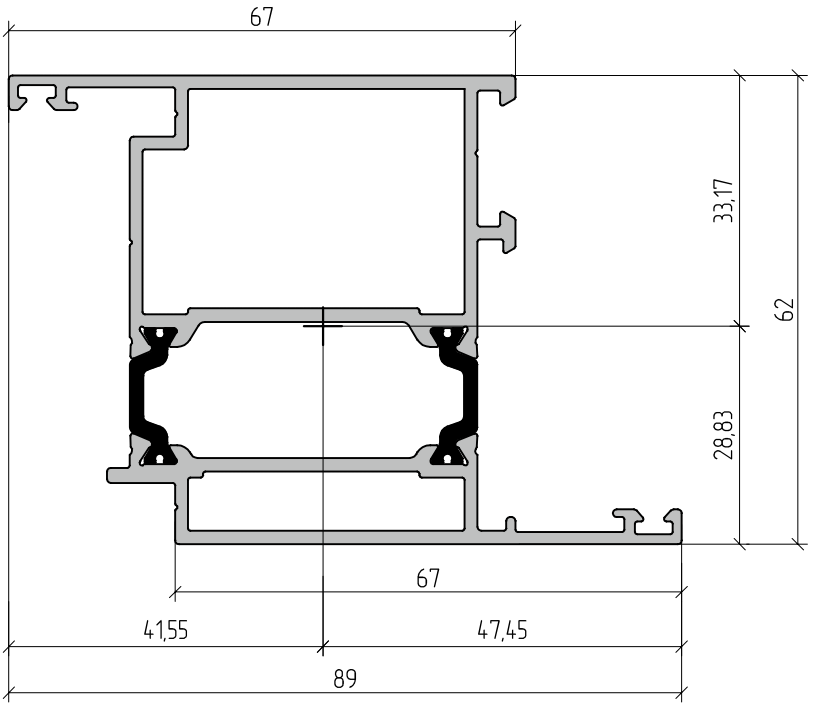

Profile	w, kg/rm	S, mm^2	Jx, cm^4	Wx, cm^3	ax, mm	Jy, cm^4	Wy, cm^3	ay, mm
AYPC.W62.0204E	2,096	730,8	23,3	6,3	36,94	27,4	5,8	47,45
AYPC.W62.0205E	1,872	730,8	24,7	7,4	33,17	27,4	5,8	47,45

AYPC.W62.0211E

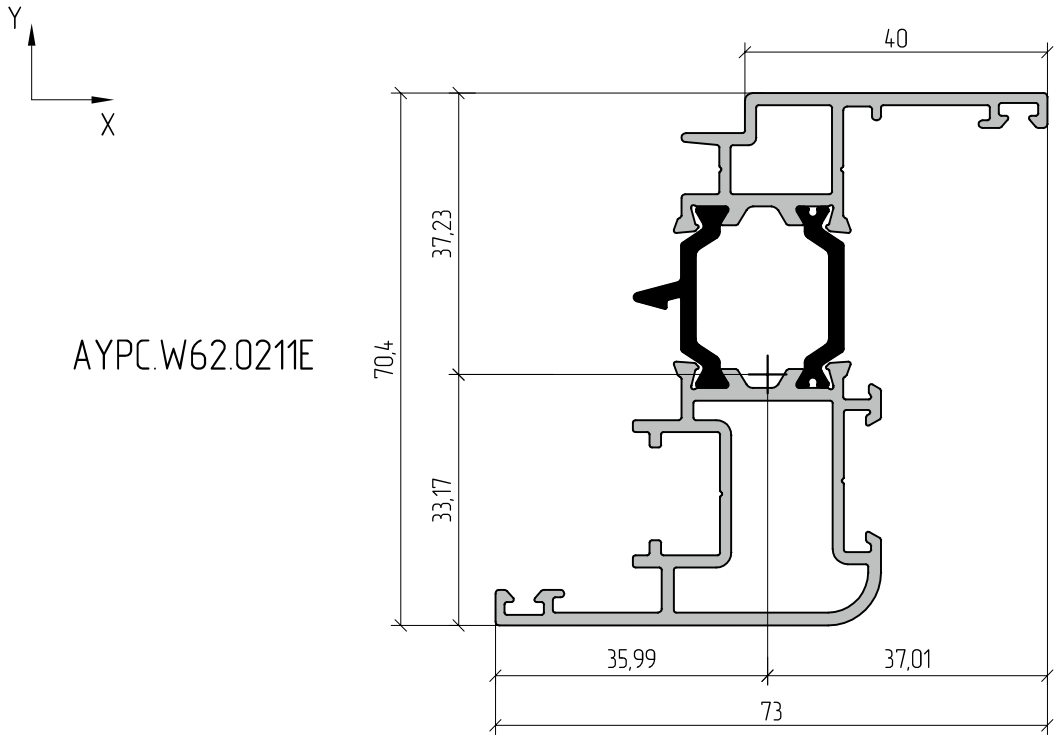

AYPC.W62.0212E

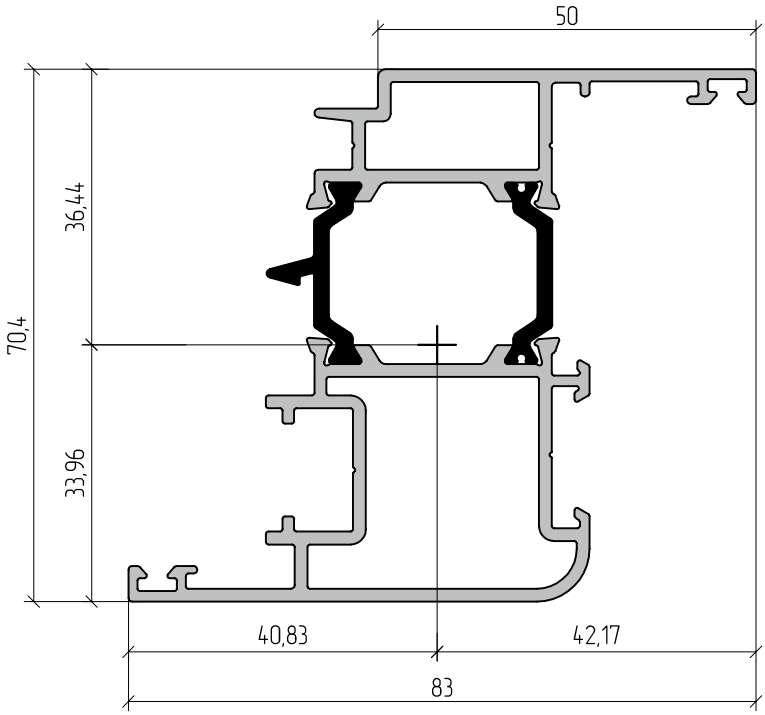

Profile	w, kg/rm	S, mm^2	Jx, cm^4	Wx, cm^3	ax, mm	Jy, cm^4	Wy, cm^3	ay, mm
AYPC.W62.0211E	1,515	489,3	23,9	6,42	37,23	10,28	2,78	37,01
AYPC.W62.0212E	1,753	577,2	28,4	7,79	36,44	17,55	4,16	42

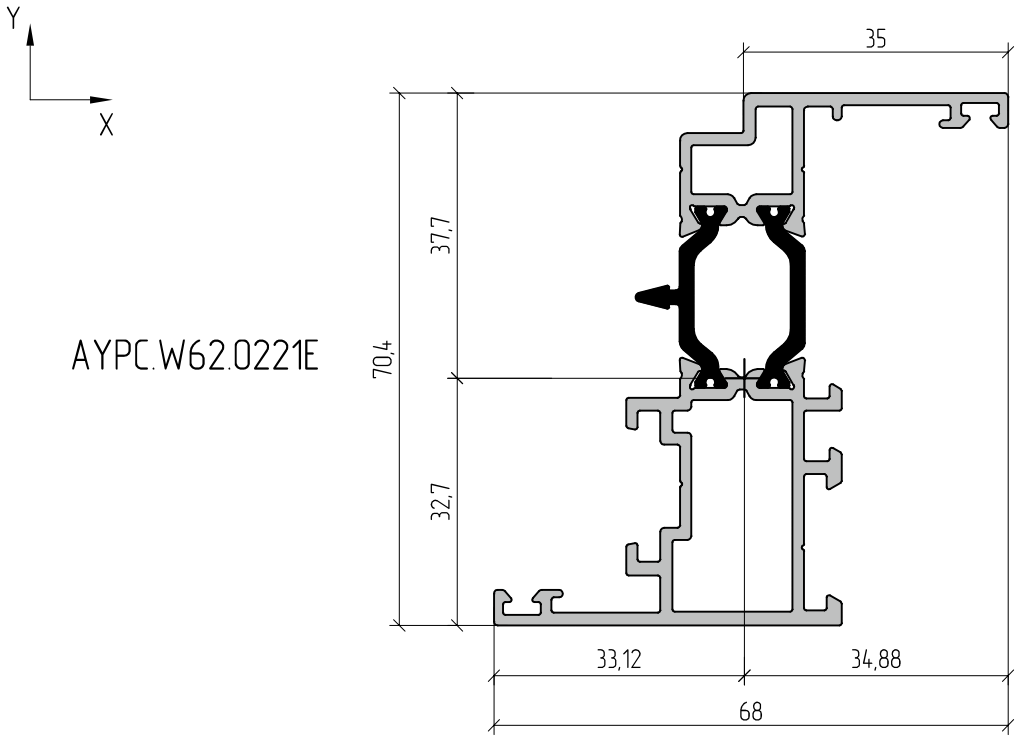

AYPC.W62.0221E

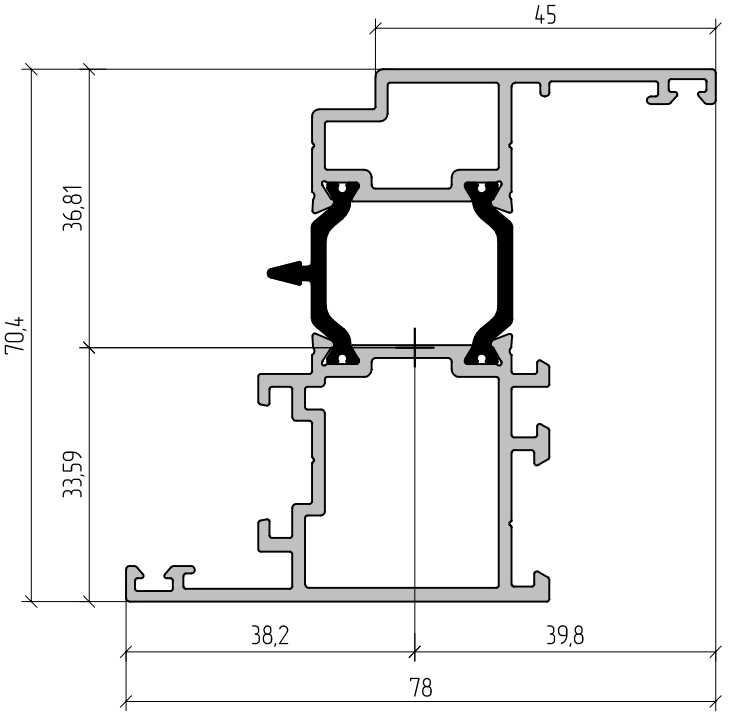

AYPC.W62.0222E

Profile	w, kg/rm	S, mm^2	Jx, cm^4	Wx, cm^3	ax, mm	Jy, cm^4	Wy, cm^3	ay, mm
AYPC.W62.0221E	1,426	585,4	22,4	5,95	37,70	8,21	2,35	34,88
AYPC.W62.0222E	1,666	678,8	26,8	7,28	36,81	14,48	3,64	39,80

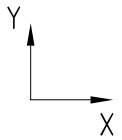

AYPC.W62.0223E

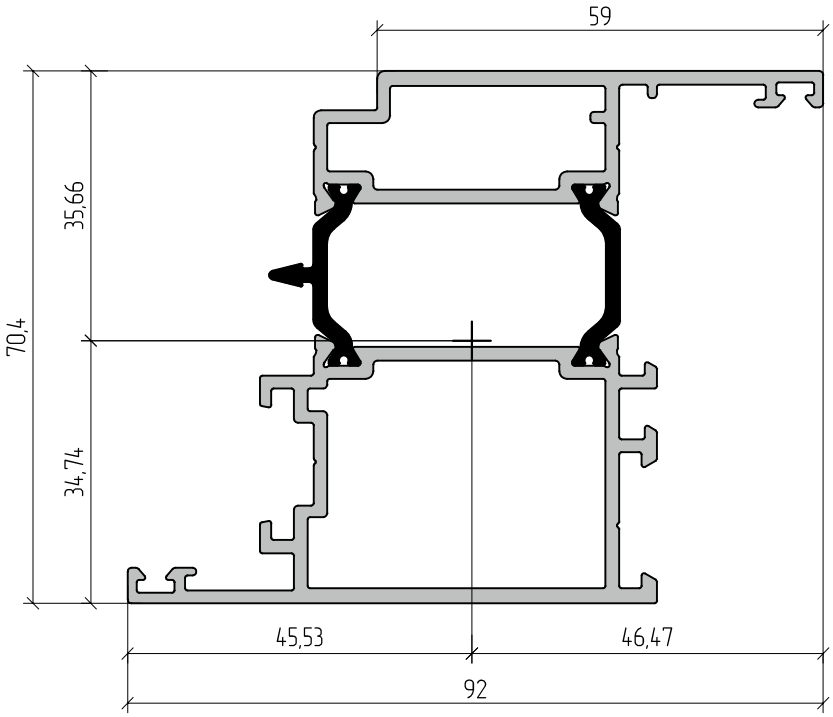

Profile	w, kg/rm	S, mm^2	Jx, cm^4	Wx, cm^3	ax, mm	Jy, cm^4	Wy, cm^3	ay, mm
AYPC.W62.0223E	2,035	809,7	34,08	9,56	35,66	29,0	6,24	46,47

AYPC.W62.0806E

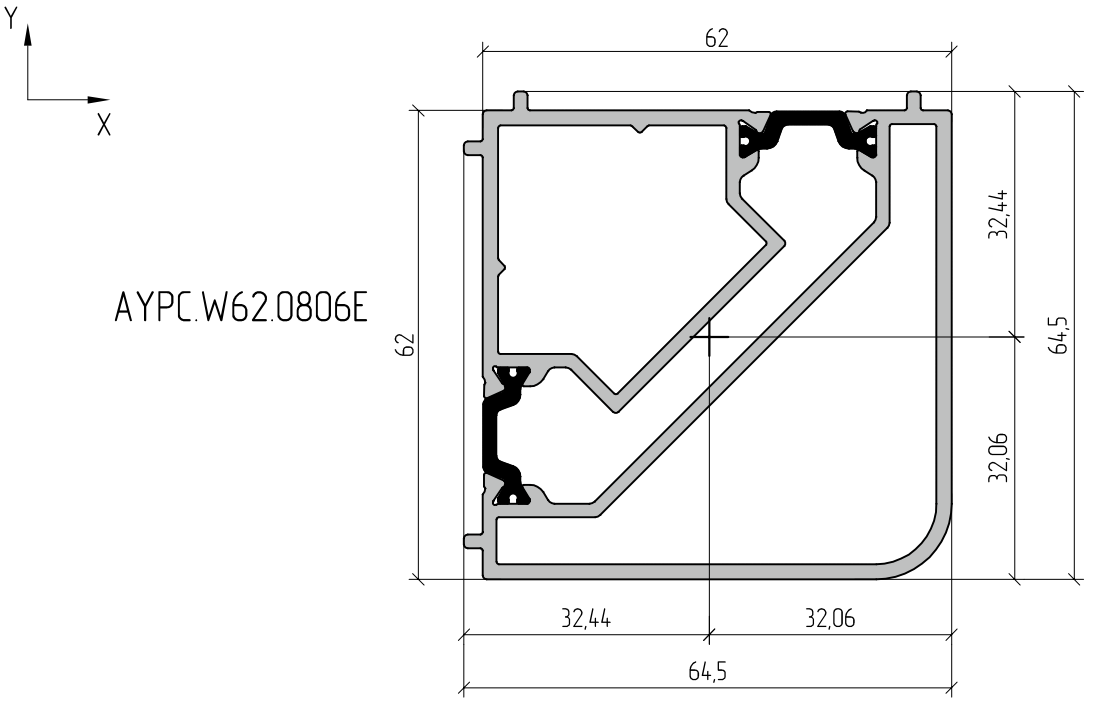

AYPC.W62.0807E

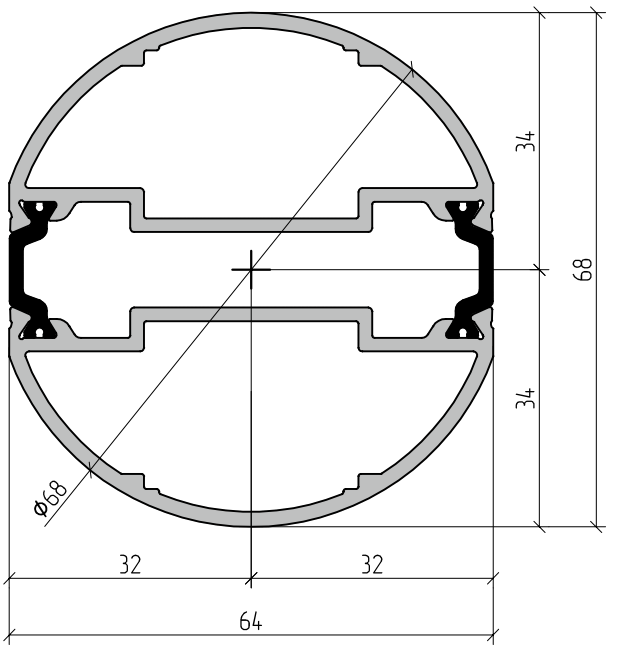

Profile	w, kg/rm	S, mm^2	Jx, cm^4	Wx, cm^3	ax, mm	Jy, cm^4	Wy, cm^3	ay, mm
AYPC.W62.0806E	2,096	824,1	25,1	7,7	32,44	33,5	10,3	32,44
AYPC.W62.0807E	1,872	741,9	18,9	5,6	34,00	26,6	8,3	32,00

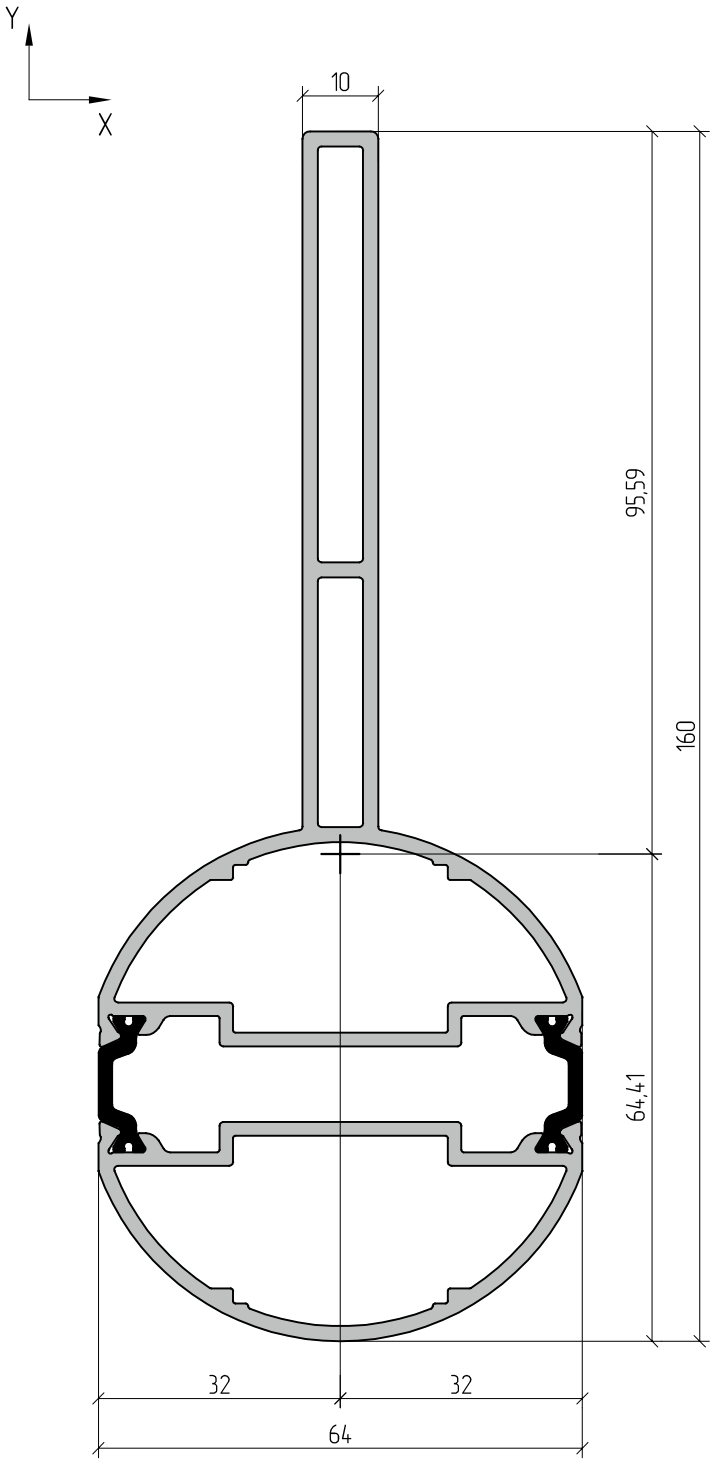

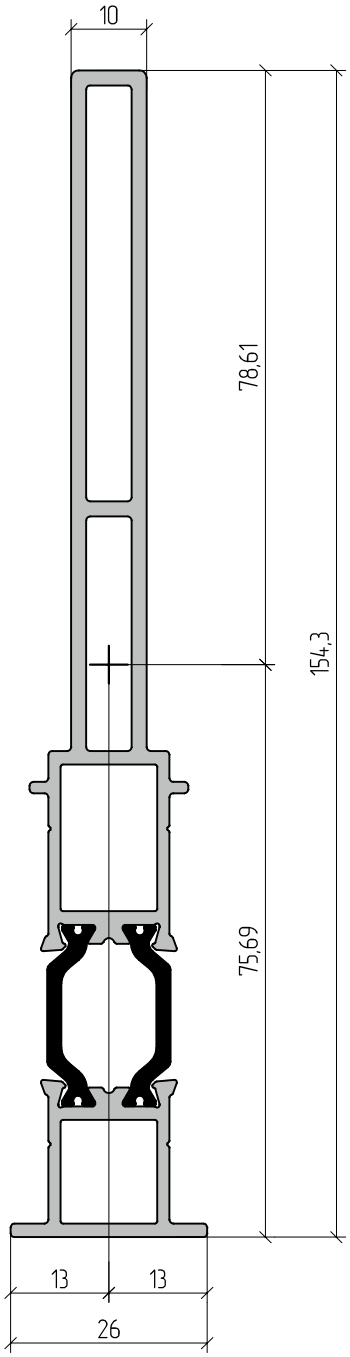

AYPC.W62.0811E

AYPC.W62.0812E

Profile	w, kg/rm	S, mm^2	Jx, cm^4	Wx, cm^3	ax, mm	Jy, cm^4	Wy, cm^3	ay, mm
AYPC.W62.0811E	2,93	1137,5	160,6	16,8	95,59	27,2	8,5	32
AYPC.W62.0812E	1,98	796,1	110,1	14,0	78,61	1,8	1,4	13

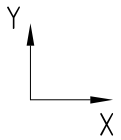

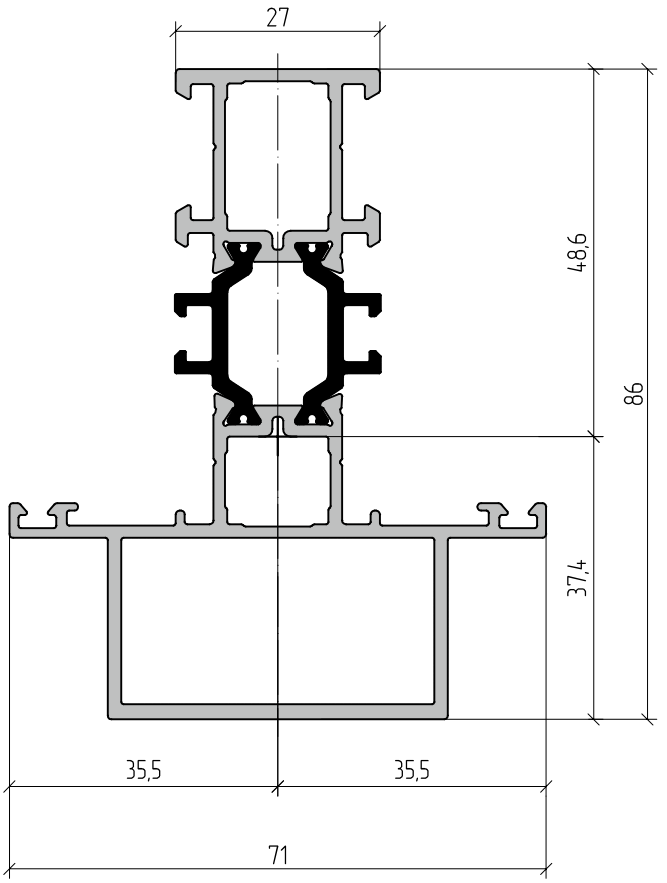

AYPC.W62.0306E

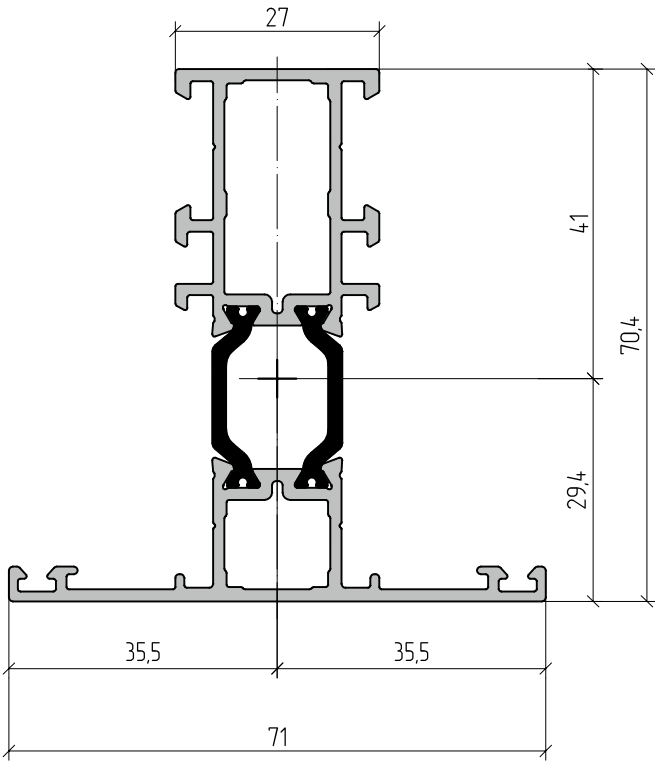

AYPC.W62.0321E

Profile	w, kg/rm	S, mm^2	Jx, cm^4	Wx, cm^3	ax, mm	Jy, cm^4	Wy, cm^3	ay, mm
AYPC.W62.0306E	1,81	761,9	34,4	7,1	48,6	13,7	3,9	35,5
AYPC.W62.0321E	1,44	908,3	22,8	6,4	35,5	8,9	2,2	40

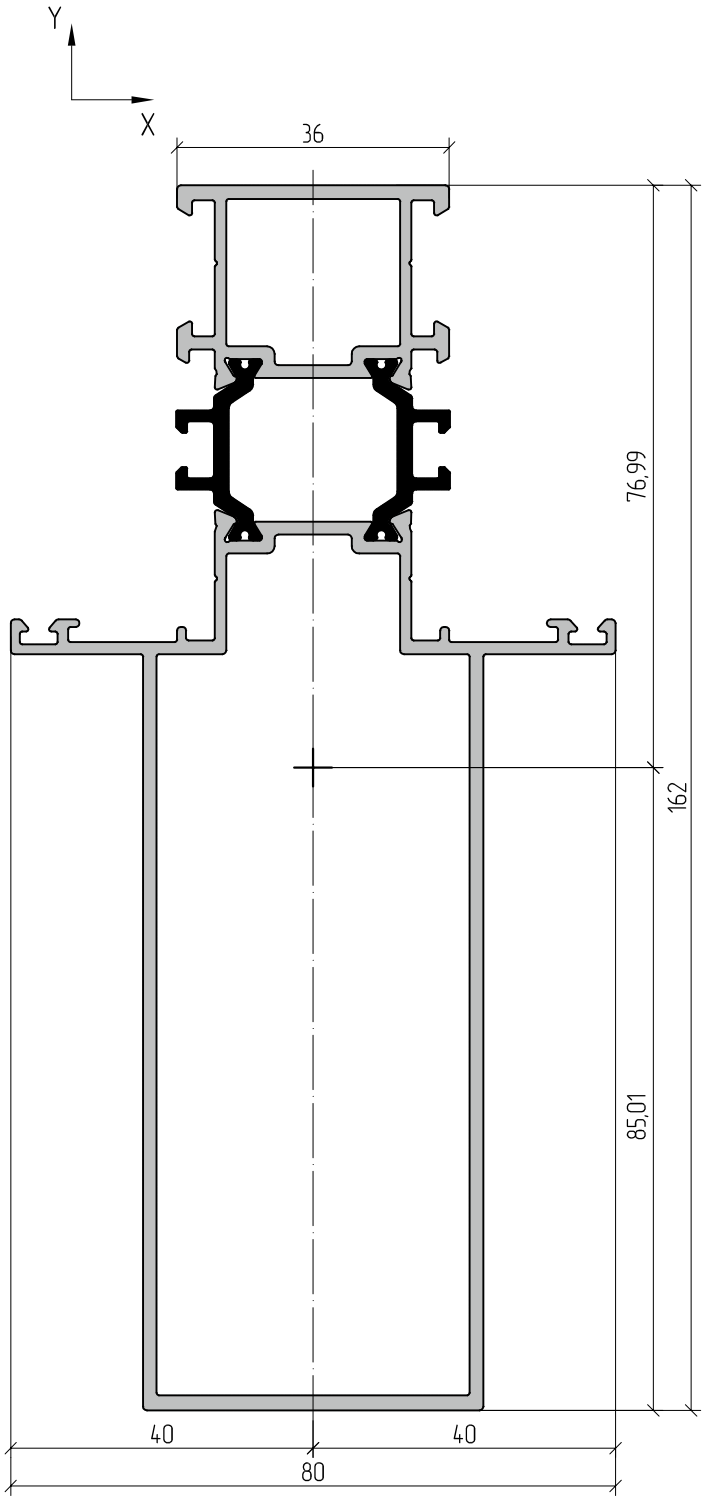

AYPC.W62.0307E

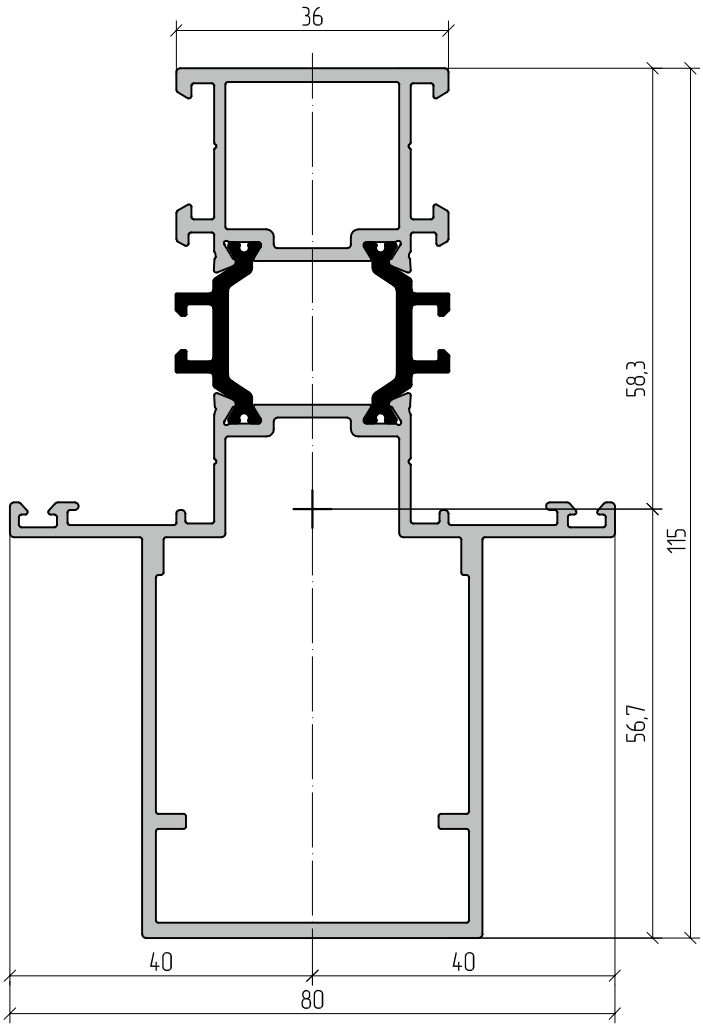

AYPC.W62.0308E

Profile	w, kg/rm	S, mm^2	Jx, cm^4	Wx, cm^3	ax, mm	Jy, cm^4	Wy, cm^3	ay, mm
AYPC.W62.0307E	2,626	1051,5	180,2	21,2	85,0	31,5	7,9	40
AYPC.W62.0308E	2,237	908,3	75,6	13,0	58,3	24,5	6,1	40

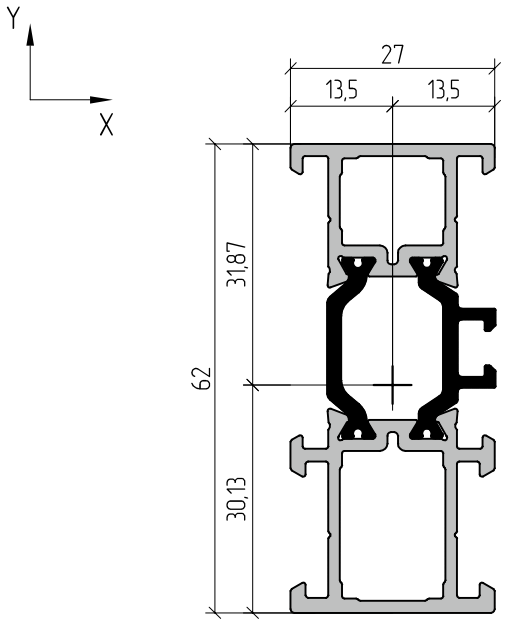

AYPC.W62.0121E

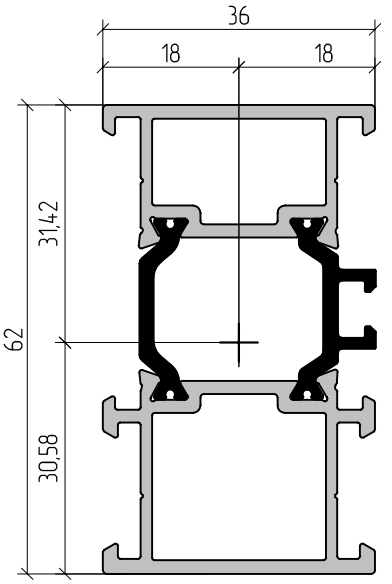

AYPC.W62.0122E

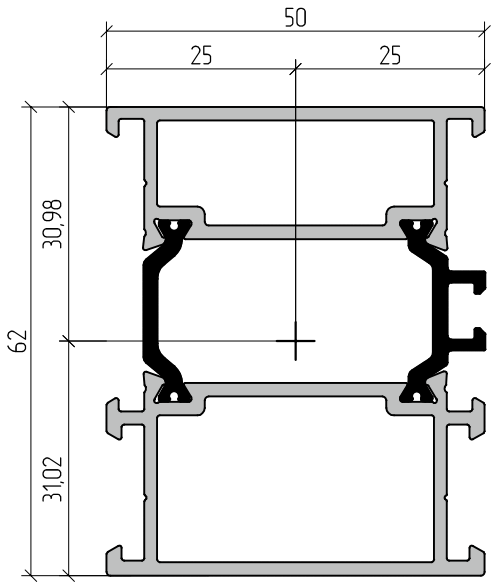

AYPC.W62.0123E

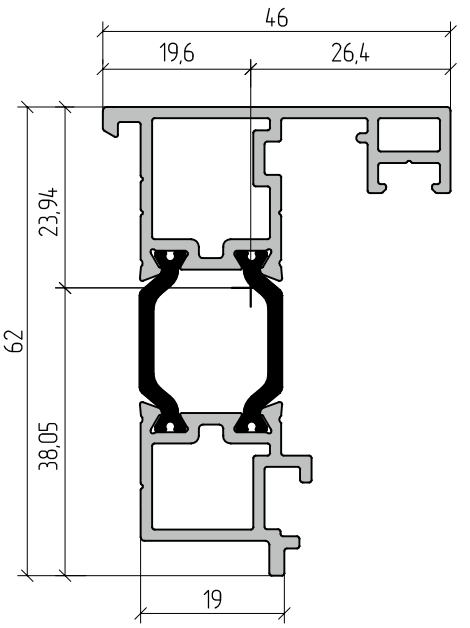

AYPC.W62.0815E

Profile	w, kg/rm	S, mm^2	Jx, cm^4	Wx, cm^3	ax, mm	Jy, cm^4	Wy, cm^3	ay, mm
AYPC.W62.0121E	1,10	480,7	12,0	3,8	31,87	2,1	1,6	13,5
AYPC.W62.0122E	1,27	544,8	14,6	4,6	31,42	4,9	2,7	18
AYPC.W62.0123E	1,59	661,9	19,0	6,1	31,02	13,2	5,3	25
AYPC.W62.0815E	1,14	480,1	12,1	3,2	38,05	5,1	1,9	26,4

Examples of selection of tilt and turn window with SAVIO RIBANTA 5 hardware
(hinges kit for load up to 110 kg) with ALT W62 profiles and accessories .

Example 1.
Basic data:
– it is required to make a window with a sash of 1250 x2250 mm (width x height);
– formular of glass unit is 6x10x4x10x6 (weight 1 m2 = 40 kg).
Selection of sash type and hardware kit:
1) under the diagram please find a cross point of sash dimensions. A point should be at the marked area. The marked area is application area of AYPC.W62.0203E profile.
2) please check if the sash weight limits (m2) are fulfilled. Please calculate additionally weight of aluminium profiles (sash and glass bead) for 1m2 window. According to the Glazing table at ALTW62 technical catalogue please choose AYPC.C48.0606 glass bead. Please take weight of this glass bead and AYPC.W62.0203E sash profile at the catalogue section "Order info. Coding". Please use the following formular for calculation: ((2,11+0,307)*(1,25+2,25)*2)/(1,25*2,25)=6,02 kg/m2 and add infill unit weight: 40+6,02=46,02 kg/m2.
3) Please collate the value with weight limits at reference point for 1 m2 according to the p.2. Here you can see that reference point is at the area of sash weight limits from 35 kg/m2 to 40 kg/m2, but actual weight is higher than the limit weight.
Conclusion: such size of this sash isn't appropriate to use with indicated glass unit size. It is necessary to fulfill one (several) following tasks: reduce infill unit weight, change size dimensions or use reinforced hardware.

Example 2.
Basic data:
– it is required to make a window with a sash of 1370 x1770 mm (width x height);
– glass unit formular 4x12x4x12x4 (weight 1 m2 = 30 kg).
Selection of sash type and hardware kit:
1) under the diagram please find cross point of sash dimensions. Point should appear at at the marked area. The marked area is application area of AYPC.W62.0203E profile.
2) than please check if the sash weight limits (m2) are fulfilled. Please calculate additionally weight of aluminium profiles (sash and glass bead) for 1m2 window. According to the Glazing table at ALTW62 technical catalogue please choose AYPC.C48.0608 glass bead. Please take weight of this glass bead and AYPC.W62.0203E sash profile at the catalogue section "Order info. Coding". Please use the following formular for calculation: ((1,76+0,339)*(1,37+1,77)*2)/(1,37*1,77)=5,43 kg/m2 and add infill unit weight: 30+5,43=35,43 kg/m2.
3) Please collate the value with weight limits at reference point for 1 m2 according to the p. 2. Here you can see that reference point is at the area of sash weight limits from 40 kg/m2 to 45 kg/m2, that means indicated size is acceptable (calculated value is lower than the limits).
4) Please select hardware kit (handle 873.1, compass arm 3200.772R/L, additional compass arm 3200.800R/L, main kit with vercal latch 3200.20R/L, a kit for 6 locking points 3200.820 R/L)
Conclusion: it is possible to make and use a sash with the indicated glass unit dimentsions.

Example 3.
Basic data:
– it is required to make a window with a sash of 1600 x2000 mm (width x height);
– glass unit formular 6x14x4x14x6 (weight 1 m2 = 40 kg).
Selection of sash type and hardware kit:
– under the diagram please find cross point of sash dimensions. Point should appear at at the marked area, where it is shown that with such dimesions the sash can't be made.

Diagram for selection of sash dimension of tilt and turn window with hardware SAVIO RIBANTA 5 (*hinges kit for load up to 110 kg*) with profiles and accessories of ALTW62 system. *Example of sash selection.*

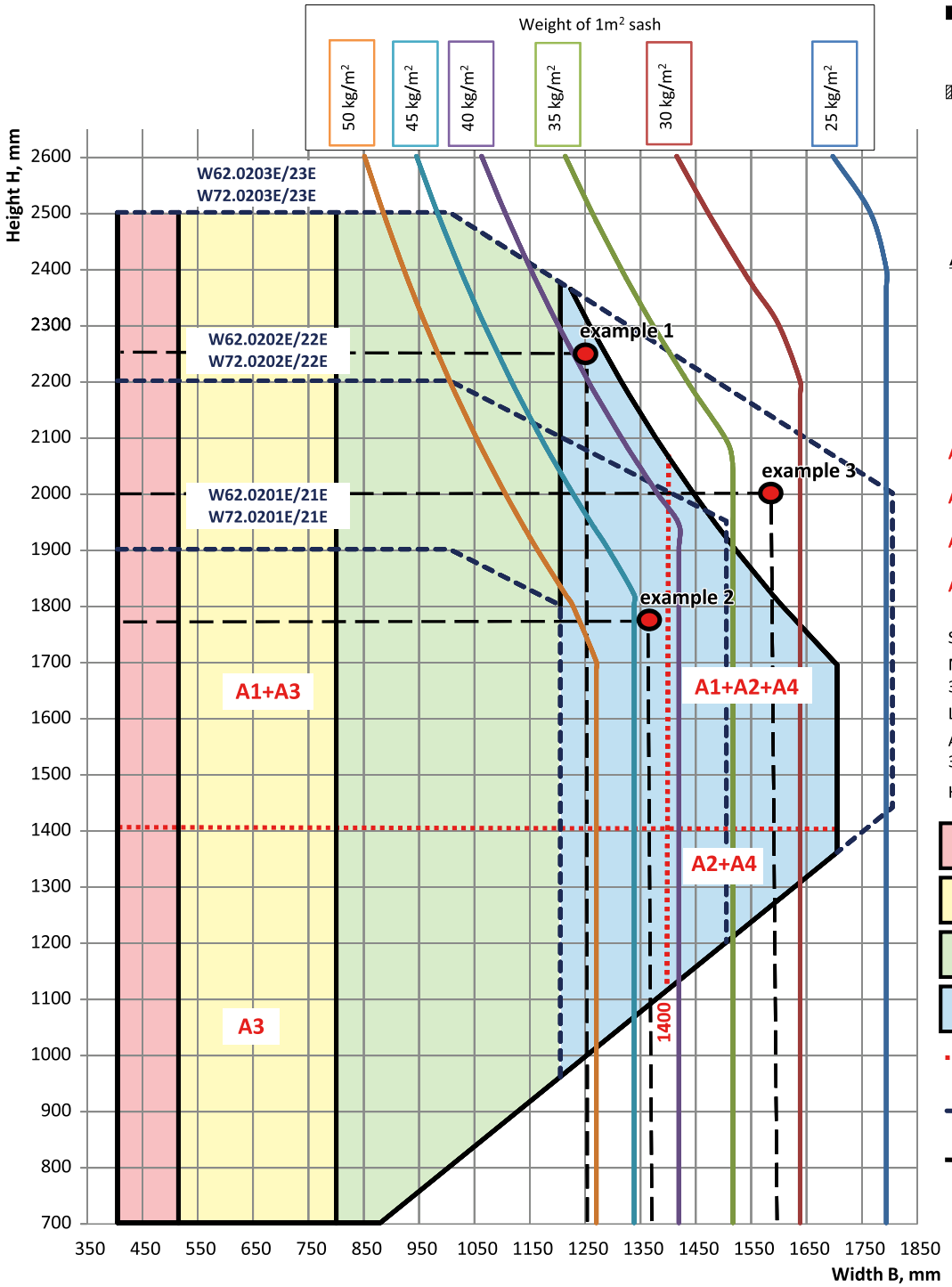

A1 – 6 locking points kit
A2 – 8 locking points kit

A3 – main kit with vertical latches
A4 – main kit with corner switch

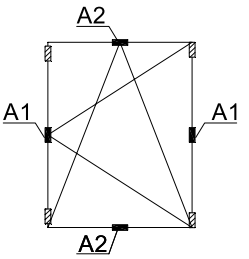

RIBANTA 5 kits

A1- 3200.820 R/L - 6 locking points kit
A2 - 3200.825 R/L - 8 locking points kit
A3 - 3200.20R/L - main kit with vertical latch
A4 - 3200.22R/L - main kit with corner switch

Short compass arm - 3200.770R/L

Medium compass arm - 3200.771R/L

Large compas arm - 3200.772R/L

Addit. compass arm - 3200.800R/L

Hinges kit - 3200.729

short compass arm area of use

medium compass arm area of use

large compass arm area of use

large and addit. compass arm ara of use

area of use of locking points

sash profiles areas of use

area of possible manufacturing of units from ALT profiles ALT with SAVIO hardware

Diagram for selection of sash dimensions and tilt and turn hardware kits SAVIO Ribanta 5

(hinges kit for load up to 110 kg)

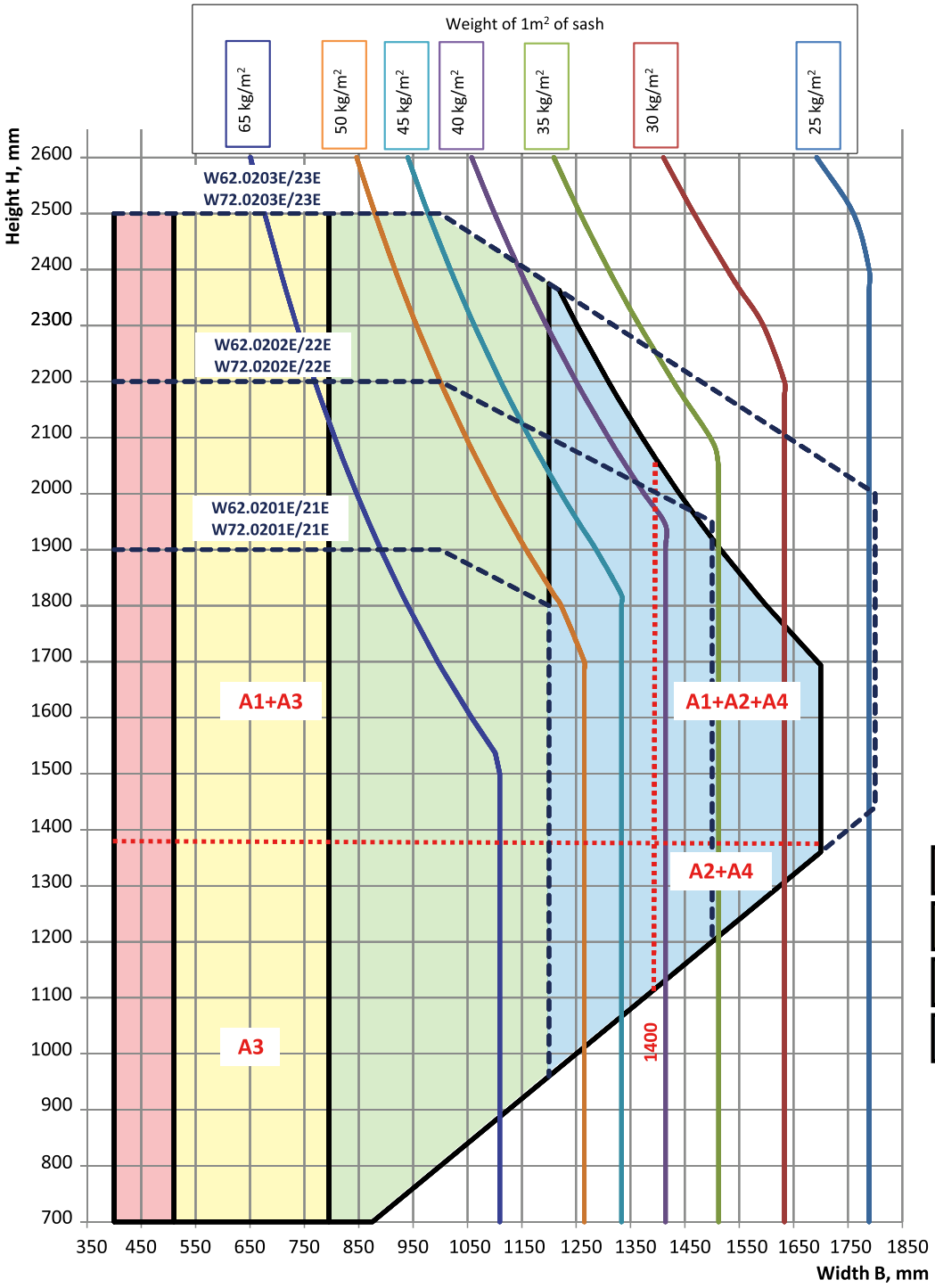

A1 – 6 locking points kit
A2 – 8 locking points kit

A3 – main kit with vertical latches
A4 – main kit with corner switch

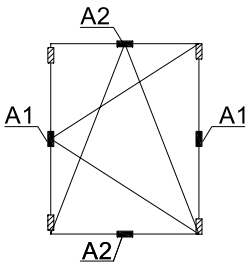

RIBANTA 5 kits

A1- 3200.820 R/L - 6 locking points kit
A2 - 3200.825 R/L - 8 locking points kit
A3 - 3200.20R/L - main kit with vertical latch
A4 - 3200.22R/L - main kit with corner switch

Short compass arm - 3200.770R/L

Medium compass arm - 3200.771R/L

Large compas arm - 3200.772R/L

Addit. compass arm - 3200.800R/L

Hinges kit - 3200.729

- short compass arm area of use
- medium compass arm area of use
- large compass arm area of use
- large and addit. compass arm ara of use
- area of use of locking points
- sash profiles areas of use
- area of possible manufacturing of units from ALT profiles ALT with SAVIO hardware

Diagram for selection of sash dimensions and tilt and turn hardware kits SAVIO Ribanta 5

(hinges kit for loads from 110 up to 170 kg)

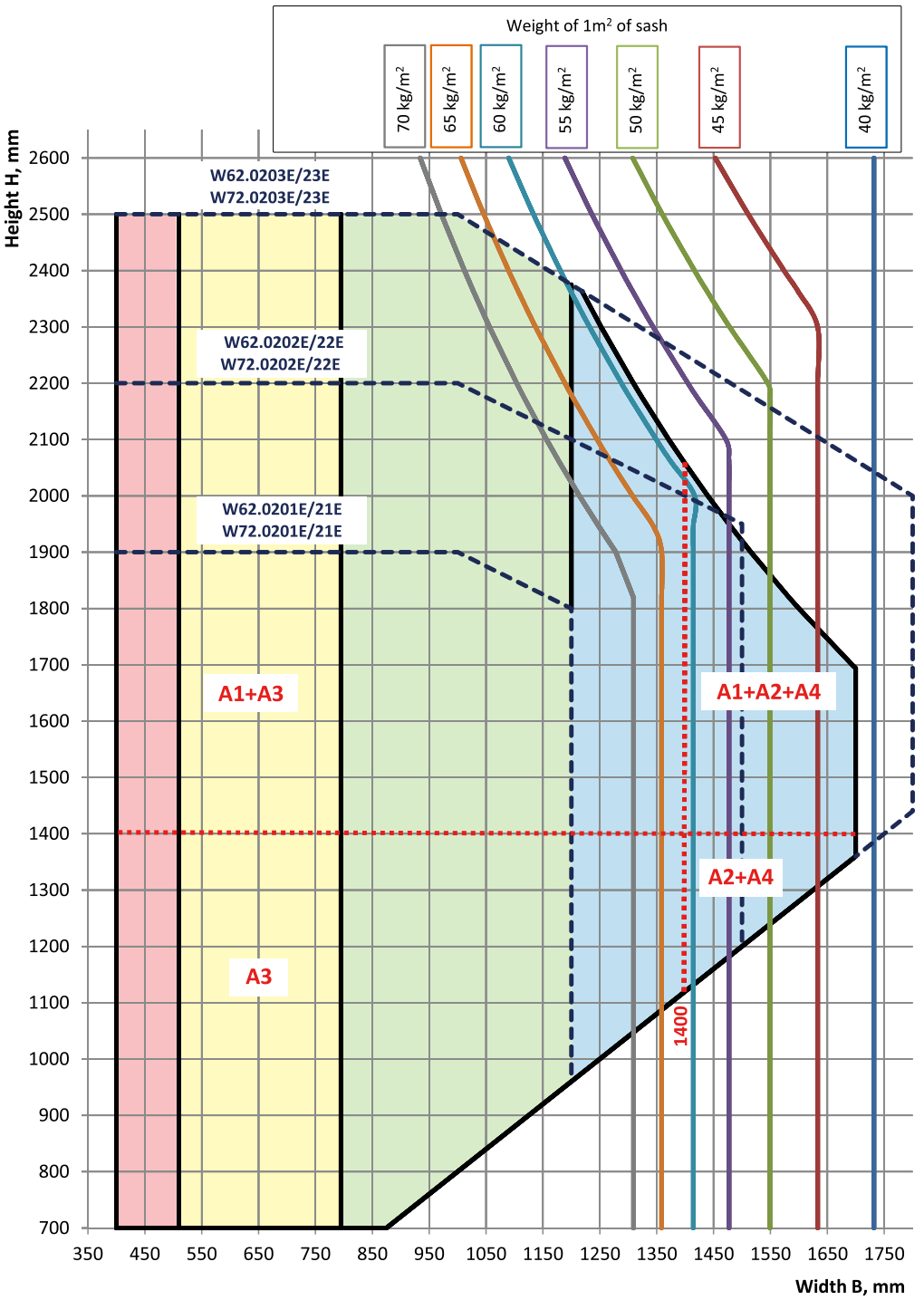

A1 – 6 locking points kit
A2 – 8 locking points kit

A3 – main kit with vertical latches
A4 – main kit with corner switch

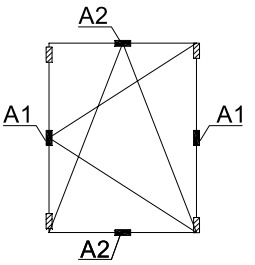

RIBANTA 5 kits

A1- 3200.820 R/L - 6 locking points kit
A2 - 3200.825 R/L - 8 locking points kit
A3 - 3200.20R/L - main kit with vertical latch
A4 - 3200.22R/L - main kit with corner switch

Short compass arm - 3200.770R/L

Medium compass arm - 3200.771R/L

Large compas arm - 3200.772R/L

Addit. compass arm - 3200.800R/L

Hinges kit - 3200.729

- short compass arm area of use
- medium compass arm area of use
- large compass arm area of use
- large and addit. compass arm ara of use
- area of use of locking points
- sash profiles areas of use
- area of possible manufacturing of units from ALT profiles ALT with SAVIO hardware

Diagram for selection of sash dimension with ALT W62 profiles and casement hardware kits SAVIO Anta 5 (with Giesse hardware article 00120N)

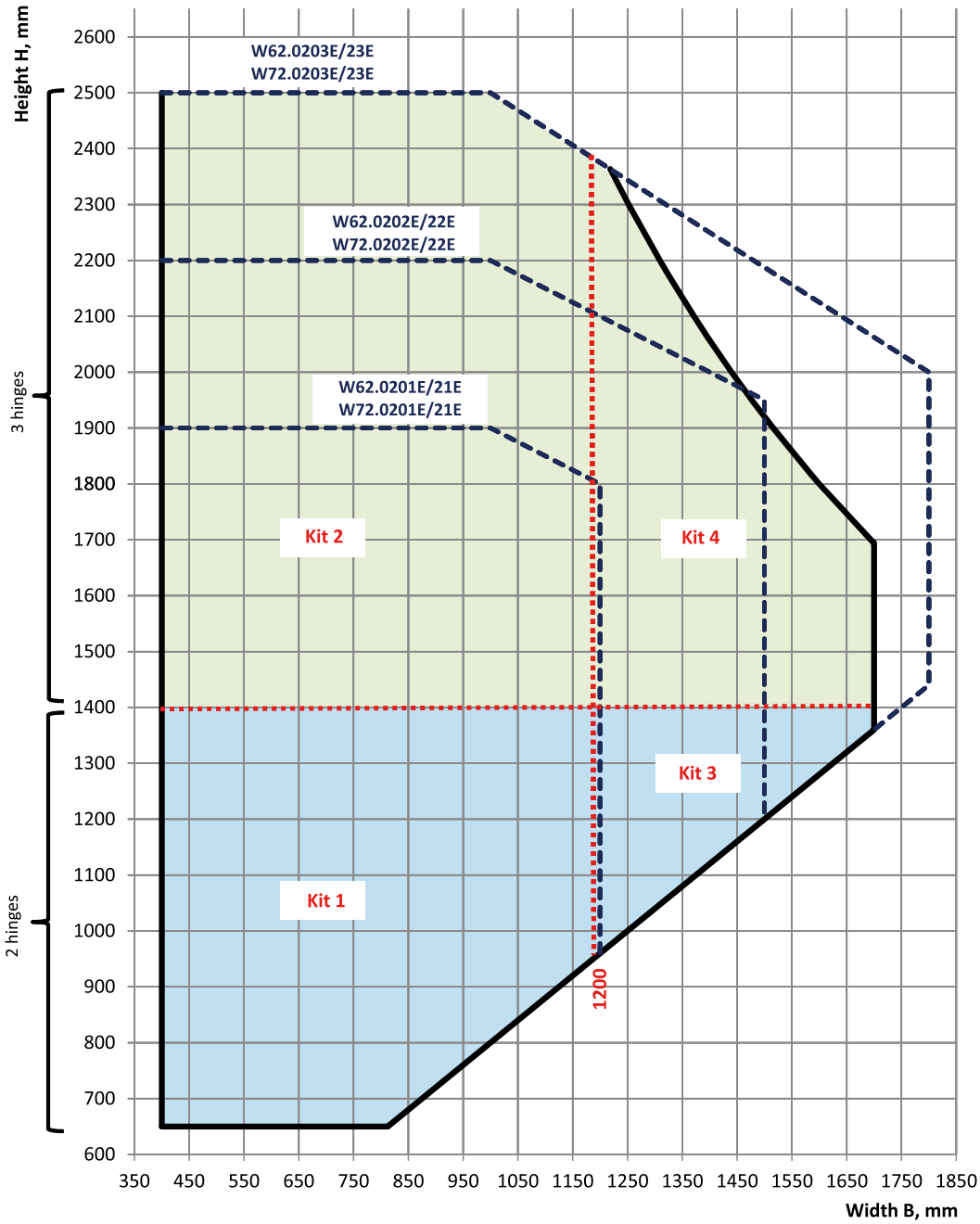

Anta 5 kit

Kit 1
873.1 - handle - 1pcs
3200.600 R/L - casement window kit - 1pcs
1410.705 - upper stopper-support - 2pcs
50222990 - lower stopper-support - 1pcs
W62.0601 - 1200 mm

Kit 2
873.1 - handle - 1pcs
3200.600 R/L - casement window kit - 1pcs
1243.721W - strike plate - 1pcs
1410.705 - upper stopper-support - 2pcs
50222990 - lower stopper-support - 1pcs
W62.0601 - 2000 mm

Kit 3
873.1 - handle - 1pcs
3200.600 R/L - casement window kit - 1pcs
3200.612 - corner switches - 1 kit
3200.615R/L - connecting rods - 1 kit
1410.705 - stopper-support - 1pcs
W62.0601 - 1200 мм - 2pcs

Kit 4
873.1 - handle - 1pcs
3200.600 R/L - casement window kit - 1pcs
1243.721W - strike plate - 1pcs
3200.612 - corner switches - 1 kit
3200.615R/L - connecting rods - 1 kit
1410.705 - upper stopper-support - 1pcs
W62.0601 - 2000 мм - 2pcs

sash weight up to 75 kg

sash weight up to 85 kg

areas of use of hardware kits

sash profiles areas of use

area of possible manufacturing of units from ALT profiles ALT with STUBLINA hardware

Diagram for selection of sash dimension and SAVIO hardware kits for hopper windows

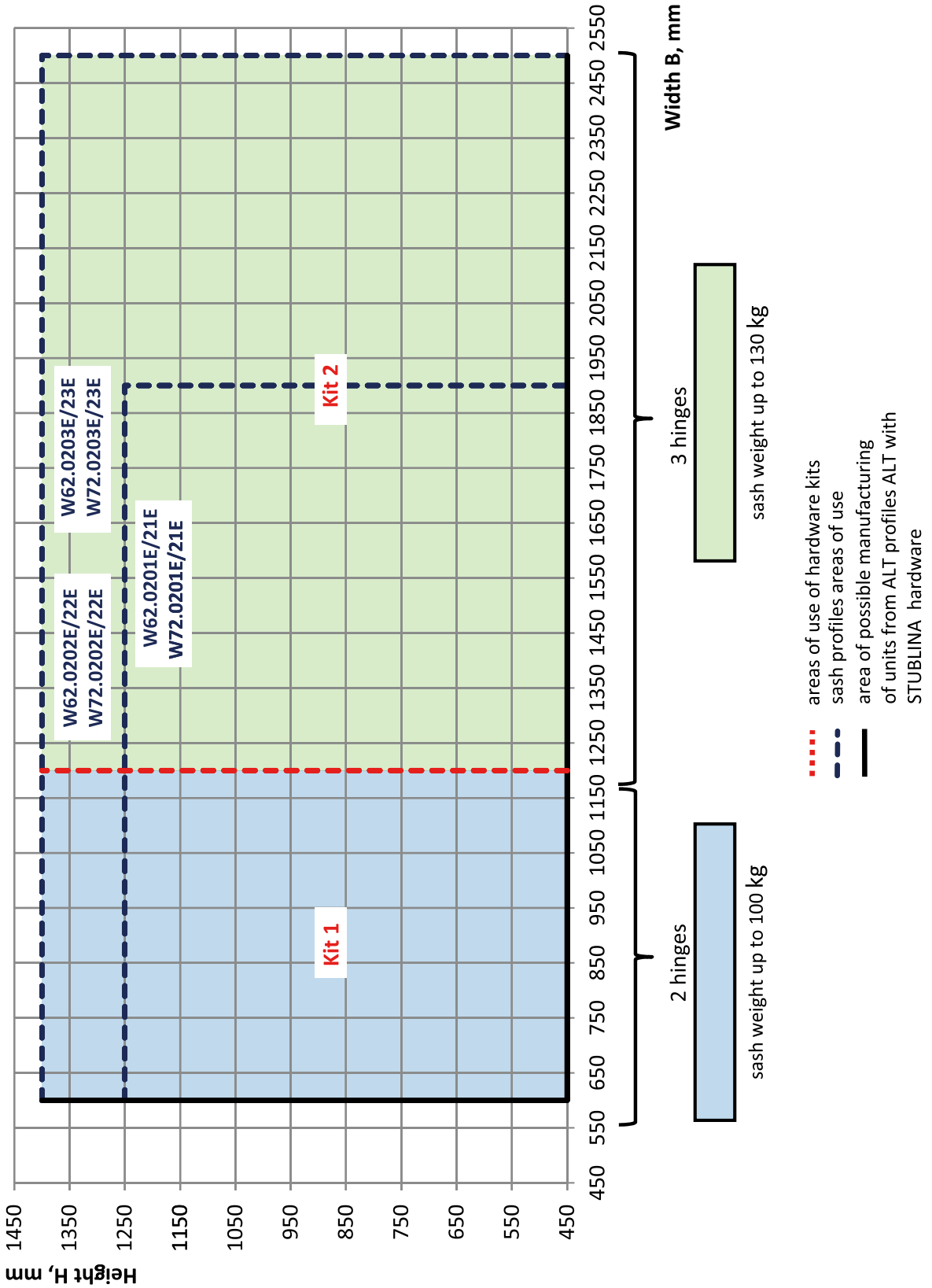

SAVIO hardware kits

Kit 1
873.1 - handle - 1pcs
3200.600 R - casement window kit - 1pcs
1410.705 - upper stopper-support - 1pcs
1341 - opening stop - 2pcs
1122.200/201 - hinge - 2pcs
W62.0601 - 1200 mm

Kit 2
873.1 - handle - 1pcs
3200.600 R - casement window kit - 1pcs
1243.721W - strike plate - 1pcs
1410.705 - upper stopper-support - 1pcs
1341 - opening stop - 2pcs
1122.200/201 - hinge - 3pcs
W62.0601 - 1200 mm

Diagram for selection of sash dimensions and tilt and turn hardware kits STUBLINA 4030.00 (hinges kit for load up to 80 kg) for ALT W62 windows

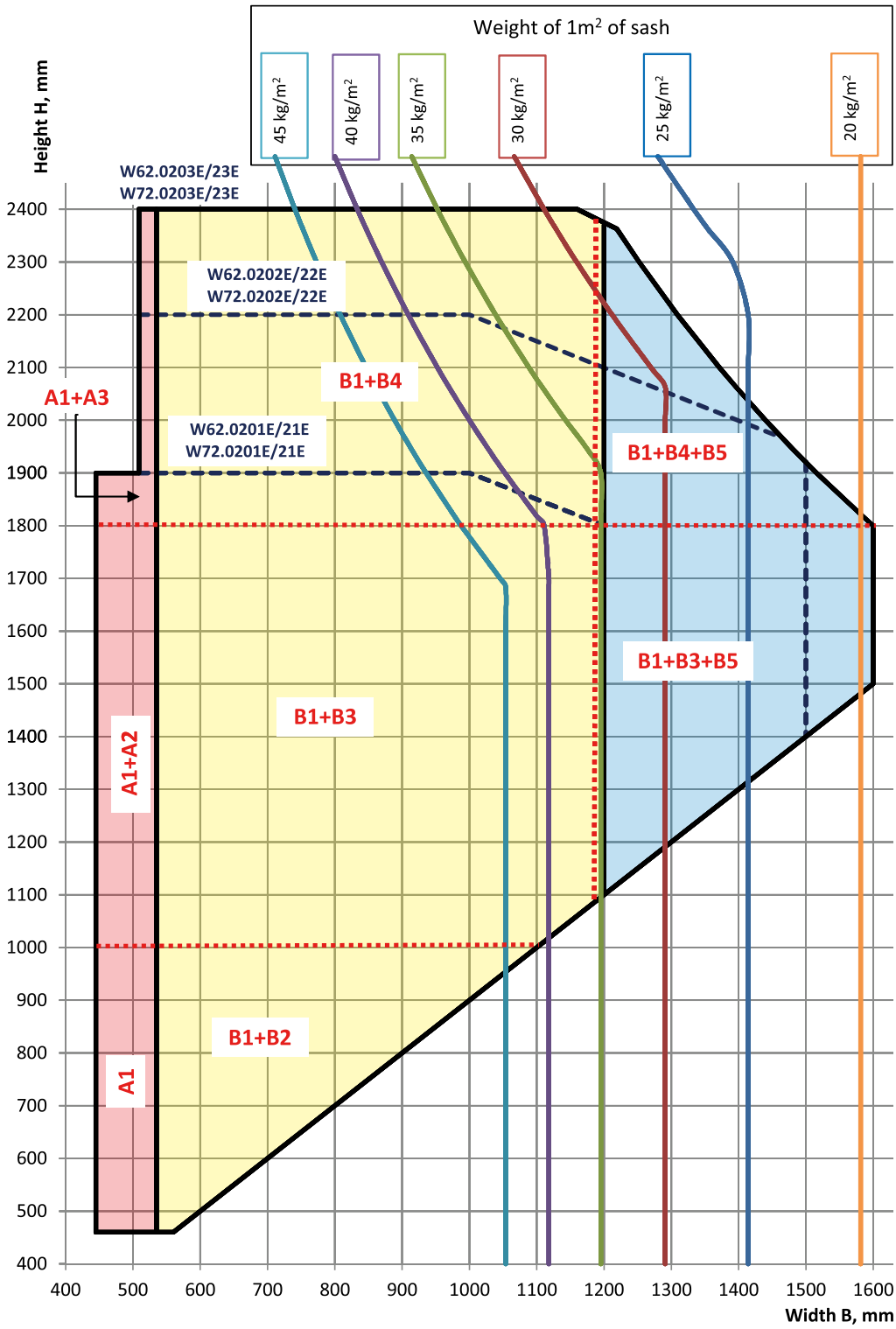

STUBLINA kits

A1
- 1001.00 handle with fastening (1 pcs)
- 4030.01 short compass (1 pcs)
- 4010.10 basic kit (1 pcs)
- 4035.30 hinges kit (1 kit)
- 4010.20 corner switch (1 pcs)

A2
- 4003.00 locking point (2 pcs)

A3
- 4003.00 locking poing (3 pcs)
- 4010.40 addit. corner switch and catch (1 pcs)

B1
- 1001.00 handle with fastening (1pcs)
- 4030.02 medium compass (1 pcs)
- 4010.10 basic kit (1 pcs)
- 4035.30 hinges kit (1 kit)
- 4010.20 corner switch (1 pcs)

B2
- 4003.00 locking point (2 pcs)
- 4010.40 addit. corner switch and catch (1 pcs)

B3
- 4003.00 locking point (2 pcs)
- 4010.40 addit. corner switch and catch (2 pcs)

B4
- 4003.00 locking point (3 pcs)
- 4010.40 addit. corner switch and catch (2 pcs)

B5
- 4010.50 addit. compass (1 pcs)

short compass arm area of use

medium compass arm area of use

medium and addit. compass arm area of use

areas of use of hardware kits

sash profiles areas of use

area of possible manufacturing of units from ALT profiles ALT with STUBLINA hardware

* micro ventilation is as an option 4010.60 (1 pcs)

Diagram for selection of sash dimensions and tilt and turn hardware kits STUBLINA 4010.00 (hinges kit for load up to 100 kg) for ALT W62 windows

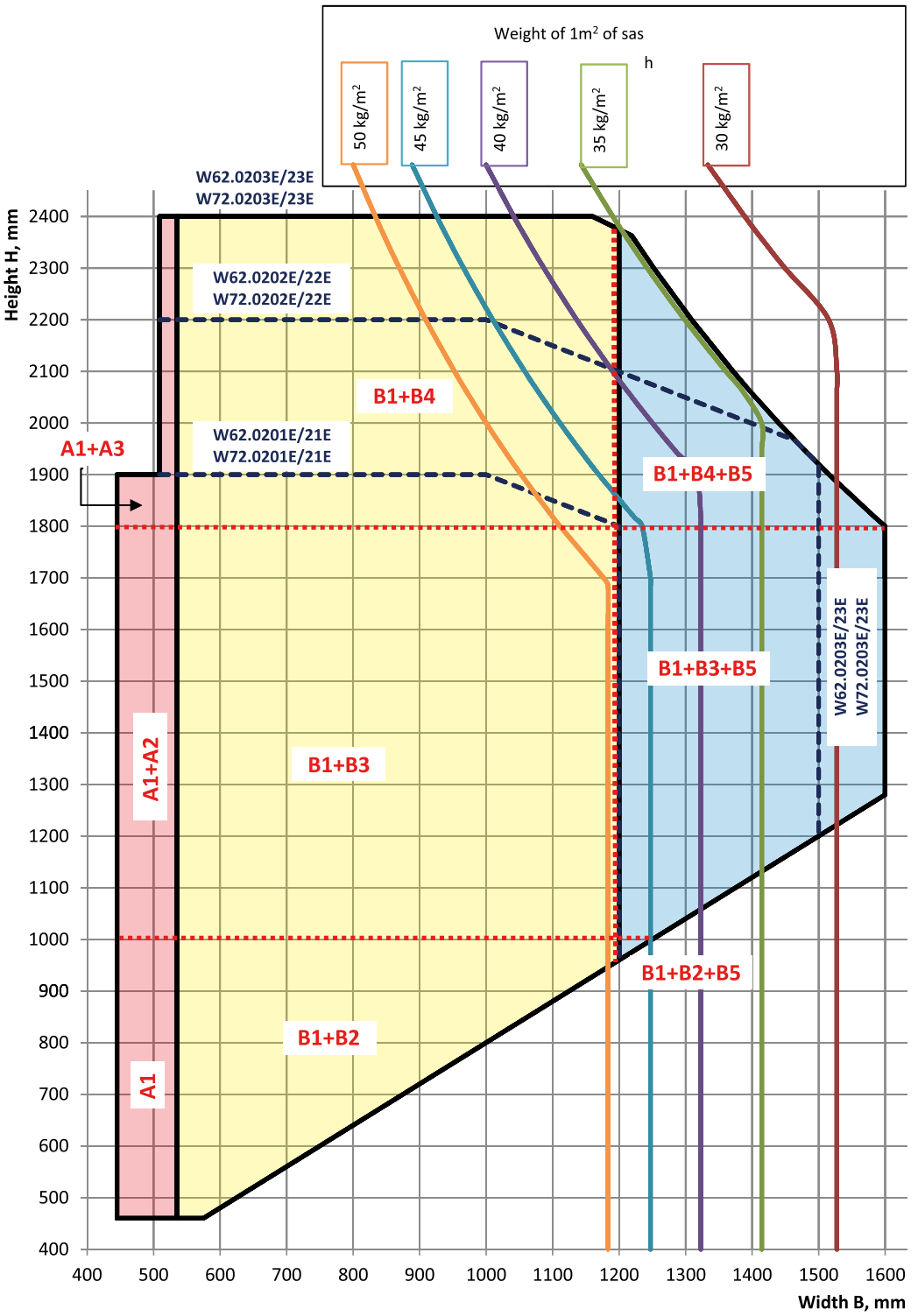

STUBLINA kits

A1
- 1001.00 handle with fastening (1 pcs)
- 4010.01 short compass (1 pcs)
- 4010.10 basic kit (1 pcs)
- 4010.30 hinges kit (1 kit)
- 4010.20 corner switch (1 pcs)

A2
- 4003.00 locking point (2 pcs)

A3
- 4003.00 locking poing (3 pcs)
- 4010.40 addit. corner switch and catch (1 pcs)

B1
- 1001.00 handle with fastening (1pcs)
- 4010.02 medium compass (1 pcs)
- 4010.10 basic kit (1 pcs)
- 4010.30 hinges kit (1 kit)
- 4010.20 corner switch (1 pcs)

B2
- 4003.00 точка запирания (2 шт.)
- 4010.40 addit. corner switch and catch (1 pcs)

B3
- 4003.00 locking point (2 pcs)
- 4010.40 addit. corner switch and catch (2 pcs)

B4
- 4003.00 locking point (3 pcs)
- 4010.40 addit. corner switch and catch (2 pcs)

B5
- 4010.50 addit. compass (1 pcs)

short compass arm area of use

medium compass arm area of use

medium and addit. compass arm area of use

areas of use of hardware kits

sash profiles areas of use

area of possible manufacturing of units from ALT profiles ALT with STUBLINA hardware

* micro ventilation is as an option 4010.60 (1 pcs)

Diagram for selection of ALT W62 system sash dimensions and tilt and turn hardware kits STUBLINA (hinge 2022.00)

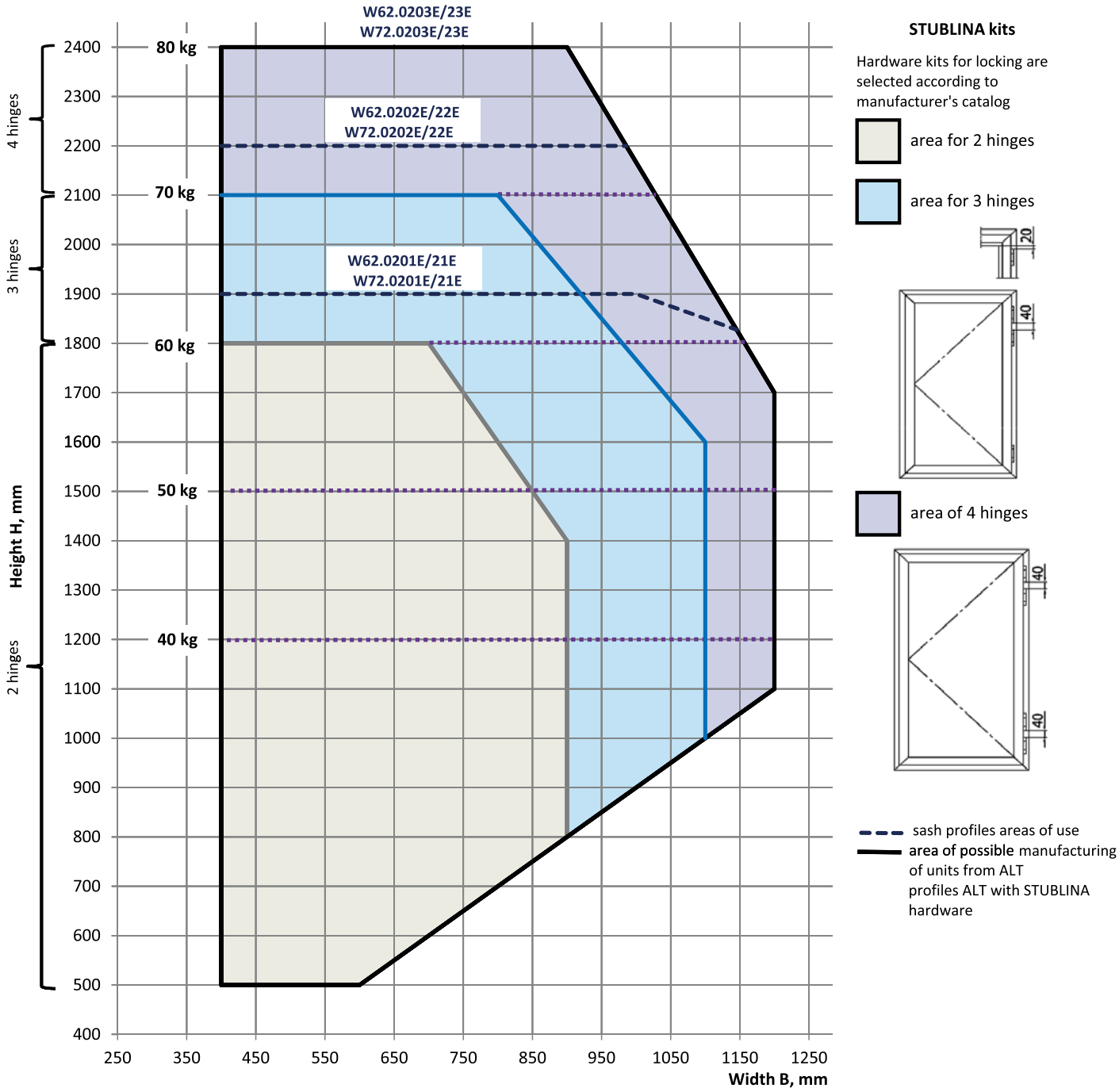

Diagram for selection of sash dimension and STUBLINA hardware kits for hopper windows ALT W62

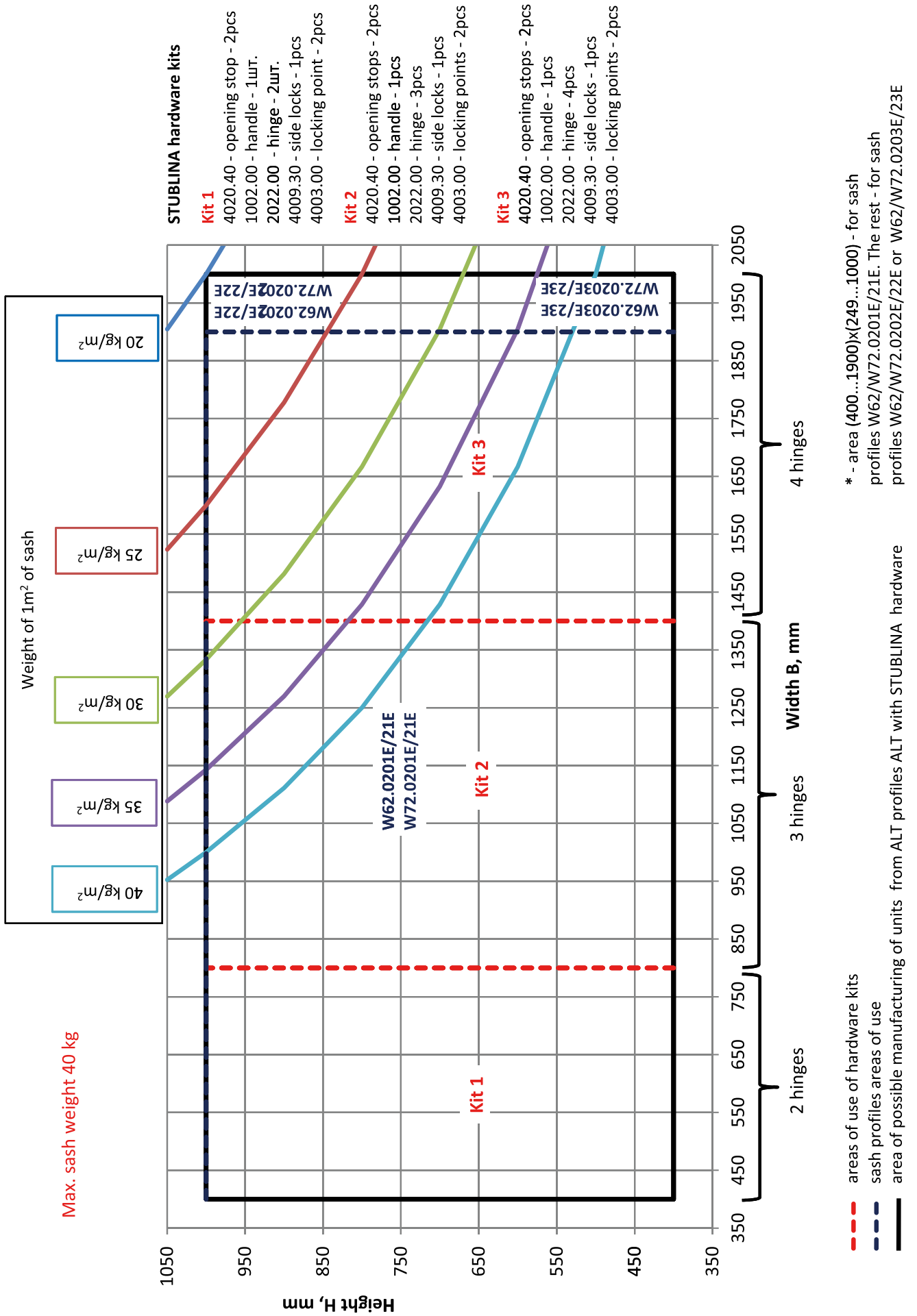

Hinges installation scheme depending on sash dimension and weight

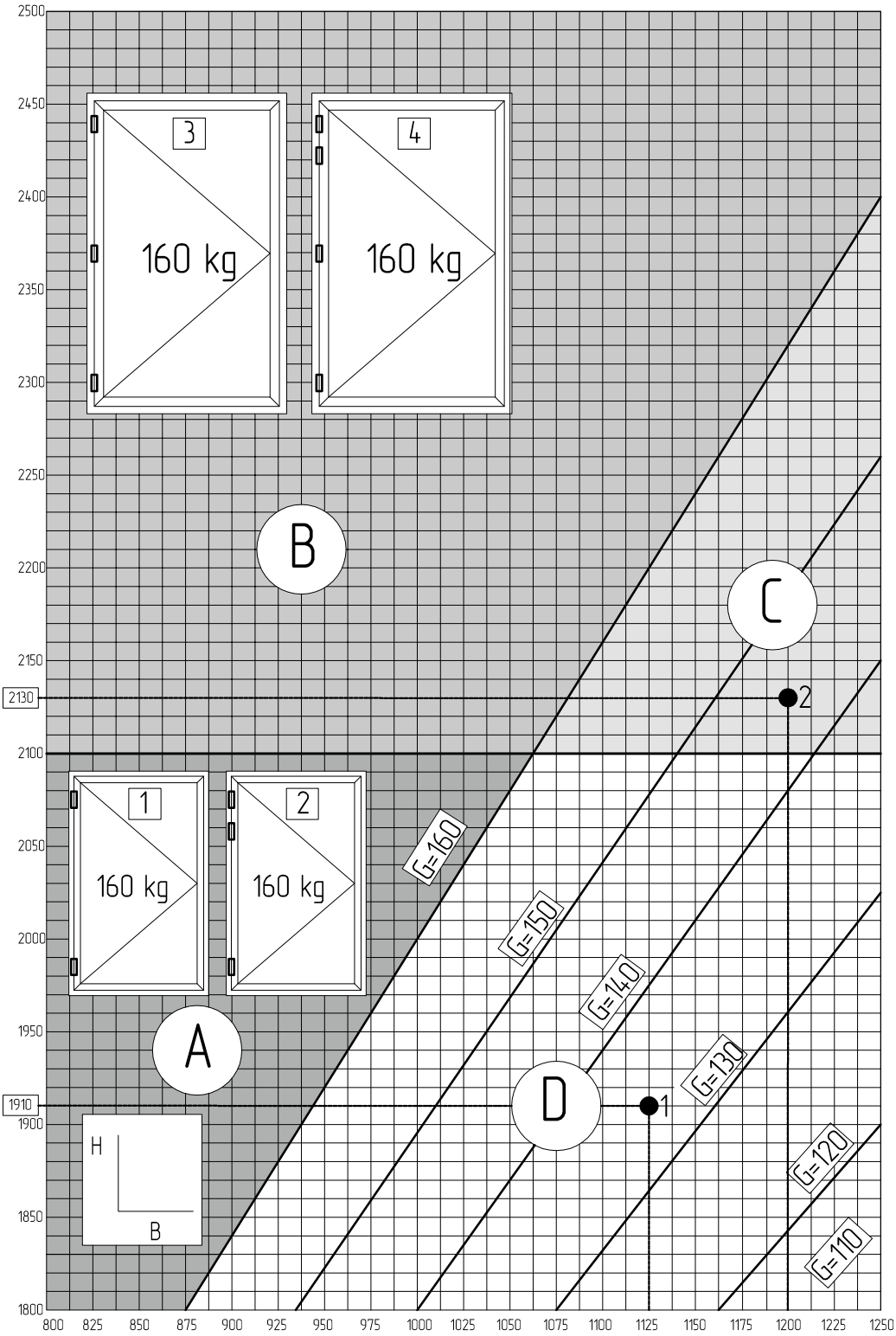

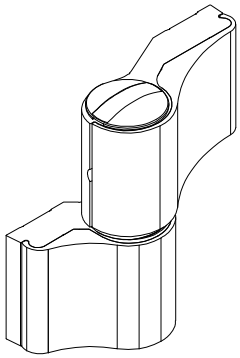

Alutech hinges

2AH67 or 3AH67

2AH92 or 3AH92

Fapim hinges

7010i or 7013i

7050Vi

For zone C

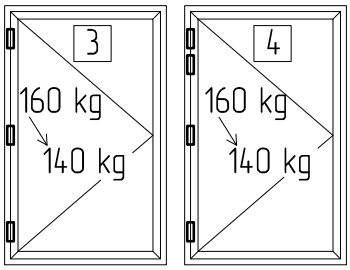

For zone D

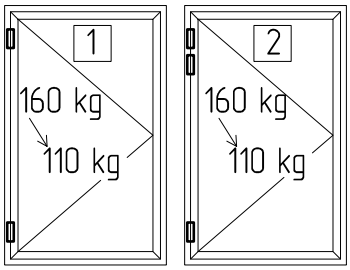

Zones A, B Max sash weight – 160 kg.

Zone D Max sash variable weight – 160 ... 110 kg depending on dimensions.

Zone C Max sash variable weight – 160 ... 140 kg depending on dimensions.

1,2,3,4 – Hinges installation options. Options 2 and 4 are used in case of intensive use of doors (example: public buildings) and use of door closers and automatic drives

Example 1. H = 1910 mm B = 1125 mm Sash weight – 135 kg (interpolation between lines G=140 and G=130)

Example 2. H = 2130 mm B = 1200 mm Sash weight – 145 kg (interpolation between lines G=150 and G=140)

Hinges installation scheme depending on sash dimension and weight

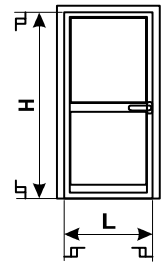

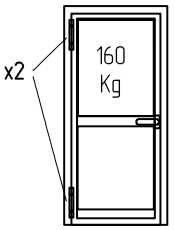

Pmax

H \ L	600	700	800	900	1000	1100	1200	1300
2500	160	160	160	160	160	160	160	
2400	160	160	160	160	160	160	160	
2300	160	160	160	160	160	160	149	
2200	160	160	160	160	160	160	136	
2100	160	160	160	160	160	146	128	
2000	160	160	160	160	160	136	120	
1900	160	160	160	160	146	126	114	
1800	160	160	160	160	293	117	107	
1700	160	160	160	144	123	110	101	
1600	160	160	160	131	114	104	96	
1500	160	160	142	120	107	98	91	
1400	160	160	128	110	101	93	88	
1300	160	141	117	102	94	88	83	
1200	160	125	107	96	90	83	X	

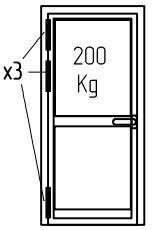

(*)

Pmax

H \ L	600	700	800	900	1000	1100	1200	1300
2500	200	200	200	200	200	200	200	
2400	200	200	200	200	200	200	200	
2300	200	200	200	200	200	200	186	
2200	200	200	200	200	200	200	170	
2100	200	200	200	200	200	182	160	
2000	200	200	200	200	200	170	150	
1900	200	200	200	200	182	158	142	
1800	200	200	200	200	366	146	134	
1700	200	200	200	180	154	138	126	
1600	200	200	200	164	142	130	120	
1500	200	200	178	150	134	122	114	
1400	200	200	160	138	126	116	110	
1300	200	176	146	128	118	110	104	
1200	200	156	134	120	112	104	X	

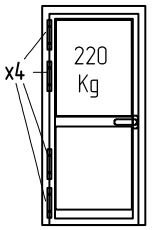

(*)

Pmax

H \ L	600	700	800	900	1000	1100	1200	1300
2500	220	220	220	220	220	220	220	
2400	220	220	220	220	220	220	220	
2300	220	220	220	220	220	220	205	
2200	220	220	220	220	220	220	187	
2100	220	220	220	220	220	200	176	
2000	220	220	220	220	220	187	165	
1900	220	220	220	220	200	174	156	
1800	220	220	220	220	403	161	147	
1700	220	220	220	198	169	152	139	
1600	220	220	220	180	156	143	132	
1500	220	220	196	165	147	134	125	
1400	220	220	176	152	139	128	121	
1300	220	194	161	141	130	121	114	
1200	220	172	147	132	123	114	X	

(*)

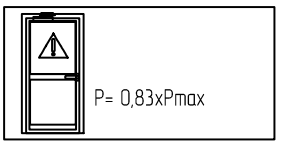

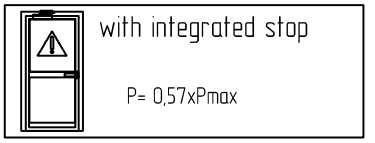

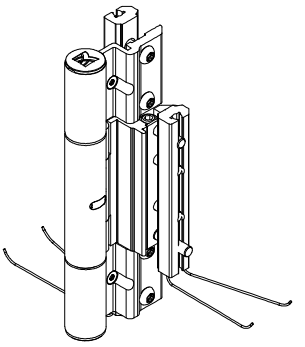

Alutech hinges

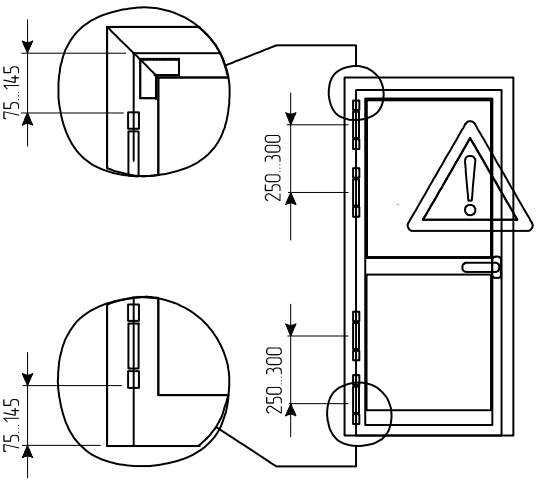

HARDWARE

12

Groove dimensions and relative positions of window frame and sash profiles

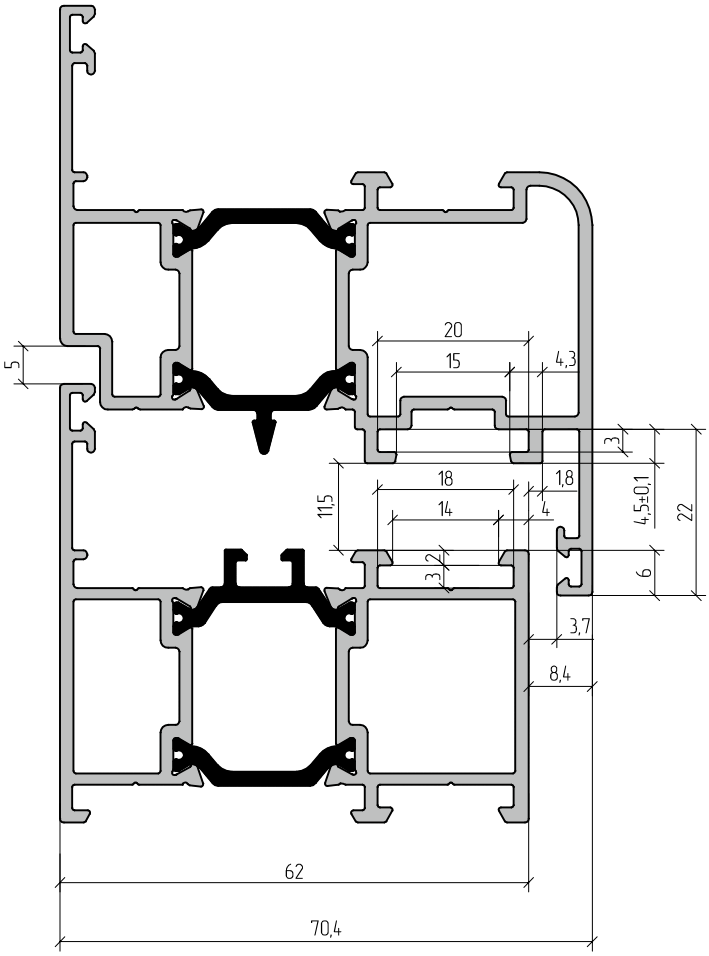

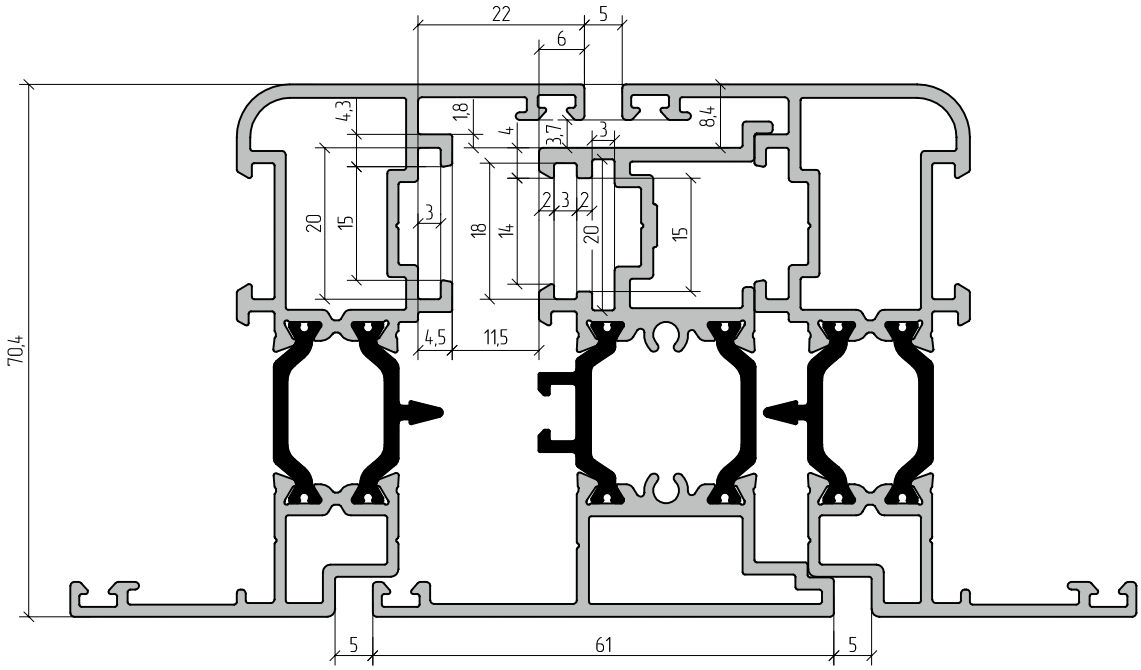

Groove dimensions and relative positions of window frame and sash profiles with PVC-groove

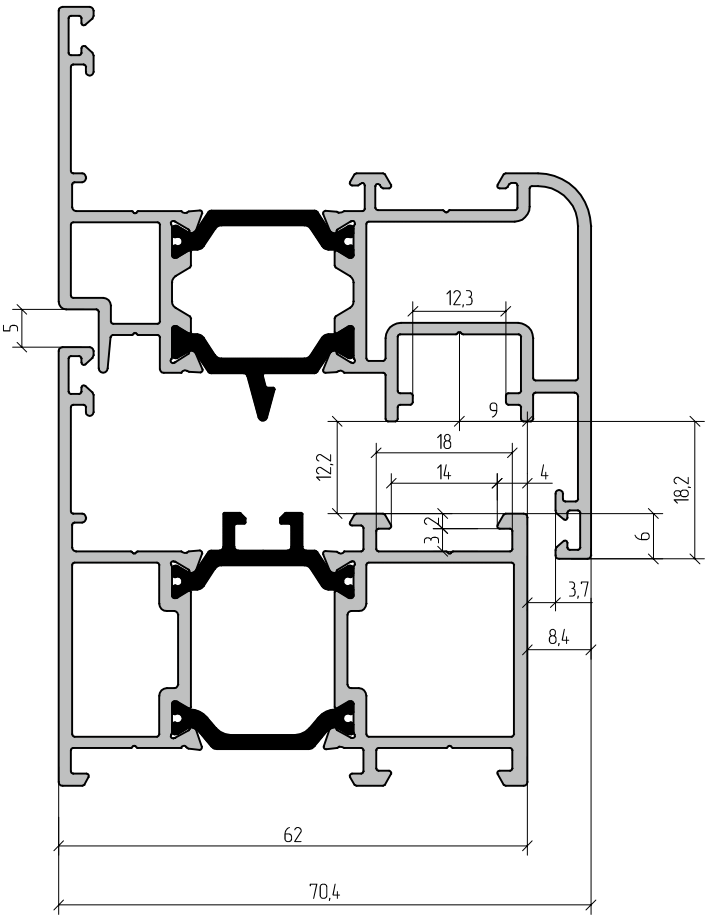

Examples of window hardware installation to sash and frame profiles

MANON 873.1 window handle

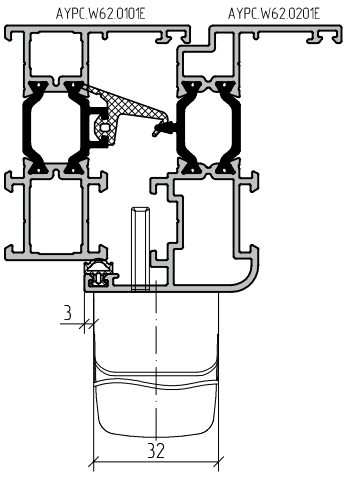

MANON 873.753 window handle

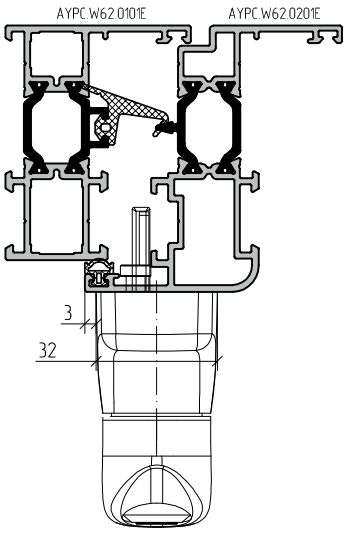

FLASH 00120 N window hinge

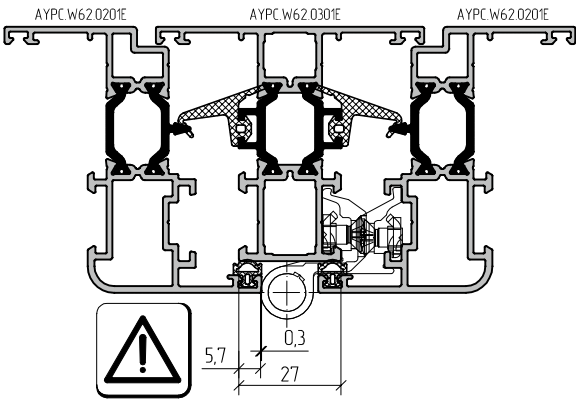

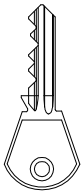

1001.00 window handle

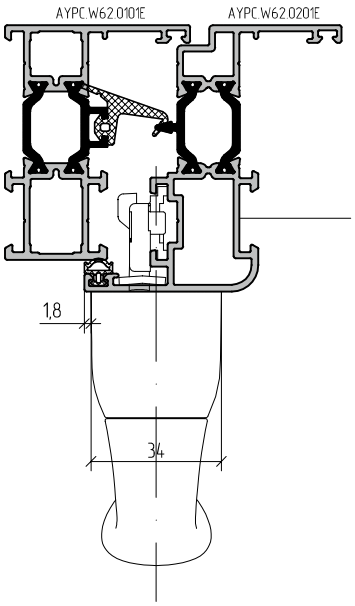

1002.00 window handle

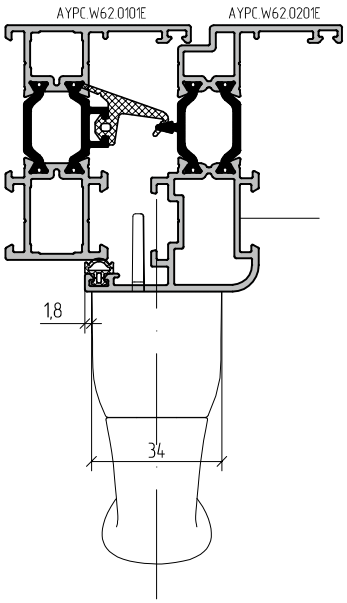

2022.00 window hinge

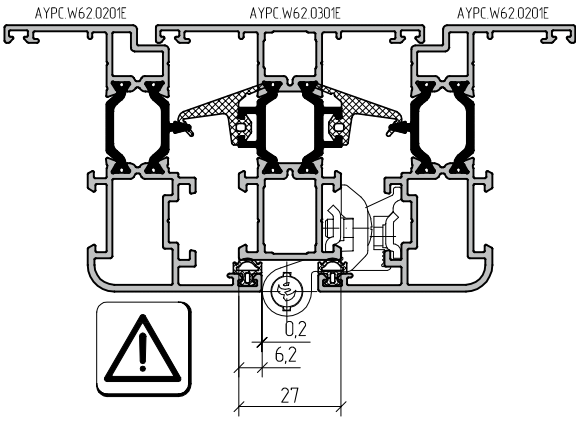

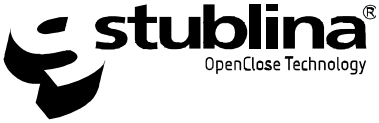

Machining of AYPC.W62.0201E,-0202E,-0203E, AYPC.W62.0221E, -0222E, -0223E sashes for installation of window hardware.

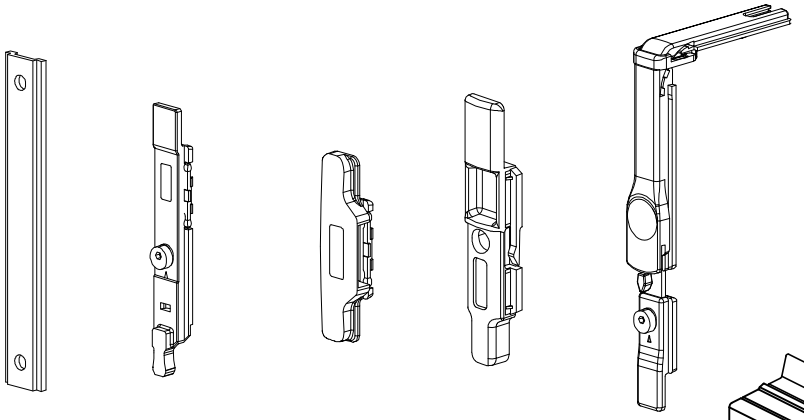

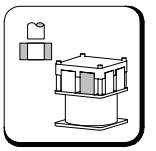

PW72.1
operation №6

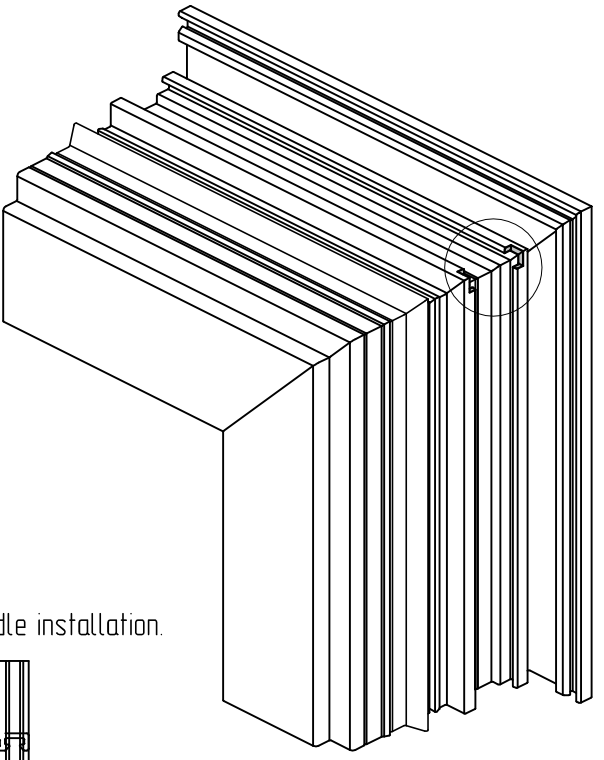

Sash machining for installation of window hardware.

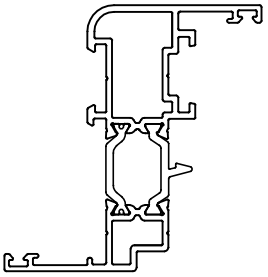

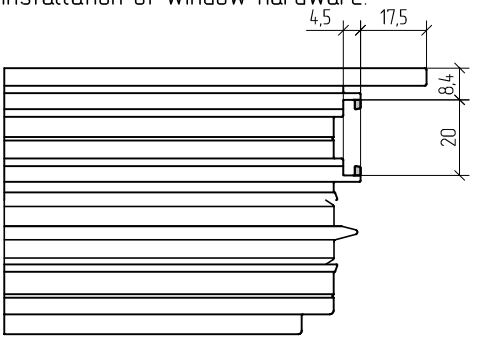

Sash machining for window handle installation.

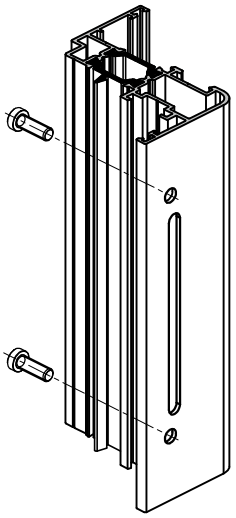

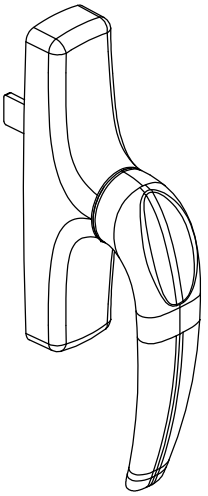

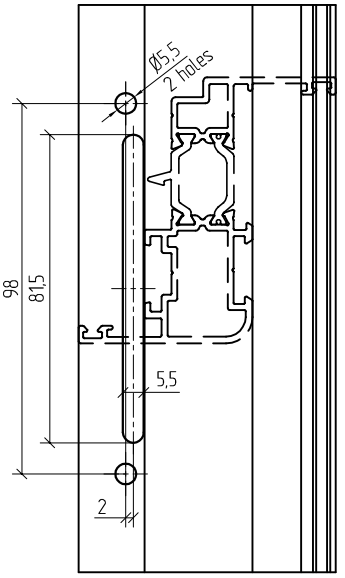

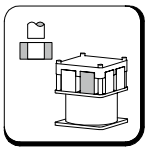

PW72.1
operation №1

AYPC.C48.0612 rod profile machining.

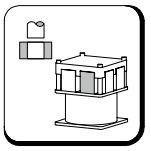

PW72.1
operation №2

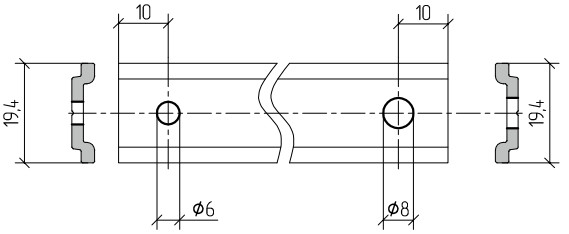

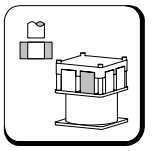

PW72.1
operation №3

Machining of AYPC.W62.0102E frame profile for hinge installation (of upper compass arm) for windows with PVC-groove hardware.

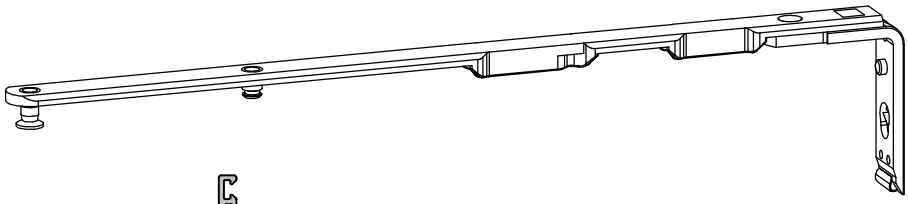

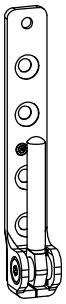

Bottom frame part of hinge

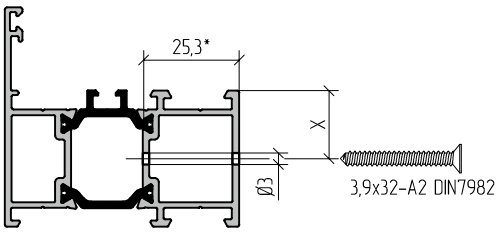

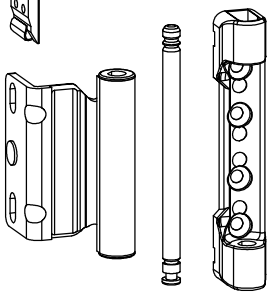

Upper hinge and compass arm

Machining for installation GU UNI-JET D

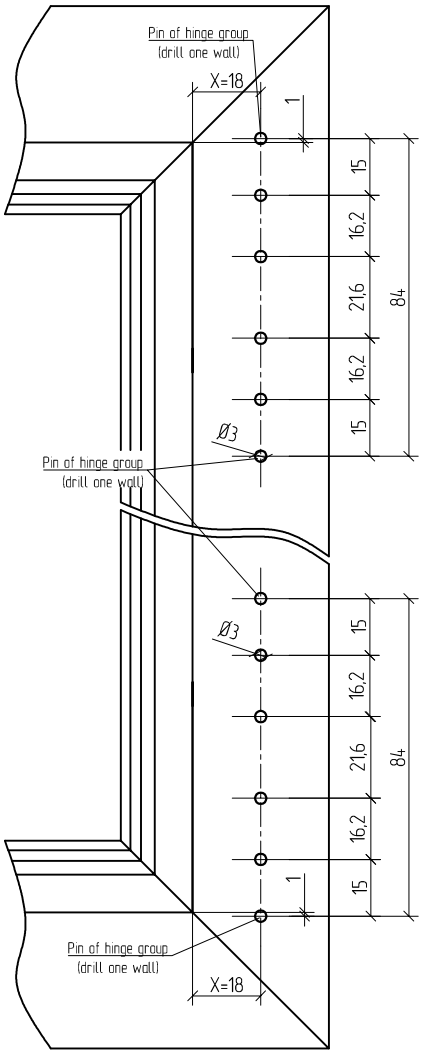

Machining for installation Sigenia AUBI

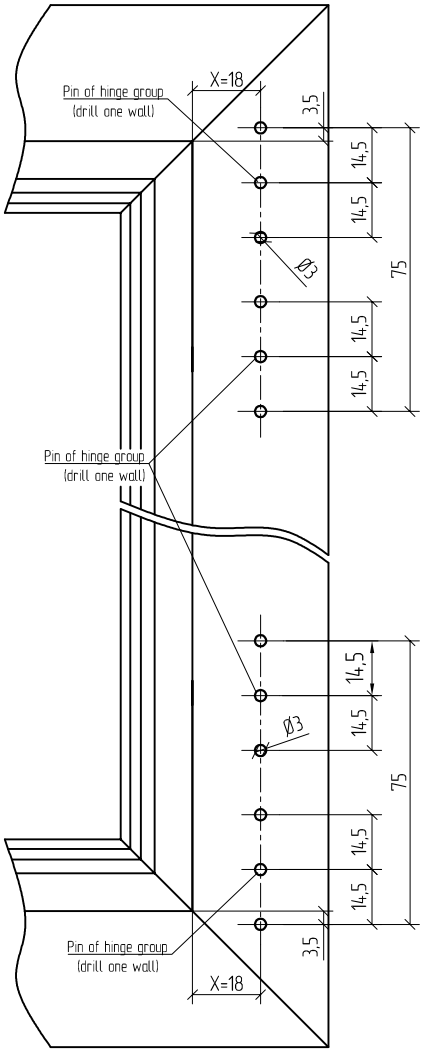

Machining for installation ROTO NT

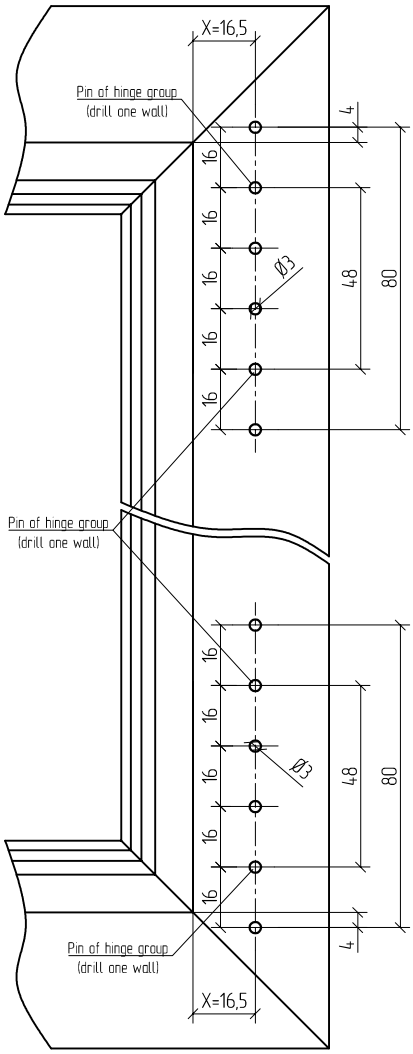

Please drill two walls of frame profile for hinge fixation. Please use templets of hardware saupliers while drilling

Machining of sash profiles: AYPC.W62.0211E and AYPC.W62.0212E for installation of window hardware into PVC-groove

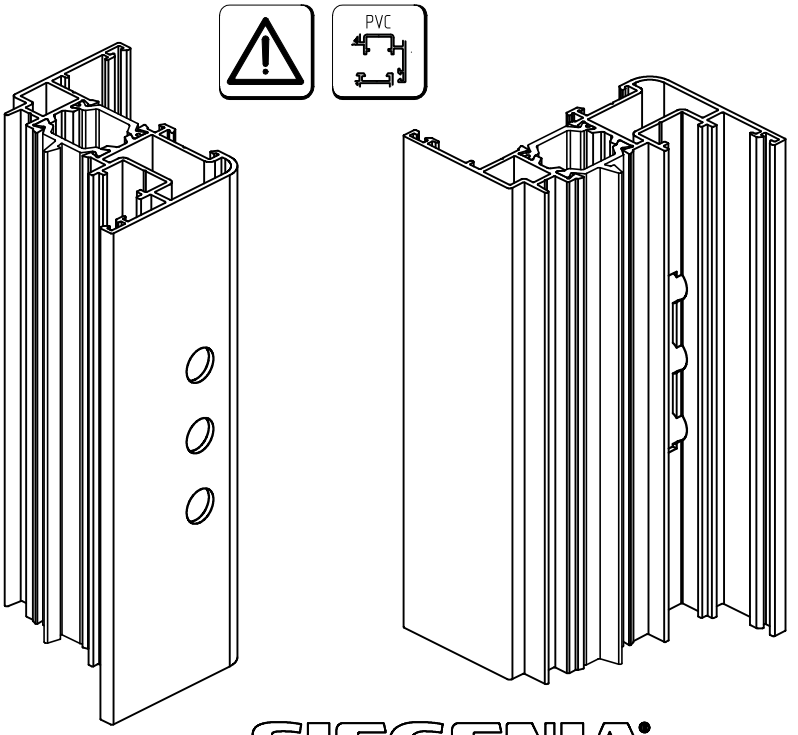

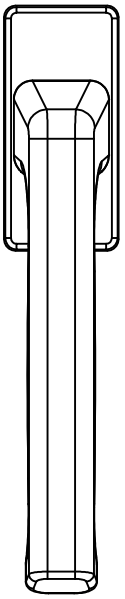

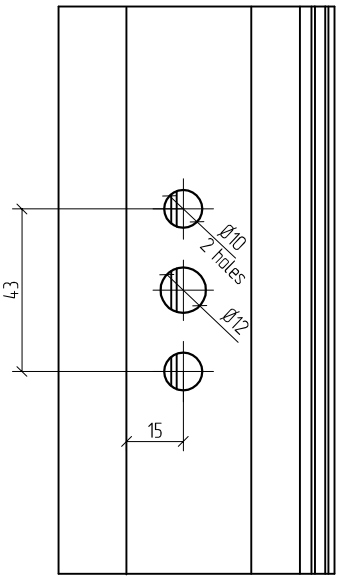

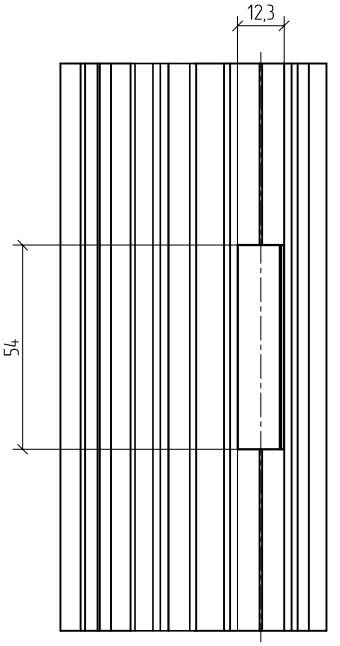

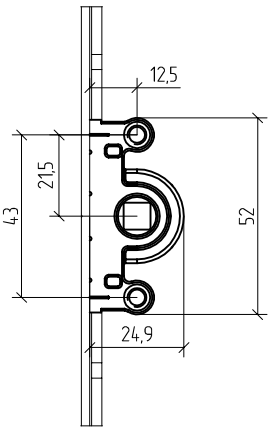

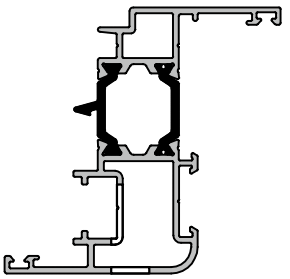

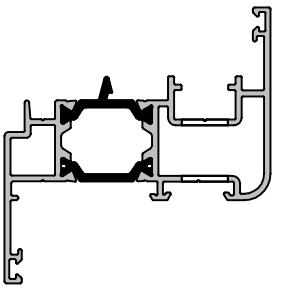

Please shape two wall of AYPC.W62.0211E sash profile for drive installation.
While machining a space for a drive and handle please use instructions of hardware suppliers

Example of profile machining for installation of LOIRA+ 7010Vi two-section face mounted hinges

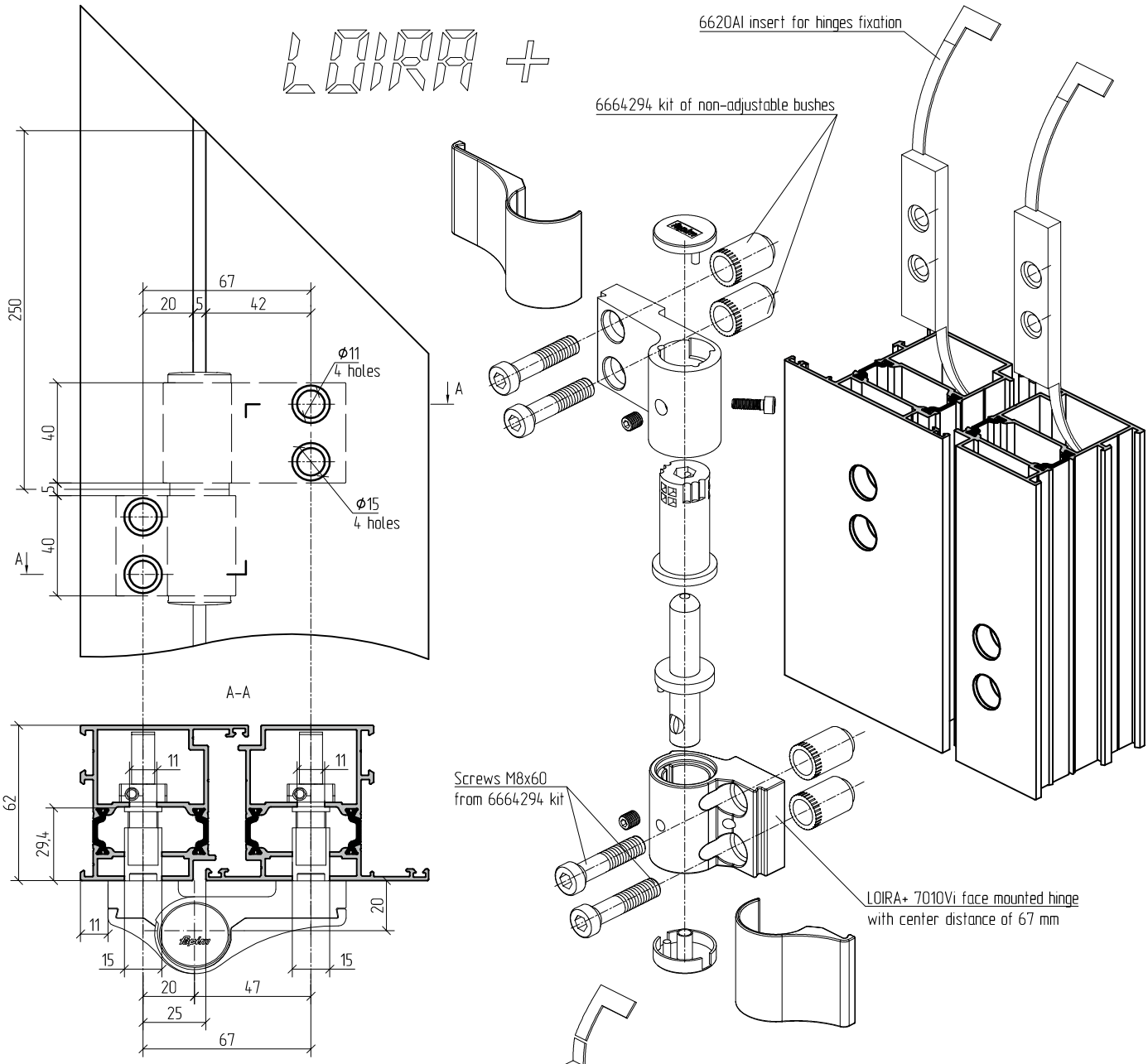

Scheme of hinge installation

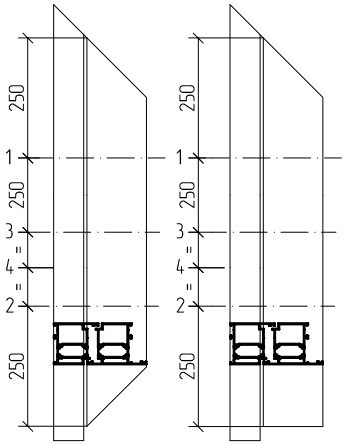

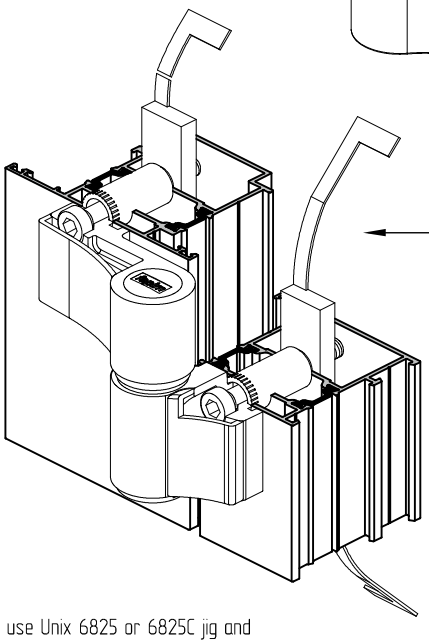

You may apply insert elements:
6665BM and 6665AM

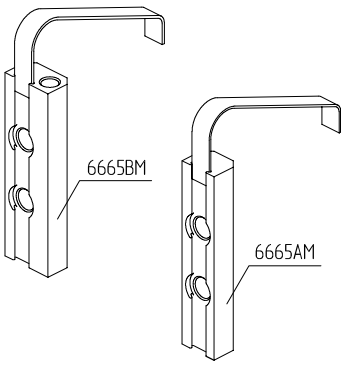

While machining profiles for hinges installation please use Unix 6825 or 6825C jig and 6873 cutter (for fixation with anchors) or 6877 cutter (for fixation with insert elements).

Examples of face mounted hinges installation on door leaf and frame profiles

outside openning

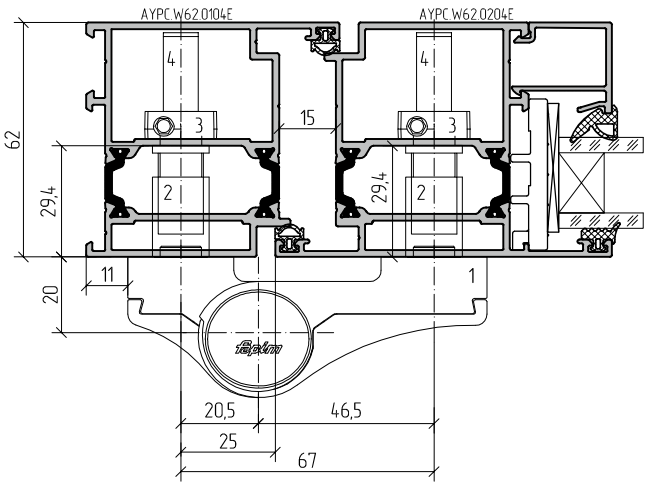

1 – LOIRA+ 7010i or 7013i face mounted hinges with center distance of 67 mm
2 – 6664294 kit of non-adjustable bushes
3 – kit of insert plates: 6620i (for 7010i) or 6621i (for 7013i)
4 – M8x60 screw from 6664294 kit

inside openning

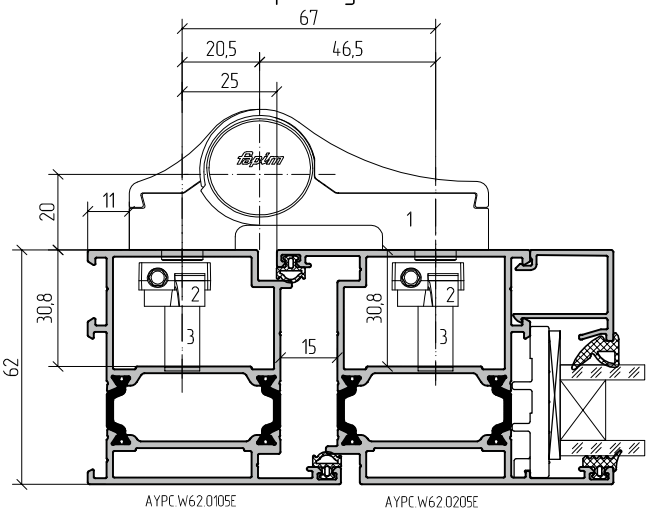

1 – LOIRA+ 7010i or 7013i face mounted hinges with center distance of 67 mm
2 – kit of insert plates: 6620i (for 7010i) or 6621i (for 7013i)
3 – M8x30 screw from 6620i (6621i) kit

outside openning

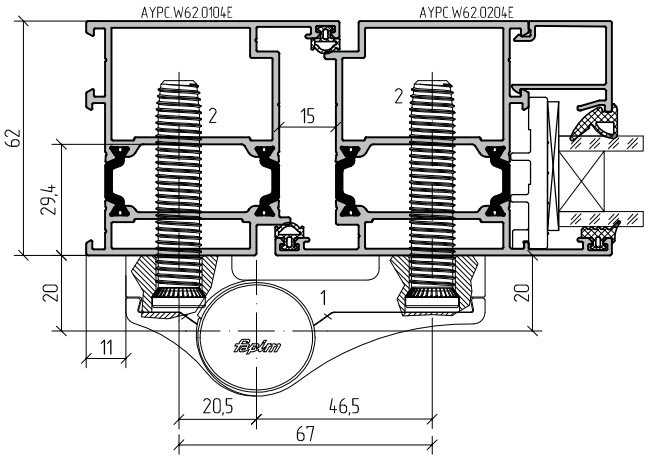

1 – LOIRA+, 7010Vi or7013Vi face mounted screw with center distance of 67 mm
2 – 6604i_z5 self-tapping screw of 60 mm

inside openning

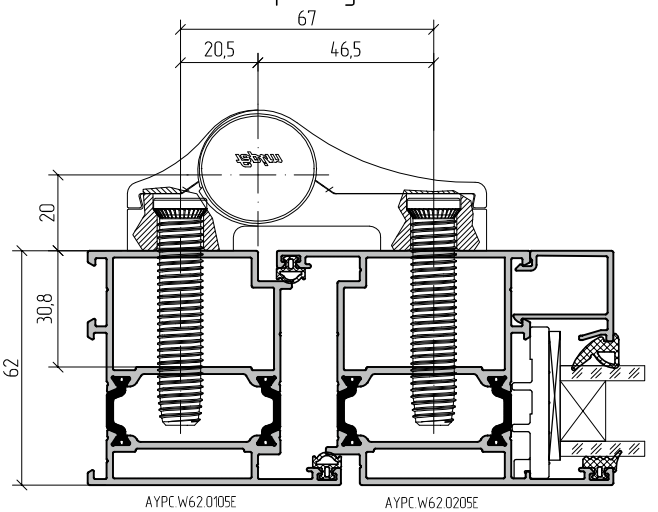

1 – LOIRA+, 7010Vi or7013Vi face mounted screw with center distance of 67 mm
2 – 6604i_z5 self-tapping screw of 60 mm

outside openning

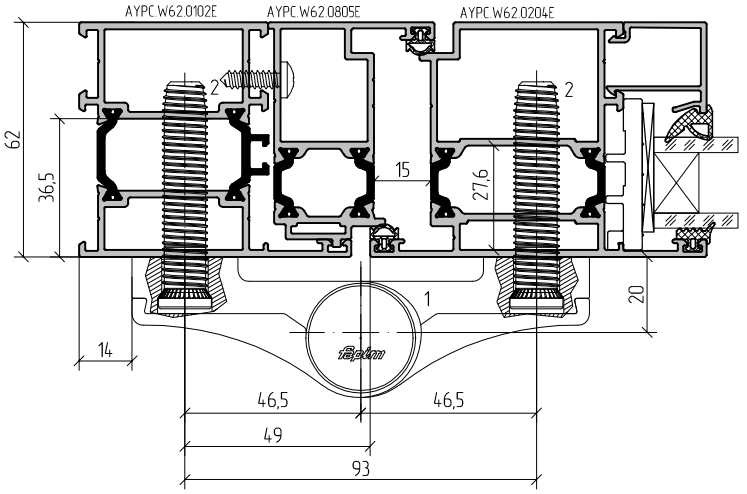

1 – LOIRA+, 7050Vi face mounted screw with center distance 93 mm
2 – 6604i_z5 self-tapping screw of 60 mm

Unix 6825 jig, holes Ø11
Unix 6825C jig, holes Ø15

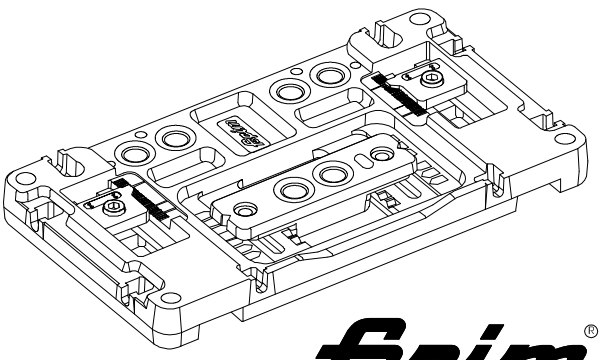

fapim® LOIRA +

Examples of face mounted hinges installation on door leaf and frame profiles

Option 1

outside openning

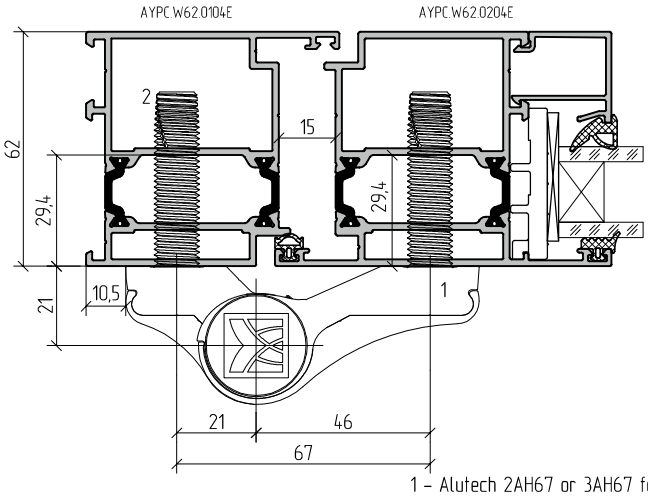

inside openning

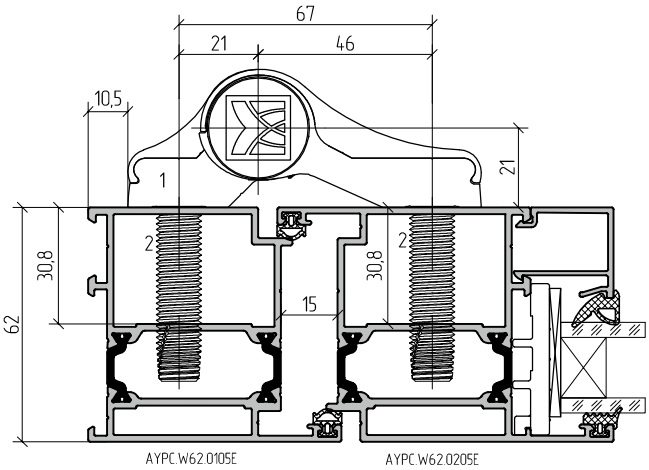

1 – Alutech 2AH67 or 3AH67 face mounted hinge with axle distance of 67 mm
2 – anchor screw L=58,5 mm from 2KAV or 3KAV kit

Option 2

outside openning

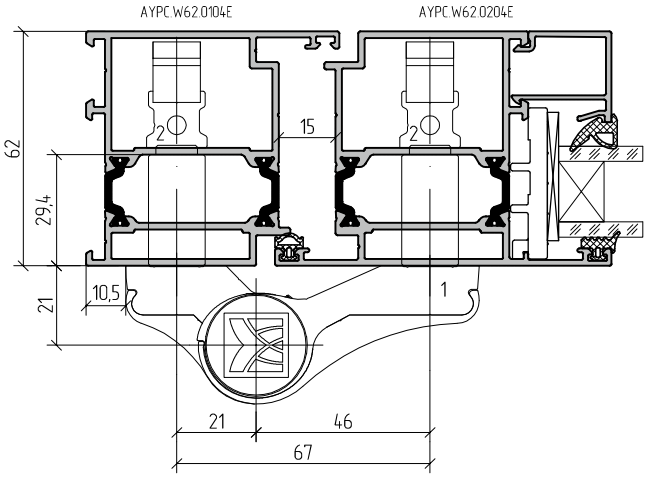

1 – 2AH67 and 3AH67 Alutech face mounted screw with center distance of 67 mm
2 – 2W art. 2VVZ or 3W art. 3VVZ fastening kit

inside openning

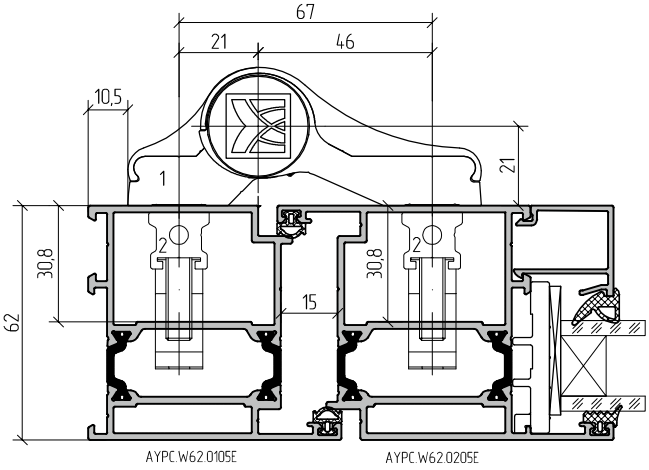

1 – Alutech 2AH67 or 3AH67 face mounted hinge with axle distance of 67 mm
2 – 2C art. 2KK or 3C art. 3KK fastening kit

outside openning

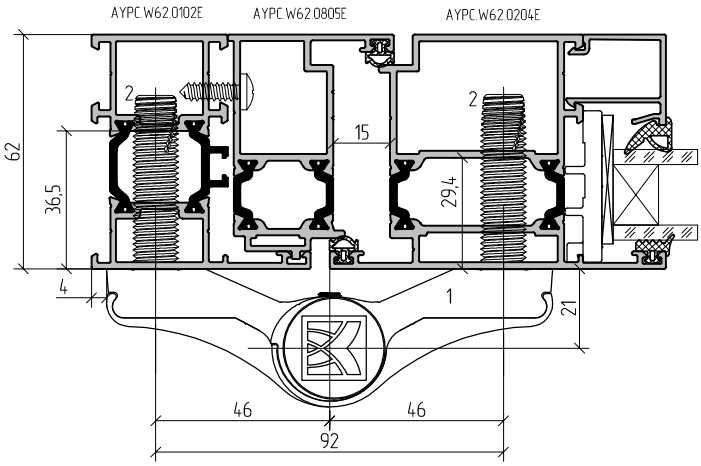

1 – Alutech 2AH92 or 3AH92 face mounted hinge with axle distance of 92 mm
2 – anchor screw L=58,5 mm from 2KAV or 3KAV kit

SHN1 jig for Alutech hinges: 2AH67, 2AH92, 3AH67, 3AH92

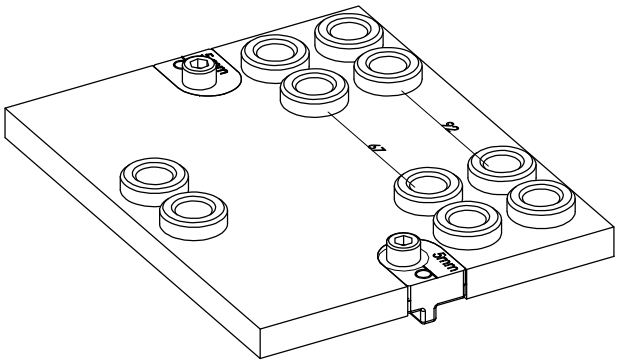

ALUTECH

Examples of roller hinges installation on leaf and frame profiles

outside openning

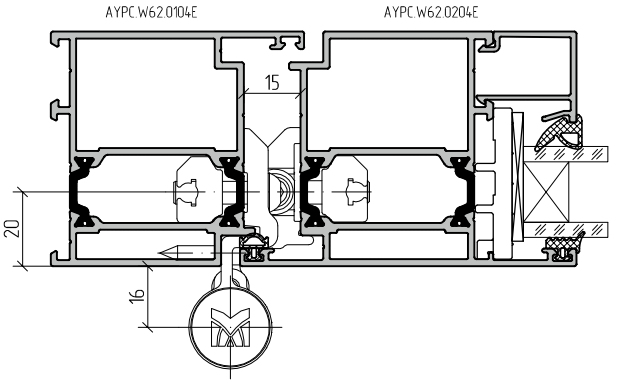

1 – R620UT Alutech roller hinge with fixation kit

inside openning

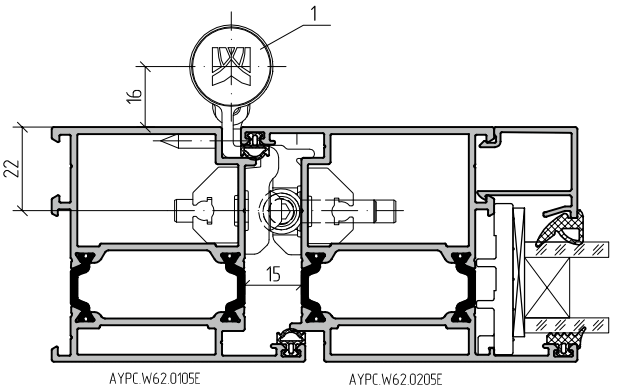

1 – R6272IN Alutech roller hinge with fixation kit

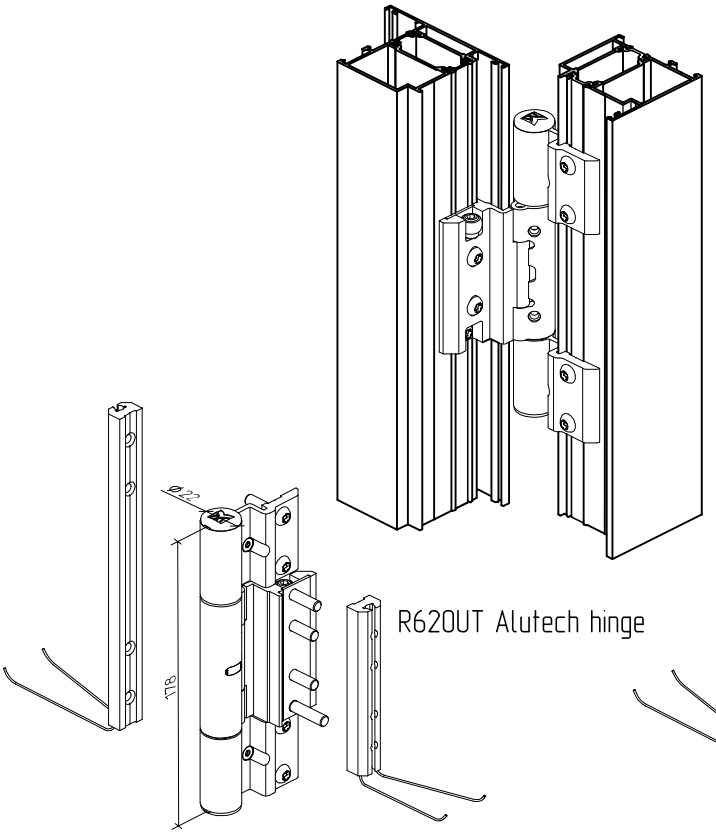

R620UT Alutech hinge

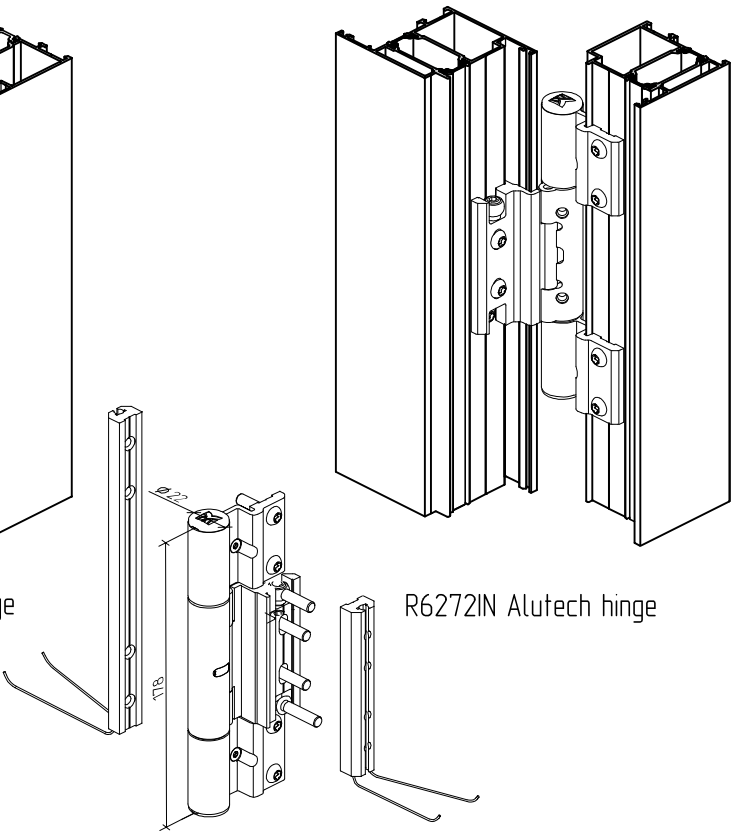

R6272IN Alutech hinge

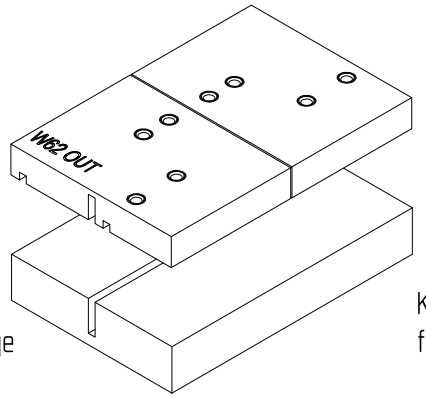

K620UT jig
for R620UT Alutech hinge

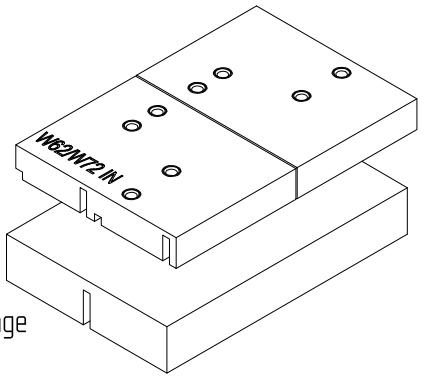

K6272IN jig
for R6272IN Alutech hinge

Scheme, installation options and hinges adjustment are shown in mounting instructions.

ALUTECH

Examples of hidden hinges installation on leaf and frame profiles

outside openning

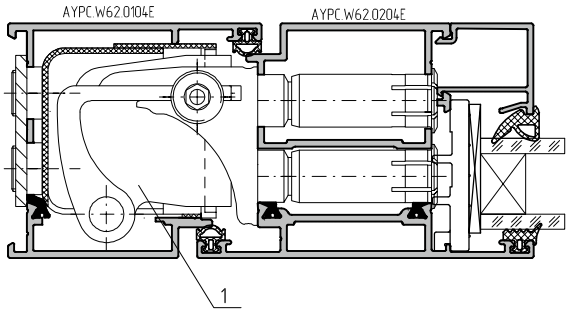

1 – V35110035 Dr.Hahn hinge

inside openning

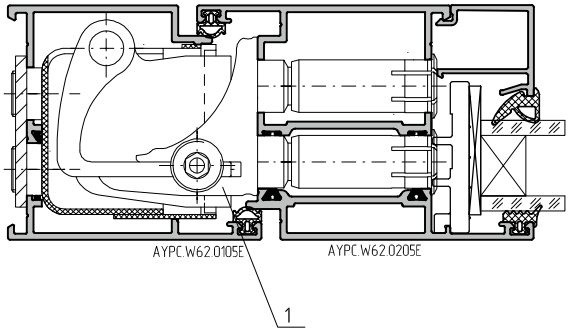

1 – V35110035 Dr.Hahn hinge

outside openning

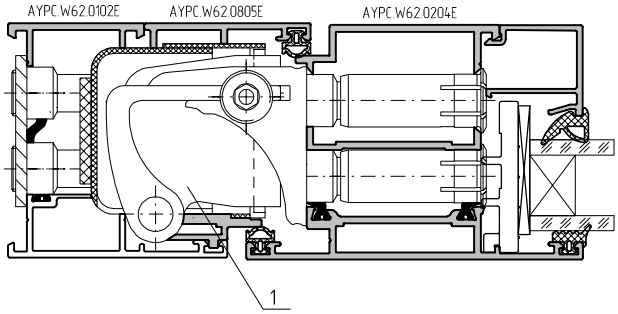

1 – V35110035 Dr.Hahn hinge

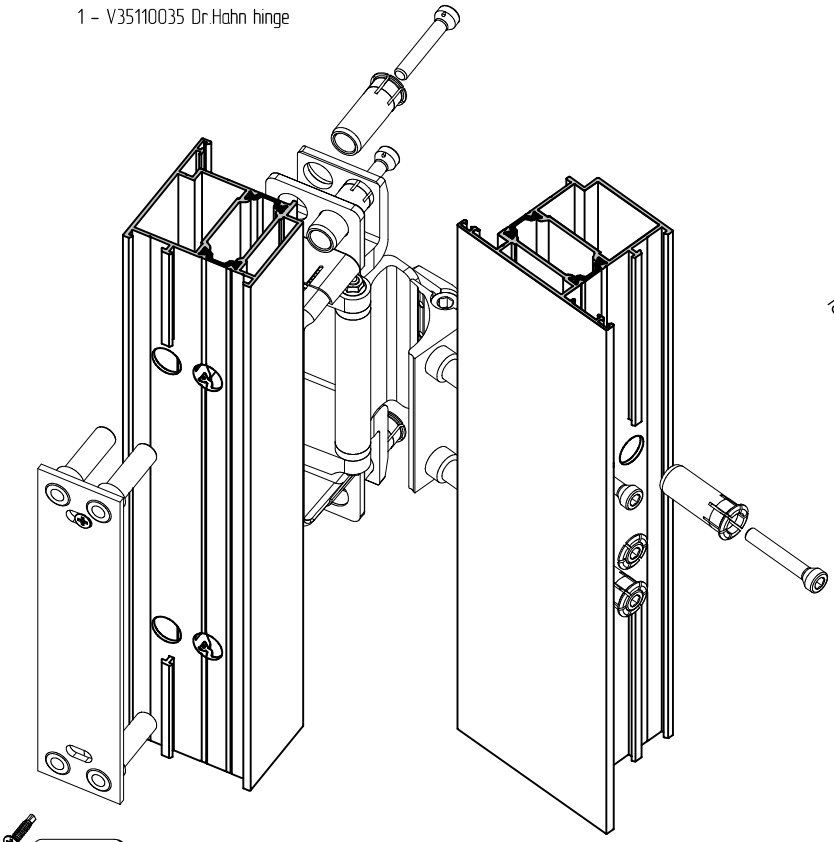

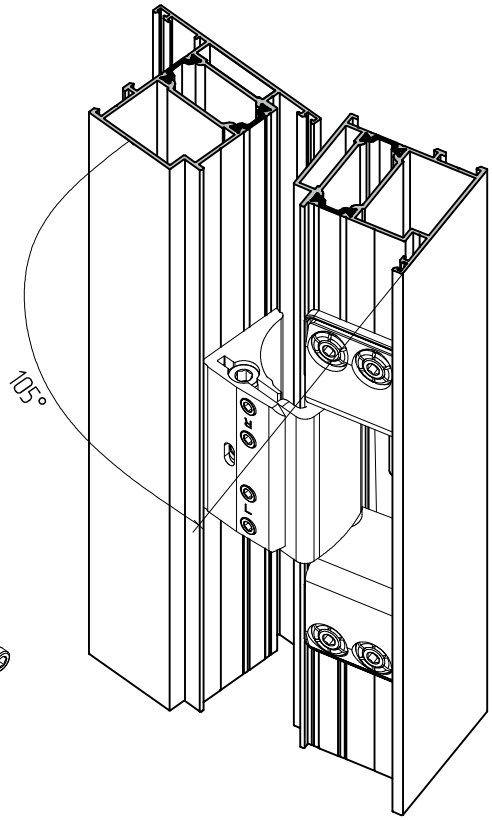

Scheme, installation options and hinges adjustment are shown in mounting instructions.

Dr.Hahn DESIGN·TECHNIK·SERVICE

Examples of installation of handle kit, cylinders and locks for leaf and frame profiles

outside openning

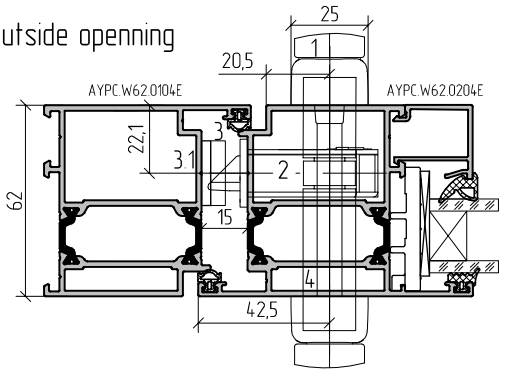

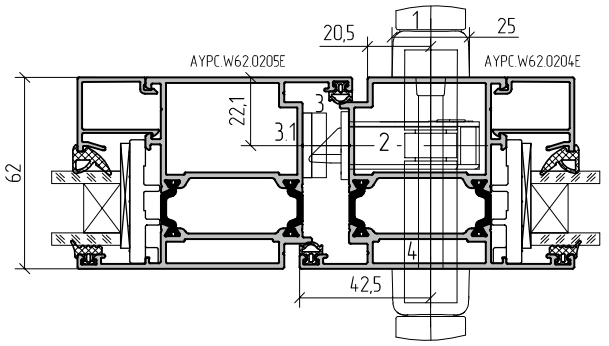

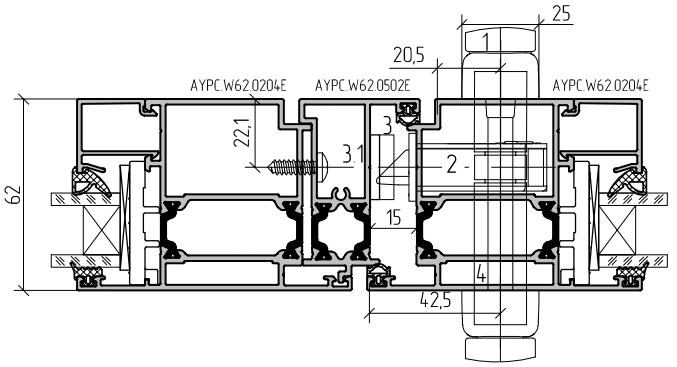

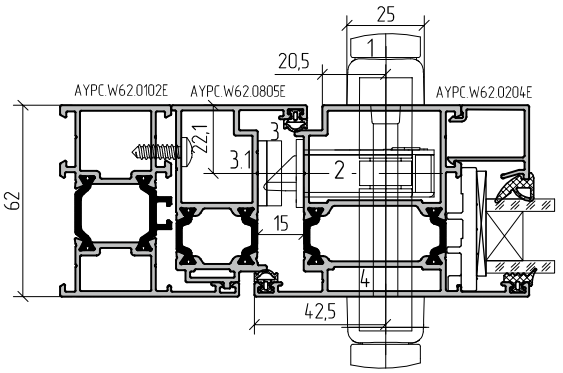

inside openning

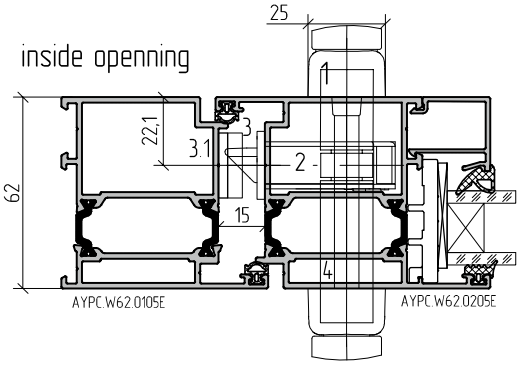

1 – 1022.00 handle kit
250/25/85/8

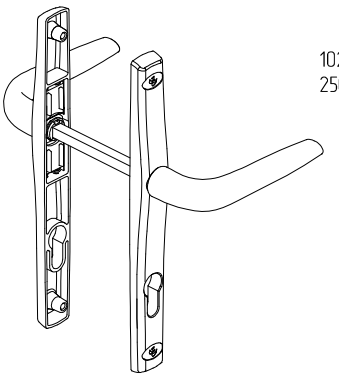

1022.01 handle kit
250/25/85/8

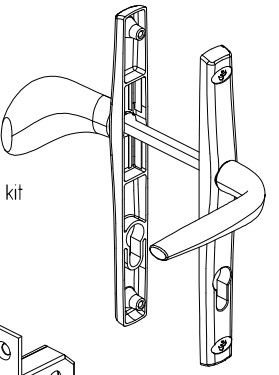

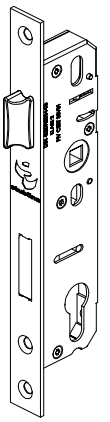

2 – 3021.00 lock
30/22/85/8

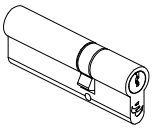

4 – 35/55 5061.00 cylinder
31/51 5056.00 cylinder

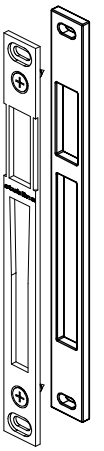

3 – 3016.10 strike plate
3.1 – AYPC.C43.0913 support

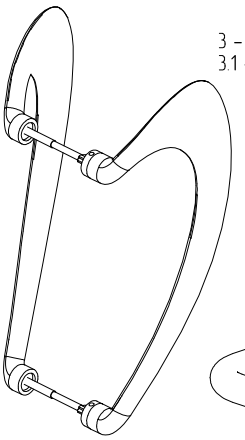

1020.00 pulling handle

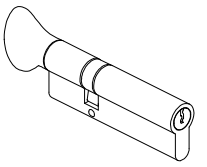

31/51 5104.00 cylinder
35/55 5123.00 cylinder

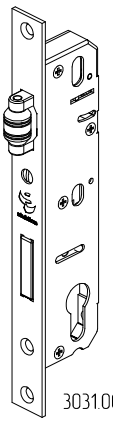

3031.00 lock

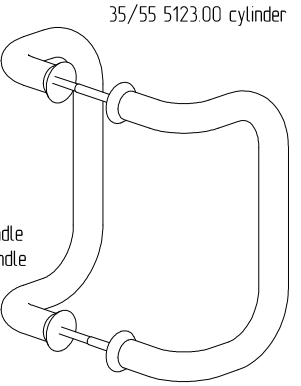

RD 100.300 pulling handle
RD 400.300 pulling handle

3060.00 door latch

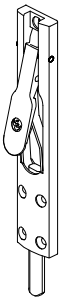

3062.00 door latch

3012.00 Upper strike plate to door latch

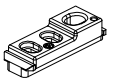

3009.00 Bottom srike plate to door latch

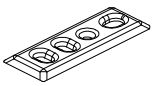

Example of profile Machining for installation of 3021.00 (30/22/85/8) lock, 5056.00 (31/51) cylinder, 1032.00 door handle and 1031.02 cylinder covering plate. Outside opening double door.

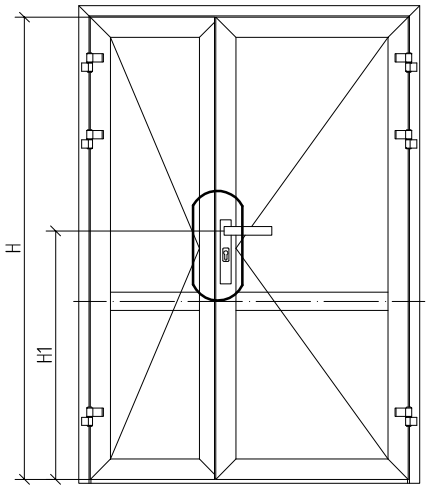

H – leaf height
H1 – dimensions from leaf bottom to handle center

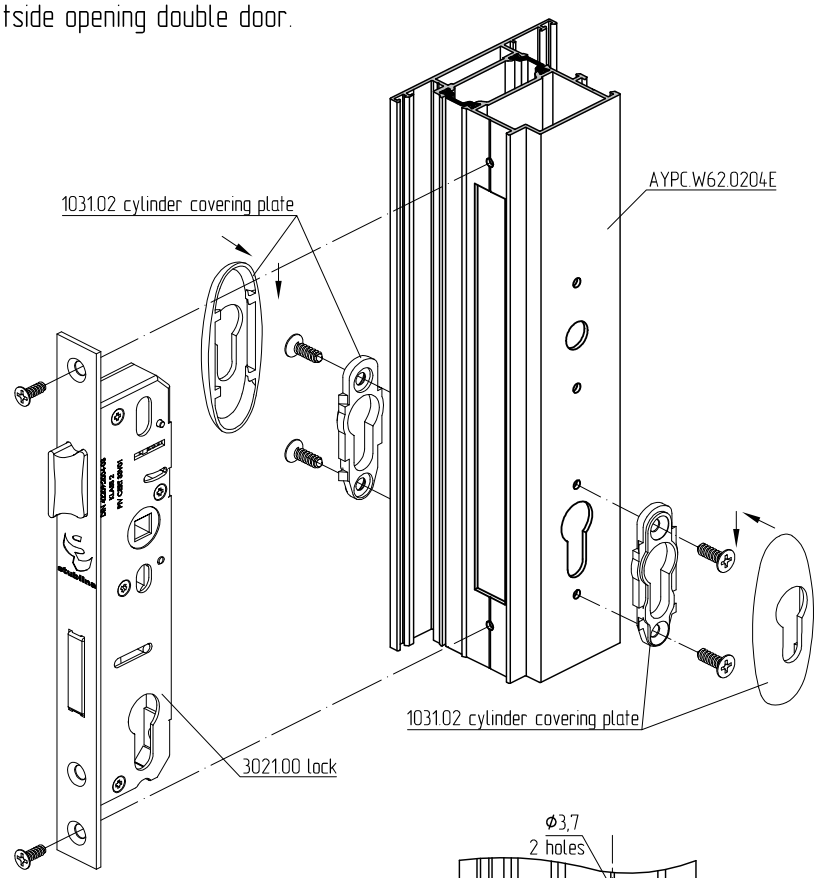

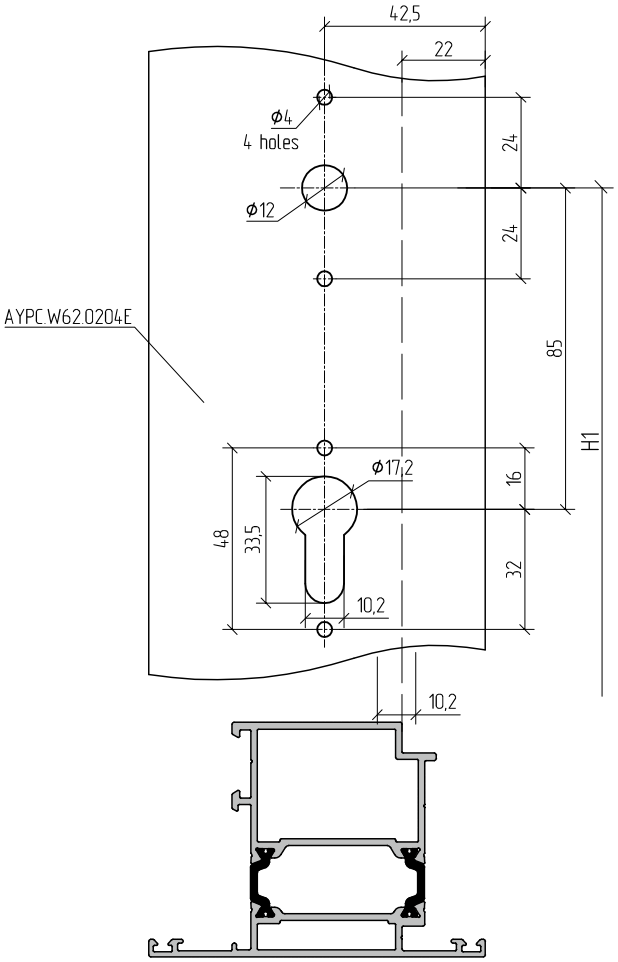

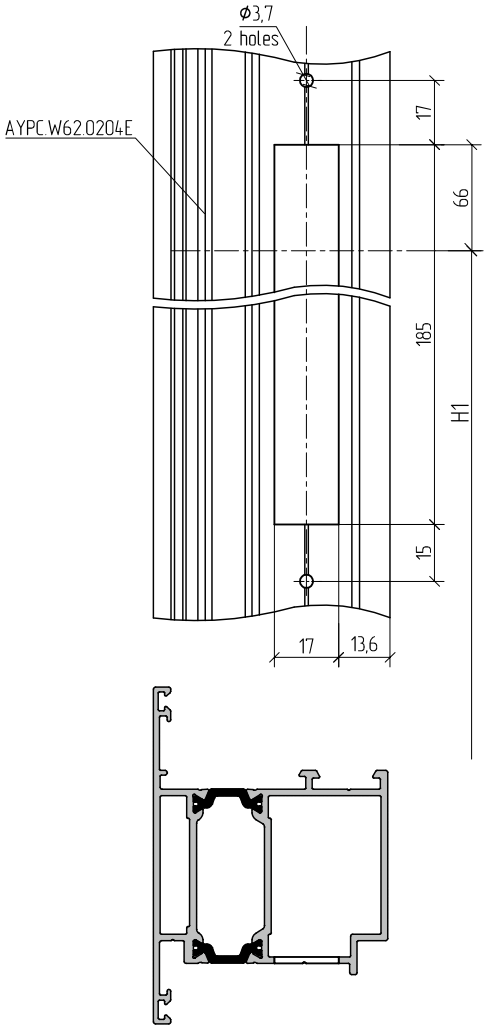

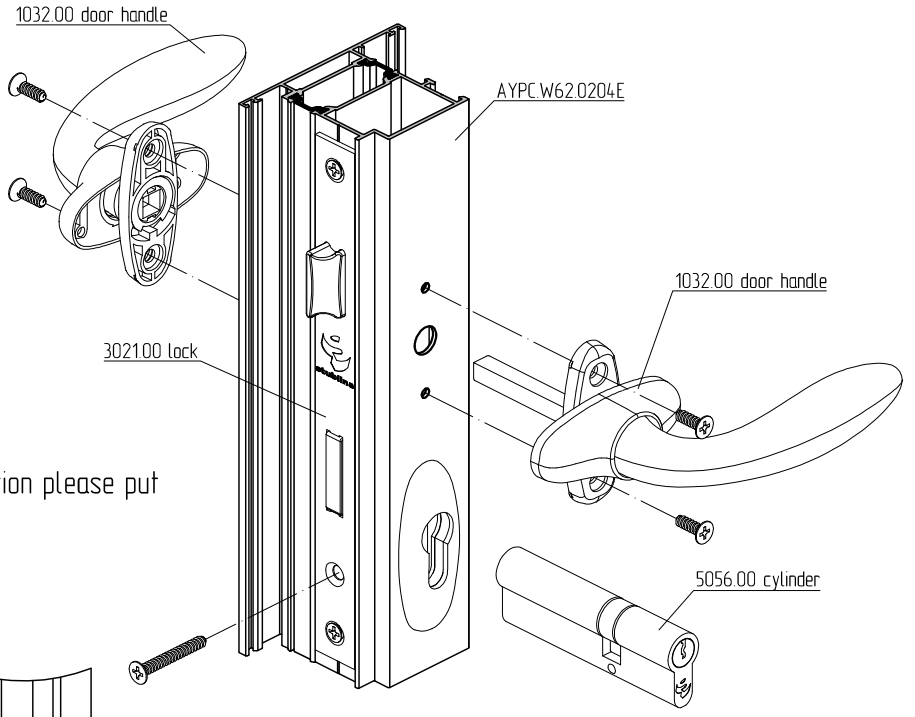

Before cylinder installation please put 1031.02 support.

Example of profile Machining for installation of 3016.10 strike plate.Outside opening double door.

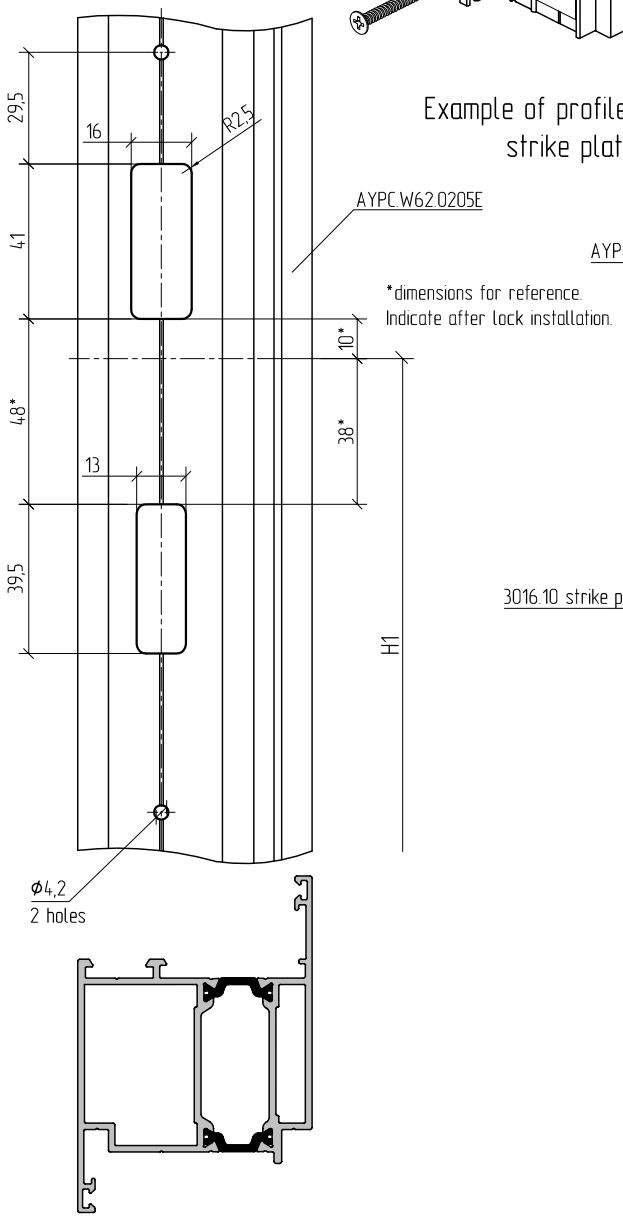

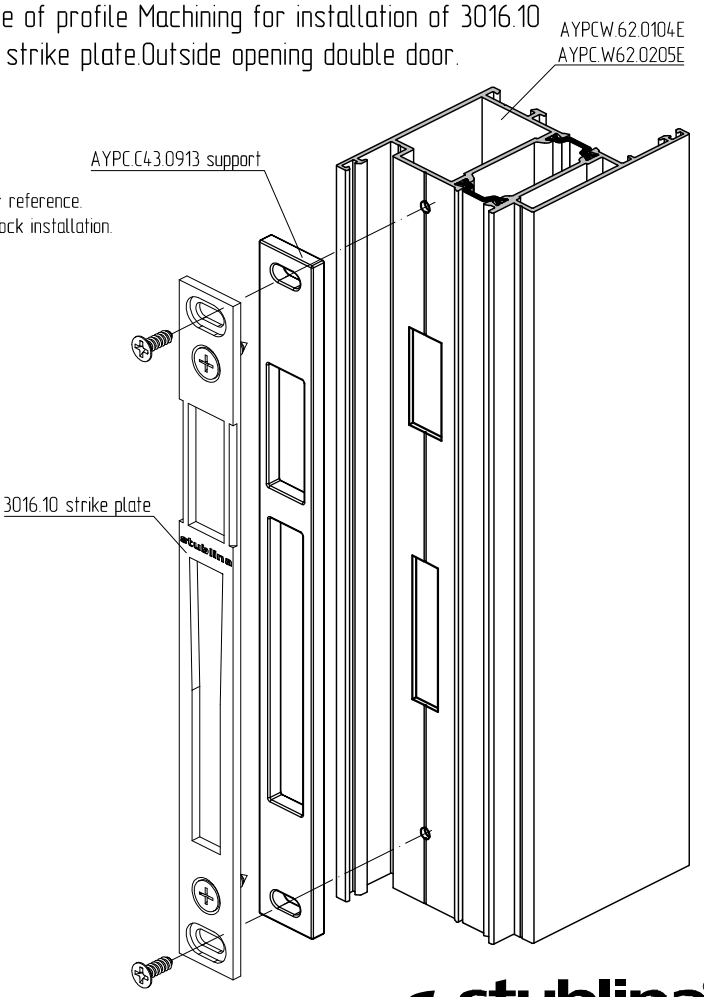

stublina® OpenClose Technology

The ALT W62 system is designed to fabricate windows, doors and frames meeting high requirements to thermal and sound insulation. The range of system profiles allows to use efficiently the materials when designing and assembling windows and doors of various dimensions and purpose.

The distinguishing feature of ALT W62 system is absence of difficult milling operations which is the best way to facilitate the assemblage process, reduce the labor inputs and increase the quality.

AluminTechno JLLC
tel.: +375 17 345 81 43, 45,
fax: +375 17 345 81 48
e-mail: market@alt.by

Certificate № 800017207
issued by the Ministry of Foreign Affairs
of the Republic of Belarus
03.12.2002 № 800017207

ISO 9001:2008
Certified Management System

Licence № 3900

R17120105
01.2017